SITE PLAN
SCALE: 1/32" = 1'-0"

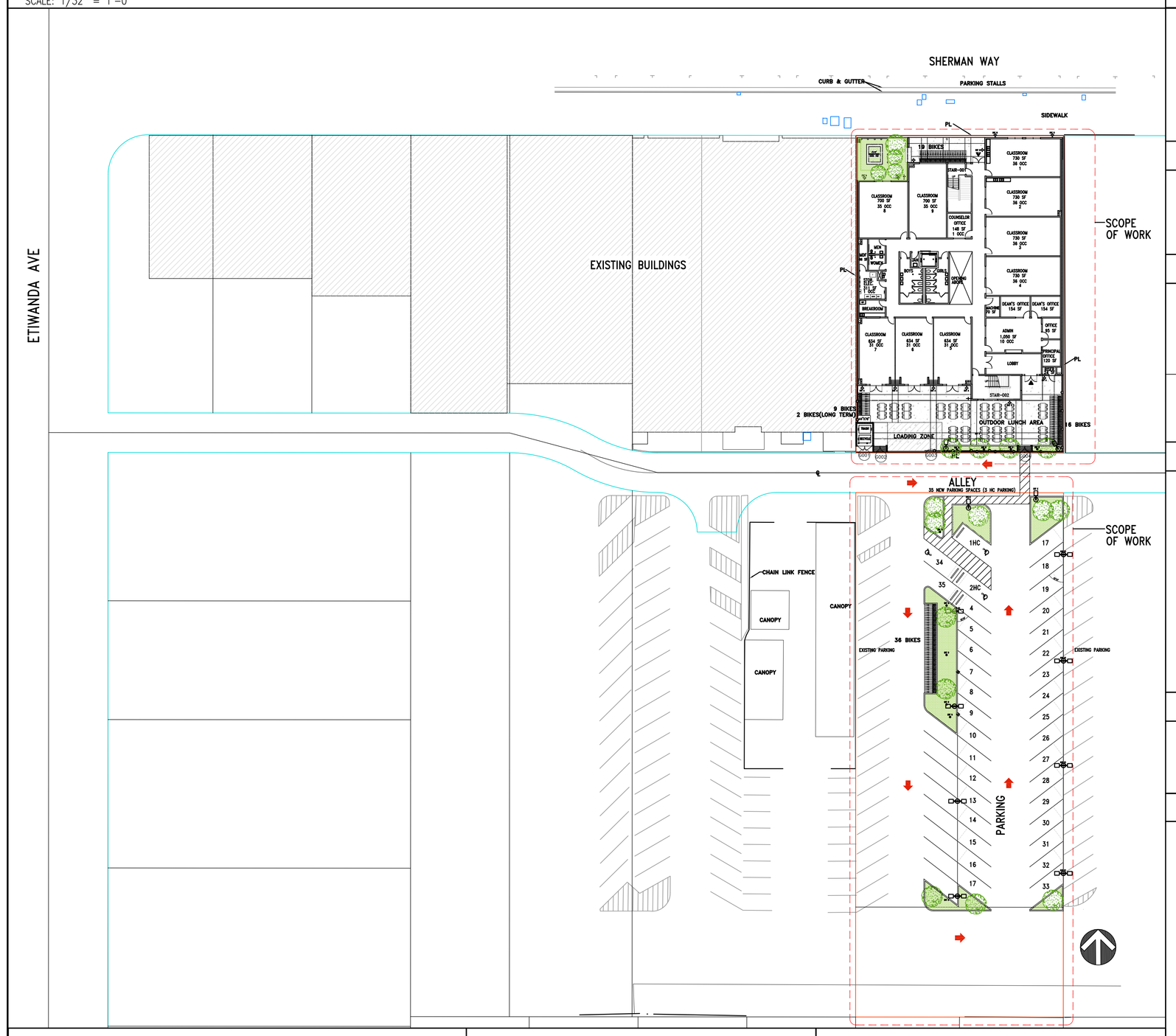

GROUND FLOOR				2ND FLOOR			ROOF		
OCCUPANCY	FLOOR AREA	LOAD FACTOR	OCCUPANT LOAD	FLOOR AREA	LOAD FACTOR	OCCUPANT LOAD	FLOOR AREA	LOAD FACTOR	OCCUPANT LOAD
E	6,654 SF	20	332	7,880 SF	20	394			
B	1,198 SF	100	11	459 SF	100	4			
A-3							6,123 SF (ROOFTOP)	15	408 ROOFTOP
S-2	479 SF	200	2	72	200	0			
TOTAL	8,331 SF		345	2,411 SF		398			408

PROJECT INFORMATION

PROJECT: MAGNOLIA SCIENCE ACADEMY
LOCATION: 18220 SHERMAN WAY, RESEDA, CA91335
BUILDING USE: EDUCATION – 9 THRU 12TH GRADE

APPLICABLE CODES: 2014 CA BUILDING CODE (2014 CBC)
2-STORY BUILDING OCCUPANCY: E OCCUPANCY AND B
CONSTRUCTION TYPE: TYPE III-B, FULLY SPRINKLERED
BUILDING HEIGHT: 45'-0"

SCOPE OF WORK

NEW 2 STORY CLASSROOM BUILDING W/PARTIAL ROOF TOP PLAY AREA

FULLY-SPRINKLERED TWO-STORY BUILDING; 20 CLASSROOMS, INCLUDING SCIENCE LAB; ROOFTOP PLAY AREA

AREA SUMMARY

SITE PLAN SUMMARY

SITE AREA: 16,800 SF
BUILDING FOOT PRINT: 13,140 SF
LOT COVERAGE: 78 %

LOT AREA: 16,800 SF
TOTAL BUILDING GROSS AREA: 24,855 SF
FAR = 24,855 SF / 16,800 SF = 1.48

PARKING SUMMARY

PARKING SUMMARY:

HIGH SCHOOL REQ'D PARKING CALCULATION:

BUILDING GROSS AREA: 25,163 SF
25,163 SF /500 = 50 PARKING SPACES
REQUIRED PARKING SPACES: 35 (30% REDUCTION FOR MASS TRANSIT)

PARKING SPACE PROVIDED
35 PARKING STALLS
(INCLUDING 3HC)

BIKE PARKING SPACES REQUIRED: 80 (20 CLASSROOMS X 4)
BIKE PARKING SPACES PROVIDED: 80
LONG TERM BIKE PARKING SPACES REQUIRED AND PROVIDED: 2

LANDSCAPE SUMMARY

LANDSCAPE AREA:

LANDSCAPE AREA REQUIRED: 21,085 SF X 10% = 2,109 SF
LANDSCAPE AREA PROVIDED: 2,120 SF (10% OF SITE AREA)

PROJECT DIRECTORY

OWNER: MAGNOLIA SCIENCE ACADEMY 1
18238 SHERMAN WAY,
RESEDA, CA 91335
TEL. (818)609-0507

ARCHITECT: FRANCO ARCHITECTS INC.
12345 VENTURA BLVD., SUITE H
STUDIO CITY, CA 91604
TEL. (818) 754-2030 FAX (818) 754-2032

STRUCTURAL ENGINEER: B & B ASSOCIATES INC,
867 N. FAIR OAKS AVE., #100
PASADENA, CA 91103
TEL. (626) 204-1088 FAX (626) 204-1099

ELECTRICAL ENGINEER: KIPUST ENGINEERING INC.
12934 KILLION STREET
SHERMAN OAKS, CA 91401
TEL. (818) 780-5354 FAX (818) 780-7036

MECHANICAL/ PLUMBING ENGINEER: HYLE ENGINEERING
18818 WYANDOTTE STREET
RESEDA, CA 91335
TEL. (818) 996-5069 FAX (818) 996-5675

LANDSCAPE ARCHITECTS: CARTER, ROMANEK LANDSCAPE ARCHITECTS, INC.
11110 OHIO AVENUE, SUITE 204
LOS ANGELES, CALIFORNIA, 90025
TEL. (310) 477-3900
CELL. (310) 386-1035
EMAIL. WAYNE@CARTER-ROMANEK.COM

INDEX TO DRAWINGS

NUMBER	TITLE
	PROJECT INFORMATION
A0.1	DRAWING INDEX, SITE PLAN & LOCATION PLAN
A0.1.1	ALTA SURVEY
	ARCHITECTURAL
A0.2	GENERAL, FIRE DEPARTMENT & DISABLE ACCESS NOTES
A0.2.1	DISABLED ACCESS FORMS
A0.2.2	DISABLED ACCESS FORMS
A0.2.3	DISABLED ACCESS FORMS
A0.2.4	DISABLED ACCESS FORMS
A0.4	BUILDING LIMITATION
A0.4A	BUILDING LIMITATION
A0.5	ENLARGED SITE PLAN
A0.6	PARKING LOT PLAN
GREEN	GREEN BUILDING FORMS AND NOTES
A1.1	GROUND FLOOR CONSTRUCTION PLAN
A1.2	GROUND FLOOR REFLECTED CEILING PLAN
A1.3	GROUND FLOOR POWER & SIGNAL PLAN
A1.4	GROUND FLOOR FURNITURE & EXITING PLAN
A1.5	GROUND FLOOR FINISH PLAN
A2.1	SECOND FLOOR CONSTRUCTION PLAN
A2.2	SECOND FLOOR REFLECTED CEILING PLAN
A2.3	SECOND FLOOR POWER & SIGNAL PLAN
A2.4	SECOND FLOOR FURNITURE PLAN
A2.5	SECOND FLOOR FINISH PLAN
A3.1	THIRD FLOOR/ROOF CONSTRUCTION PLAN
A3.2	THIRD FLOOR/ROOF REFLECTED CEILING PLAN
A3.3	THIRD FLOOR/ROOF POWER & SIGNAL PLAN
A3.4	THIRD FLOOR/ROOF FURNITURE/EXITING PLAN
A3.5	THIRD FLOOR/ROOF FINISH PLAN
A4.0	ELEVATIONS
A4.1	ELEVATIONS
A4.2	ELEVATIONS DETAIL
A5.1	SECTIONS
A5.2	SECTIONS
A5.3	SECTIONS
A5.4	SECTIONS
A6.0	STAIRS PLAN
A6.1	STAIR SECTION
A6.1.A	STAIR SECTION
A6.1.B	STAIR SECTION
A6.2	STAIR SECTIONS AND DETAILS
A6.3	STAIR SECTIONS AND DETAILS
A7.0	ELEVATOR PLANS
A7.1	ELEVATOR SECTIONS AND DETAILS
A7.2	ELEVATOR NOTES AND HC REQUIREMENTS
A8.0	HC NOTES, DETAILS AND RESTROOM SPECIFICATION
A8.1	ENLARGED RESTROOM PLANS AND ELEVATIONS
A8.2	ENLARGED RESTROOM PLANS AND ELEVATIONS
A8.3	TRASH ENCLOSURE
A9.0	CABINETWORK
A9.1	CABINETWORK DETAIL
A9.2	CABINETWORK DETAIL
A9.3	CABINETWORK DETAIL
A9.4	LAB EQUIPMENT SPEC. SHEETS
A10.0	DOOR SCHEDULE
A10.1	DOOR SCHEDULE
A10.2	WINDOW SCHEDULE
D1.0	DETAILS
D2.0	DETAILS
D3.0	DETAILS
D4.0	DETAILS
D5.0	DETAILS
D6.0	DETAILS
D7.0	FOLDING WALL DETAIL
D8.0	PROTO WALL DETAILS LADBS

NUMBER	TITLE
	STRUCTURAL
S0.1	GENERAL NOTES
S0.2	GENERAL NOTES
S1.0	FOUNDATION PLAN
S1.1	SHEAR WALLS AT FIRST FLOOR
S2.0	SECOND FLOOR FRAMING PLAN
S2.1	SHEAR WALLS AT 2ND FLOOR
S3.0	ROOF FRAMING PLAN
S3.1	HIGH ROOF FRAMING PLAN
S4.0	BUILDING SECTION
S4.1	BUILDING SECTION
S4.2	BUILDING SECTION
S4.3	BUILDING SECTION
S5.0	TYPICAL DETAILS
S5.1	TYPICAL DETAILS
S5.2	FOUNDATION DETAILS
S6.0	FLOOR FRAMING DETAILS
S6.1	FLOOR FRAMING DETAILS
S6.2	FLOOR FRAMING DETAILS
S6.3	FLOOR FRAMING DETAILS
S7.0	ROOF FRAMING DETAILS
S7.1	ROOF FRAMING DETAILS
S8.0	STAIR DETAILS
	DRAWING LIST
E0.1	SYMBOLS NOTES
E0.2	SINGLE LINE DIAGRAM
E0.3	PANEL SCHEDULES-1
E0.4	PANEL SCHEDULES-2
E0.5	DETAILS & SWITCHBOARD
E1.1	TITLE 24 INDOORS-1
E1.2	TITLE 24 INDOORS-2
E1.3	TITLE 24 INDOORS-3
E1.4	TITLE 24 OUTDOORS-1
E1.5	TITLE 24 OUTDOORS-2
E1.6	WATTSTOPPER
E2.1	ELECTRICAL SITE PLAN
E3.1	FIRST FLOOR LIGHTING PLAN
E3.2	SECOND FLOOR LIGHTING PLAN
E3.3	ROOF LIGHTING PLAN
E4.1	FIRST FLOOR POWER & SIGNAL PLAN
E4.2	SECOND FLOOR POWER & SIGNAL PLAN
E4.3	ROOF PLAN
E4.4	FIRST FLOOR ELECTRICAL MECHANICAL PLAN
	MECHANICAL/PLUMBING
M1.0	HVAC SCHEDULES AND NOTES
M2.0	GROUND FLOOR HVAC PLAN
M3.0	SECOND FLOOR HVAC PLAN
M4.0	HVAC ROOF PLAN
M5.0	TITLE 24
M6.0	TITLE 24
M6.0	TITLE 24
P1.0	PLUMBING NOTES & SCHEDULES
P2.0	PLUMBING FLOOR PLANS
P3.0	PLUMBING ROOF PLANS
P4.0	PLUMBING ROOF PLANS
	LANDSCAPE
L-0.1	EXISTING TREE SURVEY
L-1.1	IRRIGATION PLAN
L-2.1	PLANTING PLAN
L-3.1	IRRIGATION AND PLANTING DETAILS

MATERIALS

DESCRIPTION	L.A.R.R./ICC-ES
CHICAGO METALLIC CORP. CEILING SUSPENSION SYSTEMS	ICC-ES #ESR-2631
GAF MATERIALS CORP. (ROOF MATERIAL)	ICC-ES #ESR-1274
ANTI-GRAFFITI PAINT (UNFINISHED SURFACE)	#25286T
BITUTHENE WATERPROOFING MEMBRANE	#24386
SIMPSON WEDGE ANCHOR	#20682
3M FIRE BLOCKING FOAM SEALANT	ICC-ES #ESR-3165

SEE STRUCTURAL DRAWINGS FOR ADDITIONAL MATERIAL DESCRIPTIONS AND RESEARCH REPORT NUMBERS.

OCCUPANCY CALCULATIONS FOR DOOR EXITING – GROUND FLOOR

OCCUPANCY: E, B AND S-2 (ACCESSORY USE)
BUILDING USE: EDUCATION

TYPE OF USE	OCCUPANCY TYPE	LOAD
CLASSROOM AREA	E	332
OFFICE/EMPLOYEE AREA	B	11
ELEC. / STOR.	S-2	2
TOTAL		345

REQUIRED EXIT WIDTH PER TABLE 1005.1: $\frac{345 \times 0.2}{12} = 5.77'$

REQUIRED NUMBER OF EXITS PER TABLE 1019.1
2 (OCCUPANCY LOAD ON GROUND FLOOR < 500)

REQUIRED EXIT WIDTH: 2X3'=6'
PROVIDED EXIT WIDTH: 12'

PROVIDED NUMBER OF EXITS
2 (2 EXITS MORE THAN 1/3 OF MAX. OVERALL DIAG. DIMENSION OF THE AREA SERVED PER 1015.2.1)

OCCUPANCY CALCULATIONS FOR STAIR EXITING-2ND FLOOR

OCCUPANCY: E (ACCESSORY USE: B AND S-2)
BUILDING USE: EDUCATION

TYPE OF USE	OCCUPANCY TYPE	LOAD
CLASSROOM AREA	E	394
OFFICE/EMPLOYEE AREA	B (ACCESSORY USE)	4
MDF	S-2	0
TOTAL		398

REQUIRED STAIRWAY WIDTH PER TABLE 1005.1: $\frac{398 \times 0.3}{12} = 9.95'$

REQUIRED NUMBER OF STAIRS PER TABLE 1021.1
2 (OCCUPANCY LOAD < 500)

PROVIDED STAIRWAY WIDTH
5'-3" X 2 = 10'-6"

PROVIDED NUMBER OF STAIRS
2 (2 STAIRS MORE THAN 1/3 OF MAX. OVERALL DIAG. DIMENSION OF THE AREA SERVED PER 1015.2.1)

OCCUPANCY CALCULATIONS FOR STAIR EXITING-ROOF

OCCUPANCY: A-3
BUILDING USE: EDUCATION

TYPE OF USE	OCCUPANCY TYPE	LOAD
PATIO	A-3	408
TOTAL		408

REQUIRED STAIRWAY WIDTH PER TABLE 1005.1: $\frac{408 \times 0.3}{12} = 10.2'$

REQUIRED NUMBER OF STAIRS PER TABLE 1021.1
2 (OCCUPANCY LOAD < 500)

PROVIDED STAIRWAY WIDTH
5.25' X 2 = 10.5'

PROVIDED NUMBER OF STAIRS
2 (2 STAIRS MORE THAN 1/3 OF MAX. OVERALL DIAG. DIMENSION OF THE AREA SERVED PER 1015.2.1)

TOTAL OCCUPANT LOAD OF THE BUILDING = 1,151

TOTAL NET AREA FOR E (TWO FLOORS)
(NET AREA – AREA THAT NOT INCLUDES CORRIDORS, RESTROOMS AND OCCUPANCY S AREA) 6,654 SQ.FT. + 7,880 SQ. FT. = 14,534 SQ.FT.

TOTAL AREA FOR A-3 OCCUPANCY (NOT INCLUDING OUTDOOR PATIO) 0 SQ.FT.

TOTAL AREA FOR B OCCUPANCY (TWO FLOORS) 1,198+459=1,657 SQ.FT.

LEGAL DESCRIPTION

REFER TO LEGAL DESCRIPTION ON A0.1.1

RESTROOM CALCULATIONS

OCCUPANCY GROUP		E OCCUPANCY		A-3 OCCUPANCY (EDUCATIONAL AND ACTIVITY)		B OCCUPANCY	
NET AREA		15,534 SQ.FT.		6,123 SQ.FT.		1,657	
OCCUPANCY FACTOR		1/50 SF		1/30 SF		1/200 SF	
		310		204		8	
		BOYS	GIRLS	BOYS	GIRLS	MEN	WOMEN
OCCUPANTS		155	155	102	102	4	4
FIXTURE FACTORS	WATER CLOSET	1:50	1:30	1: 1-100	1: 26-50	1:1-50	1:1-15
	URINAL	1:100	–	1: 1-100	–	1:100	–
	LAVATORIES	1:40	1:40	1: 1-200	1: 1-100	1:75	1:50
REQUIRED FIXTURES	WATER CLOSET	3	5*	1	2*	1	2*
	URINAL	2	–	1	–	1	–
	LAVATORIES	4	4	1	1	1	1
PROVIDED	WATER CLOSET	6	10	1	2	2	2*
	URINAL	4	–	1	–	0	–
	LAVATORIES	6	6	1	1	2	2

* PLUMBING FIXTURES SHALL BE PROVIDED IN ACCORDANCE WITH CHAPTER 4 OF THE COUNTY OF OF LOS ANGELES PLUMBING CODE

* THE TOTAL NUMBER OF WATER CLOSETS FOR FEMALES SHALL BE AT LEAST EQUAL TO THE TOTAL NUMBER OF WATER CLOSETS AND URINALS REQUIRED FOR MALES. THIS REQUIREMENT SHALL NOT APPLY TO RETAIL OR WHOLESALE STORES.

FOR EACH URINAL ADDED IN EXCESS OF THE MINIMUM REQUIRED, ONE WATER CLOSET MAY BE DEDUCTED. THE NUMBER OF WATER CLOSETS SHALL NOT BE REDUCED TO LESS THAN TWO-THIRDS OF THE MINIMUM REQUIREMENTS.

REQUIRED DRINKING FOUNTAIN: ONE PER FLOOR
PROVIDED DRINKING FOUNTAIN: INDOOR: TWO PER FLOOR

FIRE DEPT.

NOTE:
THE ALARM SHALL BE PROVIDED PER SECTION 907.2.3 OF CFC OCCUPANCY. NOTIFICATION SIGNAL SHALL BE VIA EMERGENCY VOICE/ALARM COMMUNICATION SYSTEM, MEETING THE REQUIREMENT OF SECTION 907.5.2.2

NOTE

ALL SUBCONTRACTORS TO FAMILIARIZE THEMSELVES WITH ENTIRE CONSTRUCTION DOCUMENT SET. WHERE CONFLICTS ARISE THE MOST RESTRICTIVE REQUIREMENT APPLIES. NO SUBSTITUTIONS ALLOWED UNLESS APPROVED BY ARCHITECT AND/OR OWNER OR AS SPECIFICALLY NOTED ON DRAWINGS.

UNDER SEPARATE PERMIT:
GRADING WORK, FIRE SPRINKLER SYSTEMS, STRUCTURAL, ELECTRICAL, MECHANICAL AND PLUMBING WORK.

VICINITY MAP

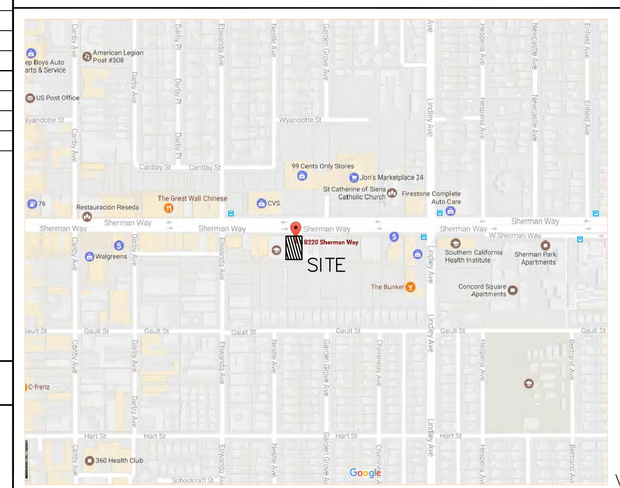

VICINITY MAP
NO SCALE

FRANCO ARCHITECTS INC.
12345 Ventura Blvd. H
Studio City, CA 91604
Tel 818 754-2030
Fax 818 754-2032
Architecture and Planning

MAGNOLIA SCIENCE ACADEMY
18220 SHERMAN WAY, RESEDA, CA91335

REV	DESCRIPTION	DATE
	PLAN CHECK #1	6/14/2017

LICENSED ARCHITECT
JOHANN D. WANG
C27010
4/30/2019
RENEWAL DATE
STATE OF CALIFORNIA

PROJECT: MAGNOLIA SCIENCE ACADEMY
PROJECT ADDRESS: 18220 SHERMAN WAY, RESEDA, CA91335
DRAWING TITLE: DRAWING INDEX, SITE PLAN & LOCATION PLAN
DRAWN BY:
ISSUE DATE: 6/14/2017
JOB NUMBER:
DRAWING SCALE: AS NOTED
APPROVED BY:
DRAWING NUMBER: A0.1

1 ABBREVIATIONS

Abbreviation	Meaning
&	AND
∠	ANGLE
@	AT
℄	CENTERLINE
(E)	EXISTING
A.B.	ANCHOR BOLT
ACOUS.	ACOUSTIC, ACOUSTICAL
ASPH.	ASPHALT
A/C	AIR CONDITIONING
ADJ.	ADJUSTABLE
AGGR.	AGGREGATE
A.F.F.	ABOVE FINISH FLOOR
AL.	ALUMINUM
ARCH.	ARCHITECTURE
ANOD.	ANODIZED
BD.	BOARD
BLDG.	BUILDING
BLK.	BLOCK
BM.	BEAM
BOTT.	BOTTOM
CAB.	CABINET
C.B.	CATCH BASIN
CEM.	CEMENT
C.I.	CAST IRON
CLG.	CEILING
COL.	COLUMN
COMP.	COMPOSITION
CONC.	CONCRETE
CONT.	CONTINUOUS
C.T.	CERAMIC TILE
CTR.	CENTER
CTSK.	COUNTERSINK
D.F.	
DET.	DETAIL
DIA.	DIAMETER
DIAG.	DIAGONAL
DIM.	DIMENSION
DISP.	DISPENSER
DN.	DOWN
DR.	DOOR
DWG.	DRAWING
E.	EAST
EA.	EACH
E.B.	EXPANSION BOLT
ELEC.	ELECTRIC
ELEV.	ELEVATOR, ELEVATION
EQ.	EQUAL
EQUIP.	EQUIPMENT
EXH.	EXHAUST
EXP.	EXPANSION
EXT.	EXTERIOR
F.D.	FLOOR DRAIN
F.E.	FIRE EXTINGUISHER
F.E.C.	FIRE EXTINGUISHER CABINET
F.H.	FIRE HYDRANT
F.H.C.	FIRE HOSE CABINET
FIN.	FINISH
FL.	FLOOR
F.N.D.	FEMININE NAPKIN DISPENSER
F.N.R.	FEMININE NAPKIN RECEPTACLE
F.O.F.	FACE OF FINISH
F.O.S.	FACE OF STUD
FT.	FOOT
FTG.	FOOTING
GA.	GAUGE
GALV.	GALVANIZED
G.I.	GALVANIZED IRON
GR.	GRADE
GYP.	GYPSUM
HDR.	HEADER
H.B.	HOSE BIB
HDWD.	HARDWOOD
HGT.	HEIGHT
HORIZ.	HORIZONTAL
H.M.	HOLLOW METAL
HR.	HOUR
I.D.	INSIDE DIAMETER
INSUL.	INSULATION
INT.	INTERIOR
J.C.	JANITOR CLOSET
JST.	JOIST
JT.	JOINT
LAM.	LAMINATE
LAV.	LAVATORY
LT.	LIGHT
MAX.	MAXIMUM
M.C.B.	METAL CASING BEAD
MTL.	METAL
MFR.	MANUFACTURER
MIN.	MINIMUM
MISC.	MISCELLANEOUS
N.	NORTH
N.I.C.	NOT IN CONTRACT
NO.	NUMBER
N.T.S.	NOT TO SCALE
O.A.	OVER ALL
OBS.	OBSCURE
O.C.	ON CENTER
O.D.	OUTSIDE DIAMETER
OPG.	OPENING
OPP.	OPPOSITE
PERF.	PERFORATED
PL.	PLATE
P.LAM.	PLASTIC LAMINATE
P.C.P.	PORTLAND CEMENT PLASTER
PNT.	PAINT
PT.	POINT
P.T.D.	PAPER TOWEL DISPENSER
PTN.	PARTITION
PLYWD.	PLYWOOD
P.V.C.	POLY VINYL CHLORIDE
R.	RISER
R.A.	RETURN AIR
RCPTR.	RECEPTOR
R.D.	ROOF DRAIN
REF.	REFRIGERATOR
REG.	REGISTER
REQD.	REQUIRED
RESL.	RESILIENT
RFG.	ROOFING
RM.	ROOM
R.O.	ROUGH OPENING
RDWD.	REDWOOD
S.	SOUTH
S.C.	SOLID CORE
S.C.D.	SEAT COVER DISPENSER
S.D.	SOAP DISPENSER
SECT.	SECTION
SHT.	SHEET
SIM.	SIMILAR
SQ.	SQUARE
S.SK.	SERVICE SINK
S.S.	STAINLESS STEEL
STL.	STEEL
STD.	STANDARD
STOR.	STORAGE
STR.	STRUCTURAL
SUSP.	SUSPENDED
SYM.	SYMMETRICAL
T.	TOILET
T.C.	TOP OF CURB
T.O.C.	TOP OF CONCRETE
TEL.	TELEPHONE
T.O.G.	TOP OF GRADE
THR.	THRESHOLD
T&G	TONGUE AND GROOVE
T.PTN.	TOILET PARTITION
T.T.D.	TOILET TISSUE DISPENSER
TV.	TELEVISION
TYP.	TYPICAL
U.	URINAL
U.O.N.	UNLESS OTHERWISE NOTED
V.T.	VINYL TILE
VERT.	VERTICAL
W.	WEST
W/	WITH
W.C.	WATER CLOSET
WD.	WOOD
W.GL.	WIRE GLASS
W.W.M.	WELDED WIRE MESH
W/O	WITHOUT
WP.	WATERPROOFING

2 GENERAL NOTES

1. THE GENERAL CONTRACTOR SHALL PROVIDE AND INSTALL ALL MATERIALS REQUIRED TO COMPLETE THE CONSTRUCTION OF THE PROJECT IN ACCORDANCE WITH THE TERMS AND CONDITIONS OF THE OWNER/CONTRACTOR AGREEMENTS AND IN CONFORMANCE WITH THE GOVERNING CODES AND ORDINANCES HAVING JURISDICTION OVER THE PROJECT.
2. CONTRACT WORK SHALL COMPLY WITH THE FOLLOWING CODES: 2013 CALIF. CODE AND CALIFORNIA ADMINISTRATIVE CODE TITLE 24. WORK THAT IS NOT IN COMPLIANCE WITH APPLICABLE CODES AND INSPECTIONS SHALL BE CORRECTED AT GENERAL CONTRACTORS OWN EXPENSE AND AT NO EXPENSE TO THE OWNER.
3. THE GENERAL CONTRACTOR AND SUBCONTRACTOR(S) SHALL PURCHASE AND MAINTAIN CERTIFICATE OF INSURANCE WITH RESPECT TO WORKMAN'S COMPENSATION, PUBLIC LIABILITY AND PROPERTY DAMAGE FOR THE LIMITS AS REQUIRED BY LAW. THE GENERAL CONTRACTOR SHALL BE RESPONSIBLE FOR INITIATING, MAINTAINING, AND SUPERVISING ALL SAFETY AND SECURITY PRECAUTIONS IN CONNECTION WITH THE WORK.
4. THE GENERAL CONTRACTOR SHALL PROVIDE PROTECTION DURING CONSTRUCTION IN ACCORDANCE WITH 2013 CALIFORNIA CODE.
5. THE GENERAL CONTRACTOR SHALL APPLY FOR AND OBTAIN, AT THE CONTRACTOR'S SOLE EXPENSE, ALL NECESSARY CONSTRUCTION PERMITS REQUIRED BY APPLICABLE BUILDING CODES AND REGULATORY CITY AND STATE AGENCIES.
6. THE GENERAL CONTRACTOR IS RESPONSIBLE FOR ANY AND ALL OVERTIME COSTS UNLESS OTHERWISE AGREED UPON IN WRITING.
7. THE GENERAL CONTRACTOR SHALL BE LIABLE FOR REPAIRING ANY DAMAGES CAUSED TO THE EXISTING CONSTRUCTION TO REMAIN, CAUSED BY THE GENERAL CONTRACTOR OR ANY OF HIS SUBCONTRACTORS.
8. THE GENERAL CONTRACTOR SHALL PROVIDE AND INSTALL MATERIALS AS REQUIRED FOR "FIRE PROTECTION" COMPLIANCE.
9. THE DRAWINGS AND SPECIFICATIONS CONSTITUTE ONLY A PART OF THE CONTRACT DOCUMENTS AS IDENTIFIED IN THE OWNER/CONTRACTOR AGREEMENT. THE CONTRACTOR IS ALSO RESPONSIBLE FOR REQUIREMENTS SET FORTH IN THE OTHER INSTRUMENTS OF THE OWNER/CONTRACTOR AGREEMENT. DISCREPANCIES IN THE DOCUMENTS SHALL BE REPORTED TO THE ARCHITECT AT ONCE FOR RESOLUTION.
10. CONSULTANT WORK THAT IS NOT A PART OF THESE CONTRACT DOCUMENTS HAS NOT BEEN COORDINATED BY THE ARCHITECT. CONTRACTOR SHALL NOTIFY THE ARCHITECT OF ANY DISCREPANCIES THAT PREVENT EXECUTION OF THE WORK COVERED BY THESE DOCUMENTS.
11. THE GENERAL CONTRACTOR SHALL VERIFY EXISTING CONDITIONS AND DIMENSIONS AT THE PROJECT SITE PRIOR TO BID SUBMITTAL AND START OF CONSTRUCTION. CONTRACTOR SHALL NOTIFY THE ARCHITECT OF ANY DISCREPANCIES FOR CLARIFICATIONS.
12. THE GENERAL CONTRACTOR SHALL NOT SCALE DRAWINGS. PLAN DIMENSIONS ON DRAWINGS ARE SHOWN TO CENTER LINES OF COLUMNS AND FINISH FACE OF WALLS AND PARTITIONS UNLESS NOTED OTHERWISE. HEIGHT DIMENSIONS ARE DIMENSIONED FROM TOP OF EXISTING SLAB UNLESS NOTED "A.F.F." (ABOVE FINISHED FLOOR). DIMENSIONS ARE NOT ADJUSTABLE WITHOUT REVIEW FROM THE ARCHITECT.
13. THE GENERAL CONTRACTOR SHALL BE RESPONSIBLE FOR CORRECTIONS OF WORK AT HIS OWN EXPENSE, FOR WORK INSTALLED IN CONFLICT WITH THE CONTRACT DOCUMENTS.
14. UPON AWARD OF THE CONTRACT, THE GENERAL CONTRACTOR SHALL PREPARE AND SUBMIT TO THE ARCHITECT A CONSTRUCTION PROGRESS SCHEDULE. THE CONSTRUCTION SCHEDULE SHALL BE CONTINUOUSLY UPDATED AND POSTED AT THE JOB SITE AT ALL TIMES.
15. THE GENERAL CONTRACTOR SHALL PROVIDE MECHANICAL AND ELECTRICAL LAYOUTS AND CUT SHEETS FOR MATERIALS THAT IMPACT FINISH DESIGN APPEARANCE, FOR ARCHITECT'S REVIEW AND RETURN.
17. THE GENERAL CONTRACTOR SHALL MAKE SHOP DRAWINGS AND SAMPLE SUBMITTALS IN ACCORDANCE WITH AIA GENERAL CONDITIONS A201 AND THE REQUIREMENTS OF THE CONSTRUCTION DRAWINGS AND SPECIFICATIONS.
18. THE GENERAL CONTRACTOR SHALL COORDINATE WITH OTHER CONTRACTORS DIRECTLY AND SEPARATELY EMPLOYED BY THE OWNER FOR TIMELY STORAGE AND INSTALLATION OF THEIR PRODUCT(S).
19. SUBSTITUTIONS, REVISIONS AND/OR CHANGES MUST HAVE PRIOR APPROVAL BY THE ARCHITECT.
20. THE GENERAL CONTRACTOR SHALL MAINTAIN THE PREMISES CLEAN AND FREE OF ALL TRASH AND DEBRIS AND SHALL PROTECT ALL WORK FROM DAMAGE, SOILING, PAINT OVERSPRAY, ETC. ALL FIXTURES, EQUIPMENT, GLAZING, FLOORS, ETC. SHALL BE LEFT CLEAN AND READY FOR OCCUPANCY (INCLUDING EXISTING STOREFRONT GLAZING AND MULLIONS, BOTH INTERIOR AND EXTERIOR AND SPACE FRAME).
21. ALL CONSTRUCTION SHOWN AS EXISTING HAS BEEN REDRAWN FROM DOCUMENTS PREPARED BY OTHERS. FOR ADDITIONAL INFORMATION REGARDING THE BASE BUILDING CONSTRUCTION REFER TO THE APPROPRIATE PLANS AND SPECIFICATIONS. ANY DISCREPANCIES BETWEEN THESE DOCUMENTS AND THOSE FOR THE BASE BUILDING MUST BE BROUGHT TO THE ATTENTION OF THE ARCHITECT FOR RESOLUTION.
22. "TYPICAL" OR "TYP." MEANS IDENTICAL FOR ALL SIMILAR CONDITIONS, UNLESS OTHERWISE NOTED. "SIMILAR" OR "SIM." MEANS COMPARABLE CHARACTERISTICS TO THE ELEVATION OR DETAIL NOTED. VERIFY DIMENSIONS AND ORIENTATION OF THE PLAN.
23. FIRE RESISTANT CONSTRUCTION REQUIREMENTS SET FORTH IN THE 2010 CALIFORNIA CODE SHALL BE ADHERED TO; OCCUPANCY SEPARATIONS AND OPENINGS IN SEPARATIONS SHALL CONFORM.
24. SOUND RATED WALLS SHALL ACOUSTICALLY SEAL WALLS TOP AND BOTTOM AND AT ANY OTHER WALL PENETRATIONS FOR PIPES, DUCTS, ETC. SOUND RATED CEILINGS SHALL COVER BACK CONCEALED OR RECESSED FIXTURES WITH A SOUND ATTENUATION BLANKET.
25. ALL INSULATION SHALL BE INCOMBUSTIBLE.
26. THE GENERAL CONTRACTOR SHALL PROVIDE AND INSTALL ROUGH PLUMBING AND FINAL HOOK-UP FOR ALL SPECIFIED FIXTURES AND APPLIANCES, AND SHALL SUPPLY AND INSTALL ALL SUCH FIXTURES AND APPLIANCES (U.O.N.). WHERE REQUIRED, PROVIDE MINIMUM ADDITIONAL PARTITION THICKNESS FOR FURRING AND PLUMBING WALLS, AND SUPPORT FOR FIXTURE CARRIERS.
27. THE GENERAL CONTRACTOR SHALL CHECK AND VERIFY SIZE AND LOCATION OF DUCT OPENINGS AND PLUMBING RUNS WITH MECHANICAL CONTRACTOR BEFORE FRAMING WALL AND CEILING. DUCT OPENINGS IN FIRE RATED WALLS SHALL HAVE APPROVED FIRE DAMPERS. SEAL BETWEEN DUCT AND WALL/CEILING PENETRATIONS WHERE REQUIRED.
28. THE GENERAL CONTRACTOR SHALL COORDINATE WITH THE ARCHITECT THE LOCATION OF ACCESS PANELS FOR MECHANICAL DUCT WORK, PLUMBING, AND ELECTRICAL WORK AS REQUIRED BY CODE. THE GENERAL CONTRACTOR SHALL PROVIDE AND INSTALL ACCESS PANELS ACCORDING TO PLANS OR SHALL BE REQUIRED TO OBTAIN ARCHITECT'S APPROVAL PRIOR TO INSTALLATION. ACCESS PANELS SHALL BE FINISHED TO MATCH ADJACENT SURFACES (U.O.N.) AND SHALL MEET ALL SECURITY, SOUND, AND FIRE RATING REQUIREMENTS APPLICABLE TO THE WALL/CEILING CONSTRUCTION INTO WHICH THEY ARE INSTALLED.
29. THE CONTRACTOR SHALL PROVIDE AND INSTALL ALL NECESSARY BLOCKING, STIFFENERS, BRACING, FRAMING, HANGERS OR OTHER SUPPORT FOR ALL FIXTURES, EQUIPMENT, CABINETRY, FURNISHINGS AND OTHER ITEMS REQUIRING THE SAME.
30. ALL CABINETRY TO BE CONSTRUCTED, FINISHED AND INSTALLED IN ACCORDANCE WITH THE STANDARDS OF THE WOODWORKING INSTITUTE OF CALIFORNIA. THE GENERAL CONTRACTOR SHALL SUBMIT SHOP DRAWINGS AND SAMPLES FOR REVIEW, AND SHALL BE APPROVED IN WRITING BEFORE COMMENCEMENT OF RELATED WORK.
31. CONTRACTOR SHALL PROVIDE 3/4" FIRE TREATED PLYWOOD BACKBOARD REQUIRED IN TELEPHONE AND ELECTRICAL EQUIPMENT ROOMS AS DOCUMENTED ON THE ELECTRICAL DRAWINGS.
32. ALL INTERIOR WALL AND CEILING FINISHES SHALL COMPLY WITH CHAPTER 8 OF THE 2010 CALIFORNIA BUILDING CODE.
33. GLASS DOORS, ADJACENT PANELS AND ALL GLAZED PANELS WITHIN 18" OF THE ADJACENT FLOOR SHALL BE OF GLASS APPROVED FOR IMPACT HAZARD.
34. ELECTRICAL, TELEPHONE AND COMMUNICATIONS OUTLETS AND/OR FURNITURE PARTITION CONNECTIONS SHALL BE PROVIDED AS INDICATED ON THE PLANS.
35. CONTRACTOR SHALL MAKE ARRANGEMENTS WITH THE OWNER/PROPERTY MANAGER FOR PARKING ACCESS, SECURITY ACCESS, MATERIAL STORAGE, AND WASTE DUMPSTER LOCATION ON THE CONSTRUCTION SITE.
36. CONTRACTOR SHALL PROVIDE TO THE OWNER ONE SET OF REPRODUCIBLE AS-BUILTS FOR ARCHITECTURAL, MECHANICAL AND ELECTRICAL WORK. ADDITIONAL SITE WORK, SECURITY SYSTEMS, CONTROL SYSTEMS AND COMMUNICATIONS SYSTEMS WORK PERFORMED BY THE CONTRACTOR(S) SHALL ALSO BE DOCUMENTED IN AS-BUILT DRAWINGS TO BE SUBMITTED TO THE OWNER. AS-BUILT DRAWINGS TO BE COMPUTER-BASED DOCUMENTS PROVIDED ON COMPUTER-BASED MEDIA (DISKS).
37. CONTRACTOR SHALL BE RESPONSIBLE TO FINAL CLEAN THE SPACE.
38. CONTRACTOR SHALL NOT PERMIT SMOKING ON SCHOOL CAMPUS.
39. CONTRACTOR SHALL PROVIDE WARRANTIES AND MANUALS FOR ALL EQUIPMENT AND PRODUCTS INSTALLED ON THE PROJECT WHERE SUPPLIED BY THE MANUFACTURER OF SAID EQUIPMENT OR PRODUCTS.
40. CONTRACTOR SHALL INSPECT SUBFLOOR TO INSURE IT IS LEVEL AND FREE OF DIPS, DIMPLES AND JOINTS THAT WOULD SHOW THROUGH ON FINISH INSTALLATION. THE GENERAL CONTRACTOR SHALL NOTIFY OWNER IF THERE ARE PROBLEMS PRIOR TO COMMENCEMENT OF NEW CONSTRUCTION.
41. EXISTING WALLS AND SURFACES TO REMAIN, IF DAMAGED, SHALL BE REPAIRED AND REFINISHED TO MATCH ADJACENT QUALITY LEVEL AND TYPE.
42. OPEN EXTERIOR JOINTS AROUND WINDOW AND DOOR FRAMES, BETWEEN WALLS AND FOUNDATIONS, BETWEEN WALLS AND ROOF, BETWEEN WALL PANELS, AT PENETRATIONS OF UTILITIES THRU THE ENVELOPE, SHALL BE SEALED, CAULKED, OR WEATHER-STRIPPED TO LIMIT AIR LEAKAGE.
43. BUILDING SHALL NOT BE OCCUPIED DURING WORK WHERE:
    A. THE BUILDING STRENGTH IS SUBSTANTIALLY WEAKENED DURING ANY WORK.
    B. REQUIRED EXITS ARE NOT AVAILABLE OR ARE OBSTRUCTED.
    C. REQUIRED FIRE SAFETY DEVICES SUCH AS STANDPIPES & ALARM SYSTEMS ARE NOT OPERATIONAL.
44. THE CONTRACTOR WILL SECURE THE NECESSARY PERMITS FROM THE PUBLIC WORKS AND WILL ERECT THE NECESSARY BARRIERS, PROTECTION FENCES AND/OR CANOPIES ALONG PUBLIC WAYS PRIOR TO STARTING CONSTRUCTION.
45. CONTRACTOR WILL PROVIDE CERTIFICATION THAT ROOFING MATERIALS MEET CLASS A FIRE RETARDANT REQUIREMENTS.
46. FIRE SAFETY AND LIFE SAFETY DOCUMENTS ARE PROVIDED SEPARATELY, AND WILL BE COVERED UNDER A SEPARATE PERMIT.
47. THE CONSTRUCTION SHALL NOT RESTRICT A FIVE-FOOT CLEAR AND UNOBSTRUCTED ACCESS TO ANY WATER OR POWER DISTRIBUTION FACILITIES (POWER POLES, PULL-BOXES, TRANSFORMERS, VAULTS, PUMPS, VALVES, METERS, APPURTENANCES, ETC.) OR TO THE LOCATION OF THE HOOK-UP. THE CONSTRUCTION SHALL NOT BE WITHIN 10 FEET OF ANY POWER LINES-WETHER OR NOT THE LINES ARE LOCATED ON THE PROPERTY. FAILURE TO COMPLY MAY CAUSE CONSTRUCTION DELAYS AND/OR ADDITIONAL EXPENSES.
48. AN APPROVED SEISMIC GAS SHUTOFF VALVE WILL BE INSTALLED ON THE FUEL GAS LINE ON THE DOWN STREAM SIDE OF THE UTILITY METER AND BE RIGIDLY CONNECTED TO THE EXTERIOR OF THE BUILDING OR STRUCTURE CONTAINING THE FUEL GAS PIPING. (PER ORDINANCE 170,158) (INCLUDES COMMERCIAL ADDITIONS AND T.I. WORK OVER $10,000.) SEPARATE PLUMBING PERMIT IS REQUIRED.
49. A COPY OF THE EVALUATION REPORT AND/OR CONDITIONS OF LISTING SHALL BE MADE AVAILABLE AT THE JOB SITE.

3 SOUND TRANSMISSION CONTROL

1. ELECTRICAL OUTLET BOXES IN OPPOSITE FACES OF SEPARATION WALL WILL BE SEPARATED HORIZONTALLY BY 24". BACK AND SIDE OF BOXES WILL BE SEALED WITH 1/8" RESILIENT SEALANT AND BACKED BY A MINIMUM OF 2" THICK MINERAL FIBER INSULATION. (TV. TELEPHONE AND INTERCOM OUTLET MUST BE INSTALLED IN BOXES ACCORDINGLY).
2. AN APPROVED PERMANENT AN RESILIENT ACOUSTICAL SEALANT WILL BE PROVIDED ALONG THE JOINT BETWEEN THE FLOOR AND THE SEPARATION WALLS.
3. ALL PENETRATIONS INTO SOUND RATED PARTITIONS WILL BE SEALED WITH APPROVED PERMANENT RESILIENT SEALANT.
4. ALL RIGID CONDUIT, DUCTS, PLUMBING PIPES AND APPLIANCES VENTS LOCATED IN SOUND ASSEMBLIES WILL BE ISOLATED FROM THE BUILDING CONSTRUCTION BY MEANS OF RESILIENT MATERIAL.
5. METAL VENTILATING AND CONDITIONED AIR DUCTS LOCATED IN SOUND ASSEMBLIES WILL BE LINED. (EXCEPTION: DUCTS SERVING ONLY EXITWAYS, KITCHEN COOKING FACILITIES AND BATHROOMS NEED NOT BE LINED.)

4 WATER CONSERVATION

1. PROVIDE ULTRA-FLUSH WATER CLOSETS FOR ALL NEW CONSTRUCTION. EXISTING SHOWER HEADS AND TOILETS MUST BE ADAPTED FOR LOW WATER CONSUMPTION.

WATER CLOSETS AND TOILET COMPARTMENTS

1. THE WATER CLOSET SHALL BE POSITIONED WITH A WALL OR PARTITION TO REAR AND TO ONE SIDE. THE CENTERLINE OF THE WATER CLOSET SHALL BE 17 INCHES MINIMUM TO 18 INCHES MAXIMUM FROM SIDE WALL OR PARTITION, EXCEPT THAT THE WATER CLOSET SHALL BE 17 INCHES MINIMUM AND 19 INCHES MAXIMUM FROM THE SIDE WALL OR PARTITION IN THE AMBULATORY ACCESSIBLE TOILET COMPARTMENT SPECIFIED IN SECTION 11B-604.8.2 AMBULATORY ACCESSIBLE COMPARTMENTS. WATER CLOSETS SHALL BE ARRANGED FOR A LEFT-HAND OR RIGHT-HAND APPROACH.(11B-604.2)
2. DOOR SHALL NOT SWING INTO THE CLEAR FLOOR SPACE OR CLEARANCE REQUIRED FOR ANY FIXTURE. OTHER THAN THE DOOR TO THE ACCESSIBLE WATER CLOSET COMPARTMENT, A DOOR IN ANY POSITION, MAY ENCROACH INTO THE TURNING SPACE BY 12 INCHES MAXIMUM. 11B-603.2.3
3. CLEARANCE AROUND A WATER CLOSET SHALL BE 60 INCHES MINIMUM MEASURED PERPENDICULAR FROM THE SIDE WALL AND 56 INCHES MINIMUM MEASURED PERPENDICULAR FROM THE REAR WALL. A MINIMUM 60 INCHES WIDE AND 48 INCHES DEEP MANEUVERING SPACE SHALL BE PROVIDED IN FRONT OF THE WATER CLOSET. 11B-604.3.1
4. WHEELCHAIR ACCESSIBLE COMPARTMENTS SHALL BE 60 INCHES WIDE MINIMUM MEASURE PERPENDICULAR TO THE SIDE WALL, AND 56 INCHES DEEP MINIMUM FOR WALL HUNG WATER CLOSETS AND 59 INCHES DEEP MINIMUM FOR FLOOR MOUNTED WATER CLOSETS MEASURED PERPENDICULAR TO THE REAR WALL. WHEELCHAIR ACCESSIBLE COMPARTMENTS FOR CHILDREN'S USE SHALL BE 600 INCHES WIDE MINIMUM MEASURED PERPENDICULAR TO THE SIDE WALL, AND 59 INCHES DEEP MINIMUM FOR WALL HUNG AND FLOOR MOUNTED WATER CLOSETS MEASURED PERPENDICULAR TO THE REAR WALL . 11B-604.8.1.1

5 FIRE DEPARTMENT

MEANS OF EGRESS (C.C.R. TITLE 24, PART 2, CHAPTER 10: L.A.M.C. 57.33)

1. MEANS OF EGRESS MUST HAVE CONTINUOUS, UNOBSTRUCTED, AND UNDIMINISHED PATH TO PUBLIC WAY.
2. EXIT COURT SHALL COMPLY WITH TITLE 24, PART 2, SEC. 1006.3. WIDTH REDUCTION SHALL BE AFFECTED GRADUALLY BY AN ANGLE NOT MORE THAN 30 DEGREES.
3. EXIT COURT, LESS THAN 10 FEET IN WIDTH, SHALL HAVE A MINIMUM OF ONE-HOUR, FIRE RESISTIVE CONSTRUCTION FOR A DISTANCE OF 10 FEET ABOVE THE COURT, AND OPENINGS SHALL BE PROTECTED WITH 3/4 HOUR FIRE ASSEMBLIES.
4. EXTERIOR STAIRS SHALL NOT PROJECT INTO YARDS WHERE ALL OPENINGS ARE NOT PERMITED OR MUST BE PROTECTED.
5. AN EXIT WALKWAY WITH A MINIMUM WIDTH OF 48" SHALL BE MAINTAINED CONTINUOUSLY TO A PUBLIC WAY.
6. AISLES LEADING TO REQUIRED CORRIDORS AND EXITS SHALL HAVE A MINIMUM WIDTH OF 44".
7. EXIT PATH OR WALKWAYS TO PUBLIC WAY SHALL BE CLEARLY DELINEATED. EXIT PATHS MAY BE DELINEATED BY PAINTED LINES, RAILINGS, BARRIER POSTS, WALKS, OR OTHER APPROVED MEANS.
8. EXIT DOORS SHALL SWING IN THE DIRECTION OF EXIT TRAVEL WHEN SERVING 50 OR MORE PERSONS AND IN ANY HAZARDOUS AREA OR GROUP H OCCUPANCY.
9. DOUBLE-ACTING DOORS SHALL BE PROVIDED WITH A VIEW PANEL OF NOT LESS THAN 200 SQUARE INCHES.
10. DOUBLE-ACTING DOORS SHALL NOT BE USED WHEN OCCUPANT LOAD SERVED BY DOOR IS 100 OCCUPANTS OR MORE.
11. OPENINGS IN EXTERIOR WALLS BELOW AND WITHIN 10 FEET OF AN EXTERIOR STAIRWAY OR UNPROTECTED OPENINGS IN AN INTERIOR EXIT STAIRWAY SHALL BE PROTECTED FIRE ASSEMBLIES HAVING A 3/4-HOUR FIRE PROTECTION RATING. (SECTION 1003.3.3.10)
12. EVERY EXIT SHALL BE OPENABLE FROM THE INSIDE WITHOUT THE USE OF A KEY OR ANY SPECIAL KNOWLEDGE OR EFFORT. SPECIAL LOCKING DEVICES SHALL BE OF AN APPROVED TYPE (FLUSH BOLT AND SURFACE BOLTS ARE PROHIBITED), REQUIRING ONE SINGLE EFFORT TO OPERATE. ALL NEW DOORS SHALL HAVE APPROVED LEVER HANDLES. "APPLIES ALSO TO EXIT GATES."
13. PANIC HARDWARE SHALL BE PROVIDED ON EXIT DOORS HANDLING AN OCCUPANT CAPACITY OF 50 OR MORE PERSONS. FROM ANY GROUP A, E, OR I OCCUPANCY; AND FOR H 1, 2, 6, 7, 8 OCCUPANCY AND SOUND STAGES. ONLY PANIC HARDWARE APPROVED AND LISTED BY THE STATE FIRE MARSHALL SHALL BE INSTALLED.
14. FIRE ASSEMBLIES INSTALLED ACROSS EXIT CORRIDORS SHALL BE AUTOMATIC-CLOSING FIRE ASSEMBLIES ACTIVATED BY A SMOKE DETECTOR. ALL HOLD-OPEN DEVICES SHALL BE LISTED FOR THE PURPOSE. (TITLE 24, PART 2, SECTION 713.6)
15. MEANS OF EGRESS SHALL BE ILLUMINATED AT A MIN. INTENSITY OF 1 FOOT-CANDLE AT THE FLOOR LEVEL.
16. MEANS OF EGRESS ILLUMINATION SHALL BE PROVIDED FROM AN EMERGENCY POWER SYSTEM.
17. EGRESS DOORS SHALL BE READILY OPENABLE FROM THE EGRESS SIDE WITHOUT THE USE OF A KEY FOR SPECIAL KNOWLEDGE OR EFFORT. SEE 1008.1.8.3 FOR EXCEPTIONS.
18. ALL EGRESS DOOR OPERATION SHALL ALSO COMPLY WITH SECTION 1008.1.8-1008.1.8.6.
19. THE MEANS OF EGRESS, INCLUDING THE EXIT DISCHARGE, SHALL BE ILLUMINATED AT ALL TIMES THE BUILDING SPACE SERVED BY THE MEANS OF EGRESS IS OCCUPIED.
20. THE POWER SUPPLY FOR MEANS OF EGRESS ILLUMINATION SHALL NORMALLY BE PROVIDED BY THE PREMISES' ELECTRICAL SUPPLY. IN THE EVENT OF POWER SUPPLY FAILURE, AN EMERGENCY ELECTRICAL SYSTEM SHALL AUTOMATICALLY ILLUMINATE THE FOLLOWING AREAS: A-AISLES AND UNENCLOSED EGRESS STAIRWAYS IN ROOMS AND SPACES THAT REQUIRE TWO OR MORE MEANS OF EGRESS, B-CORRIDORS, EXIT ENCLOSURES AND EXIT PASSAGEWAYS IN BUILDINGS REQUIRED TO HAVE TWO OR MORE EXITS, C-EXTERIOR EGRESS COMPONENTS AT OTHER THAN THE LEVEL OF EXIT DISCHARGE UNTIL EXIT DISCHARGE IS ACCOMPLISHED FOR BUILDINGS REQUIRED TO HAVE TWO OR MORE EXITS, D-INTERIOR EXIT DISCHARGE ELEMENTS, AS PERMITTED IN SECTION 1024.1, IN BUILDINGS REQUIRED TO HAVE TWO OR MORE EXITS, E-EXTERIOR LANDINGS, AS REQUIRED BY SECTION 1008.1.5, FOR EXIT DISCHARGE DOORWAYS IN BUILDINGS REQUIRED TO HAVE TWO OR MORE EXITS.
21. THE EMERGENCY POWER SYSTEM SHALL PROVIDE POWER FOR A DURATION OF NOT LESS THAN 90 MINUTES AND SHALL CONSIST OF STORAGE BATTERIES, UNIT EQUIPMENT OR AN ON-SITE GENERATOR. THE INSTALLATION OF THE EMERGENCY POWER SYSTEM SHALL BE IN ACCORDANCE WITH SECTION 2702.
22. EMERGENCY LIGHTING FACILITIES SHALL BE ARRANGED TO PROVIDE INITIAL ILLUMINATION THAT IS AT LEAST AN AVERAGE OF 1 FOOT-CANDLE (11 LUX) AND A MINIMUM AT ANY POINT OF 0.1 FOOT-CANDLE (1 LUX) MEASURED ALONG THE PATH OF EGRESS AT FLOOR LEVEL. ILLUMINATION LEVELS SHALL BE PERMITTED TO DECLINE TO 0.6 FOOT-CANDLE (6 LUX) AVERAGE AND A MINIMUM AT ANY POINT OF 0.06 FOOT-CANDLE (0.6 LUX) AT THE END OF THE EMERGENCY LIGHTING TIME DURATION. A MAXIMUM-TO-MINIMUM ILLUMINATION UNIFORMITY RATIO OF 40 TO 1 SHALL NOT BE EXCEEDED.

SPECIAL HAZARDS

1. ROOF CONSTRUCTION SUCH AS TELEVISION ANTENNA, GUY WIRES, SOLAR PANELS, AND RAZOR RIBBON SHALL NOT PREVENT FIRE DEPARTMENT ACCESS OR EGRESS IN THE EVENT OF A FIRE. (L.A.M.C. 57.12)
2. PROVIDE COLLISION BARRIERS ADEQUATE TO PROTECT CONTROL METERS, REGULATORS, AND PIPING FOR HAZARDOUS MATERIALS THAT ARE EXPOSED TO VEHICULAR DAMAGE. (L.A.M.C. 57.20)
3. ROOF COVERING SHALL CONFORM WITH TABLE 15A. (L.A.M.C. 91.1501)
4. FIRE DAMPERS SHALL BE PROVIDED WHERE DUCTS PENETRATE FIRE-RATED WALLS OR CEILINGS. (TITLE 24, CHAPTER 32, U.B.C.)
5. PARKING SPACES SHALL NOT OBSTRUCT REQUIRED EXITS. (L.A.M.C. 57.33)
6. PROVIDE DRAFT STOPS IN CONCEALED SPACES AS PER C.C.R., TITLE 24, PART 2, SECTION 708.3
7. CONSPICUOUSLY MARK GAS SHUT-OFF VALVE. (C.C.R., TITLE 19)
8. COMPLY WITH INDOOR STORAGE OF COMBUSTIBLE MATERIALS. (L.A.M.C. 57.57)
9. POST OCCUPANT LOAD AS REQUIRED BY FIRE DEPARTMENT AT ALL ASSEMBLY AREAS.
10. SMOKE AND FIRE DAMPERS MUST BE INSTALLED IN THE FOLLOWING LOCATIONS: A-DUCT PENETRATIONS OF AREA OR OCCUPANCY SEPARATION WALLS W/RATINGS OF TWO HOURS OR LESS, B-DUCTS PASSING THRU HORIZONTAL EXIT WALLS, C-DUCTS PENETRATING SHAFTS, D-DUCTS PENETRATING FIRE RESISTIVE ELEMENTS OR FIRE-RATED CORRIDOR WALLS.
11. PROVIDE AN AREA FOR COMBUSTIBLE RUBBISH STORAGE 10 FEET FROM BUILDING AND OPENINGS. SHOW LOCATION ON PLANS. (L.A.M.C. 57.21)
12. RUBBISH ROOM SHALL BE OF ONE-HOUR FIRE-RESISTIVE CONSTRUCTION AND BE EQUIPPED WITH AN AUTOMATIC SPRINKLER SYSTEM. (L.A.M.C. 57.21)
13. OPENINGS INTO RUBBISH AND LINEN CHUTES AND THEIR TERMINAL ROOMS SHALL NOT BE LOCATED IN REQUIRED EXIT CORRIDORS OR STAIRWAYS. (TITLE 24, PART 2, SECTION 711.5)

FIRE BLOCKING

5 FIRE DEPARTMENT (CONTINUE)

FIRE BLOCKING

1. "FIRE BLOCKING" MUST BE PROVIDED IN ACCORDANCE WITH SECTION 717 AT THE FOLLOWING LOCATIONS: A-IN CONCEALED SPACES OF STUD WALLS AND PARTITIONS, INCLUDING FURRED SPACES, AT THE CEILING AND FLOOR LEVELS, B-IN CONCEALED SPACES OF STUD WALLS AND PARTITIONS, INCLUDING FURRED SPACES, AT 10-FOOT INTERVALS ALONG THE LENGTH OF THE WALL, C-AT ALL INTERCONNECTIONS BETWEEN CONCEALED VERTICAL AND HORIZONTAL SPACES SUCH AS OCCUR AT SOFFIT, DROP CEILINGS AND COVE CEILINGS, D-IN CONCEALED SPACES BETWEEN STAIR STRINGERS AT THE TOP AND BOTTOM OF THE RUN AND BETWEEN STUDS ALONG AND IN LINE WITH THE RUN OF STAIRS IF THE WALL UNDER THE STAIRS IS UNFINISHED, E-IN OPENINGS AROUND VENTS, PIPES, DUCTS, CHIMNEYS, FIREPLACES AND SIMILAR OPENINGS WHICH AFFORD A PASSAGE FOR FIRE AT CEILING AND FLOOR LEVELS, WITH NONCOMBUSTIBLE MATERIALS.

FIRE- RESISTANCE RATED CONSTRUCTION

1. SMOKE AND FIRE DAMPERS MUST BE INSTALLED IN THE FOLLOWING LOCATIONS PER SECTION 717.5
    a. DUCT PENETRATIONS OF FIRE WALLS IN ACCORDANCE TO SECTION 717.1
    b. DUCT PENETRATIONS OF FIRE BARRIERS, EXCEPT EXIT ENCLOSURES AND EXIT PASSAGEWAYS WHERE THEY ARE NOT ALLOWED TO PENETRATION. (717.5.2)
    c. DUCTS PENETRATING SHAFTS. (717.5.3)
    d. DUCTS PENETRATING FIRE PARTITIONS AND FIRE-RATED CORRIDOR WALLS. SEE EXCEPTION FOR STEEL DUCTS WITH NO OPENINGS INTO CORRIDOR. (717.5.4)
    e. DUCTS PENETRATING SMOKE BARRIERS. (717.5.5)
    f. DUCTS PENETRATING HORIZONTAL ASSEMBLIES. (717.5.6)
2. DRAFT STOP LOCATION ON PLANS
    a. IN BUILDINGS USED FOR OTHER THAN RESIDENTIAL OCCUPANCIES, DRAFT STOPS MUST BE INSTALLED IN WOOD FRAME FLOOR CONSTRUCTION CONTAINING CONCEALED SPACE. SUCH DRAFT STOPS MUST BE INSTALLED SO THAT THE AREA OF THE CONCEALED SPACE DOES NOT EXCEED (1000) SQUARE FEET (718.3.3).

FIRE- RESISTANCE RATED CONSTRUCTION

    b. IN BUILDINGS USED FOR OTHER THAN RESIDENTIAL OCCUPANCIES, DRAFT STOPS MUST BE INSTALLED IN THE ATTIC (MANSARDS) (OVERHANGS) (FALSE FRONTS SET OUT FROM WALLS) (SIMILAR CONCEALED SPACE) FORMED BY COMBUSTIBLE CONSTRUCTION. SUCH DRAFT STOPS MUST BE INSTALLED SO THAT THE ERA OF THE CONCEALED SPACE DOES NOT EXCEED (3000) SQUARE FEET (718.4.3).
    c. DRAFT-STOPPING MATERIALS MUST NOT BE LESS THAN 1/2-INCH GYPSUM BOARD, 3/8-INCH TYPE 2-M PARTICLE BOARD OR OTHER MATERIALS APPROVED BY THE BUILDING DEPARTMENT. DRAFT-STOPPING MUST BE ADEQUATELY SUPPORTED. (718.3.1)
3. DRAFT STOPS SHALL BE PROVIDED WITHIN A CONCEA;EDS FLOOR-CEILING ASSEMBLY FORMED A COMBUSTIBLE CONSTRUCTION, UNLESS THE BUILDING IS SPRINKLERED WITH NFPA13 SPRINKLER SYSTEM (3000 SF BETWEEN DRAFT STOPS) (718.3.3)
4. DRAFT STOP SHALL PROVIDED WITHIN A CONCEALED FLOOR-CEILING ASSEMBLY FORMED OF COMBUSTIBLE CONSTRUCTION, UNLESS THE BUILDING IS SPRINLERED WITH NFPA13 SPRINKLER SYSTEM (1000 ST BETWEEN DRAFT STOPS) (718.3.3)
5. FIRE BLOCKING MUST BE PROVIDED IN ACCORDANCE WITH SECTION 718.2 AT THE FOLLOWING LOCATIONS:
    a. IN CONCEALED SPACES OF STUD WALLS AND PARTITIONS, INCLUDING FURRED SPACES, AT THE CEILING AND FLOOR LEVELS.
    b. IN CONCEALED SPACES OF STUD WALLS AND PARTITIONS, INCLUDING FURRED SPACES, AT 10-FOOT INTERVALS ALONG THE LENGTH OF THE WALL.
    c. AT ALL INTERCONNECTIONS BETWEEN CONCEALED VERTICAL AND HORIZONTAL SPACES SUCH AS OCCUR AT SOFFITS, DROP CEILING AND FLOOR LEVELS.
    d. IN CONCEALED SPACES BETWEEN STAIR STRINGERS AT TOP AND BOTTOM OF THE RUN AND BETWEEN STUDS ALONG AND IN LINE WITH THE RUN OF STAIRS IF THE WALL UNDER THE STAIRS IS UNFINISHED.
    e. IN OPENINGS AROUND VENTS, PIPES, DUCTS, CHIMNEYS, FIREPLACES AND SIMILAR OPENING WHICH AFFORD A PASSAGE FOR FIRE AT CEILING AND FLOOR LEVELS, WITH NONCOMBUSTIBLE MATERIALS.

FIRE PROTECTION:

1. THIS BUILDING MUST BE EQUIPPED WITH AN AUTOMATIC FIRE EXTINGUISHING SYSTEM, COMPLYING WITH (NFPA-13); THE SPRINKLER SYSTEM SHALL BE APPROVED BY PLUMBING DIV. PRIOR TO INSTALLATION.(903.2)

PLANS

1. BUILDING ADDRESS SHALL BE PROVIDED AT OR NEAR THE ENTRANCE OF THE BUILDING IN ACCORDANCE WITH L.A.M.C. 57.09.11.
2. INDICATE WIDTH AND LOCATION OF AISLES AND CROSS-AISLES AND SEATING ARRANGEMENT ON PLANS. SEATING SHALL COMPLY WITH TITLE 19, C.C.R., L.A.M.C. 57.33)

CONSTRUCTION AND FIRE SEPARATIONS (C.C.R. TITLE 24, PART 2, CHAPTERS 3, 5, 6 &7)

1. BUILDINGS HOUSING GROUP A AND E OCCUPANCIES SHALL FRONT DIRECTLY ON OR DISCHARGE TO A PUBLIC STREET NOT LESS THAN 20 FEET IN WIDTH.

CORRIDORS AND HALLWAYS (C.C.R. TITLE 24, PART 2)

1. FIRE-RESISTANCE-RATED CORRIDORS SHALL BE CONTINUOUS FROM THE POINT OF ENTRY TO AN EXIT, AND SHALL NOT BE INTERRUPTED BY INTERVENING ROOMS. (1018.6)
2. WHERE MORE THAN ONE EXIT OR EXIT ACCESS DOORWAY IS REQUIRED, THE EXIT ACCESS SHALL BE ARRANGED SUCH THAT THERE ARE NO DEAD ENDS IN CORRIDORS MORE THAN 20 FEET (6096 MM) IN LENGTH. (1018.4)
3. CORRIDORS SHALL BE FIRE-RESISTANCE RATED IN ACCORDANCE WITH TABLE 1018.1. THE CORRIDOR WALLS REQUIRED TO BE FIRE-RESISTANCE RATED SHALL COMPLY WITH SECTION 709 FOR FIRE PARTITIONS. (1018.1)
4. DOORS OPENING INTO ONE-HOUR FIRE-RESISTIVE CORRIDOR SHALL BE PROTECTED WITH A SMOKE OR DRAFT-STOP FIRE ASSEMBLY HAVING A MINIMUM 20-MINUTE RATING. "SHOW ON DOOR SCHEDULE". DOOR AND FRAME SHALL BEAR AN APPROVED LABEL SHOWING THE RATING FOLLOWED BY THE LETTER "S". ( )
5. WINDOWS IN ONE-HOUR CORRIDOR SHALL BE LIMITED TO FIXED GLAZING OF 20 MINUTE FIRE RATING. ( )

INTERIOR FINISHES AND FLAME RETARDANT (C.C.R. TITLE 24, PART 2, CHAPTER 8)

1. INTERIOR WALL AND CEILING FINISHES SHALL COMPLY WITH TABLE 8B. INTERIOR WALL AND CEILING FINISHES SHALL NOT EXCEED AN END POINT FLAME SPREAD RATING OF 75.
2. FOLDING PARTITION WALLS SHALL BE NON-COMBUSTIBLE HAVE FLAME SPREAD AS SPECIFIED IN TABLE 8B. (601.5.3)
3. TEXTILE WALL COVERING SHALL COMPLY WITH SECTION 805.
4. ANY DECORATIONS SHALL BE NON-COMBUSTIBLE OR FLAME RETARDANT TREATED IN AN APPROVED MANNER (CURTAINS, DRAPES, SHADES, HANGINGS, ETC.). (L.A.M.C. 57.22)
5. INDICATE ON PLANS THAT INTERIOR FINISH MATERIALS APPLIED TO WALL AND CEILINGS SHALL BE TESTED AS SPECIFIED IN SECTION 803. SPECIFY THE CLASSIFICATIONS PER TABLE 803.9 AND SECTION 803.1.

SIGNS

1. PROVIDE EXIT SIGNS AND DIRECTIONAL EXIT SIGNS WITH MINIMUM 6" HIGH BY 3/4" STROKE BLOCK LETTERS ON A CONTRASTING BACKGROUND. SPACING BETWEEN SIGNS SHALL NOT EXCEED 100 FT. INDICATE LOCATION OF EXIT SIGNS ON ARCHITECTURAL PLANS. (L.A.M.C. 57.33; C.C.R., TITLE 24, PART 2, CHAPTER 10)
2. PROVIDE APPROVED LOW-LEVEL EXIT SIGNS IN ALL INTERIOR EXIT CORRIDORS. (TITLE 24, PART 2, CHAPTER 10)
3. WHENEVER THE BUILDING IS OCCUPIED, EXIT SIGNS SHALL BE LIGHTED SO THAT THEY ARE CLEARLY VISIBLE. (L.A.M.C. 57.33)
4. PROVIDE STAIRWAY NUMBERING SYSTEM FOR BUILDINGS THREE OR MORE STORIES. (L.A.M.C. 57.33)
5. EXIT SIGNS SHALL BE INTERNALLY OR EXTERNALLY ILLUMINATED.
6. EXIT SIGNS ILLUMINATED BY AN EXTERNAL SOURCE SHALL HAVE AN INTENSITY OF NOT LESS THAN 5 FOOT CANDLES (54 LUX).
7. INTERNALLY ILLUMINATED SIGNS SHALL BE LISTED AND LABELED AND SHALL BE INSTALLED IN ACCORDANCE WITH THE MANUFACTURER'S INSTRUCTIONS AND SECTION 2702.
8. EXIT SIGNS SHALL BE ILLUMINATED AT ALL TIMES.
9. EXIT SIGNS SHALL BE CONNECTED TO AN EMERGENCY POWER SYSTEM THAT WILL PROVIDE AN ILLUMINATION OF NOT LESS THAN 90 MIN. IN CASE OF PRIMARY POWER LOSS. (1011.2-1011.5.3)
10. "THIS DOOR TO REMAIN UNLOCKED WHEN BUILDING IS OCCUPIED".

FIRE PROTECTION EQUIPMENT (L.A.M.C. 57.140) & FIRE ALARMS

1. SEPARATE PLANS FOR ELECTRICAL, FIRE/LIFE/SAFETY AND FIRE SPRINKLER DESIGNS WILL BE SUBMITTED TO THE FIRE SAFETY DIVISION.
2. FIRE EXTINGUISHERS: A-PROVIDE A PORTABLE FIRE EXTINGUISHER WITH A RATING OF NOT LESS THAN 2-A OR 2-A10BC WITHIN 75 FEET TRAVEL DISTANCE TO ALL PORTIONS OF THE BUILDING ON EACH FLOOR; ALSO DURING CONSTRUCTION, B-PROVIDE PORTABLE FIRE EXTINGUISHER WITH A RATING NOT LESS THAN 10BC FOR KITCHEN, ELECTRICAL ROOM, MECHANICAL ROOM OR PARKING GARAGE, C-PORTABLE FIRE EXTINGUISHER WITH A RATING NOT LESS THAN 20-B, LOCATED NOT LESS THAN 10 FT., NOT MORE THAN 30 FT. FROM ANY FLAMMABLE LIQUID STORAGE AREA OF A HAZARDOUS MATERIAL ROOM, OR ADJACENT TO SPRAY BOOTH, D-PROVIDE FIRE EXTINGUISHER AS REQUIRED BY FIRE DEPARTMENT INSPECTOR.
3. PROVIDE AUTOMATIC FIRE EXTINGUISHING SYSTEM: A-THROUGHOUT BUILDING, B-BASEMENT, C-TRASH/LINEN ROOM AND CHUTE, D-OTHER (C.C.R., TITLE 24, PART 2, CHAPTER 9) SPRINKLER SYSTEM SHALL BE APPROVED BY BUILDING AND SAFETY MECHANICAL PLAN CHECK PRIOR TO INSTALLATION. (C.C.R. TITLE 24, PART 2, CHAPTER 9)
4. EXTEND OR MODIFY EXISTING AUTOMATIC FIRE EXTINGUISHING SYSTEM, AS NEEDED, TO BE APPROVED BY BUILDING AND SAFETY MECHANICAL PLAN CHECK PRIOR TO INSTALLATION. (L.A.M.C. 57.138)
5. FIRE DEPARTMENT CONNECTIONS SHALL BE LOCATED ON ADDRESS SIDE OF BUILDING. SHOW LOCATIONS ON THE PLANS (L.A.M.C. 57.138)
6. PROVIDE AN APPROVED FIRE ALARM SYSTEM.
7. EXTEND OR MODIFY FIRE/LIFE SAFETY SYSTEM.
8. THE CENTER OF THE FIRE ALARM INITIATING DEVICE (BOXES) SHALL BE LOCATED 48" ABOVE THE LEVEL OF THE FLOOR, WORKING PLATFORM, GROUND SURFACE, OR SIDEWALK. SEC 760-9.
9. THE INSTALLATION OF FIRE ALARM EQUIPMENT AND SYSTEMS IN ANY OCCUPANCY WITHIN THE SCOPE OF THESE REGULATIONS SHALL BE IN ACCORDANCE WITH THE PROVISIONS OF THE CALIFORNIA ELECTRICAL CODE. SEC 7201.
10. PROVIDE SMOKE DETECTOR IN THE COMMON STAIRWELLS SERVING TWO OR MORE TENANTS. (HEALTH AND SAFETY CODE 13113.7)
11. PROVIDE A SINGLE STATION SMOKE DETECTOR IN EACH LEVEL. INDICATE LOCATION ON FLOOR PLANS. (TITLE 24, PART 2, SECTION 3 10.9.1)

6 OFF STREET DISABLED ACCESS PARKING SIGN

SCALE: NONE

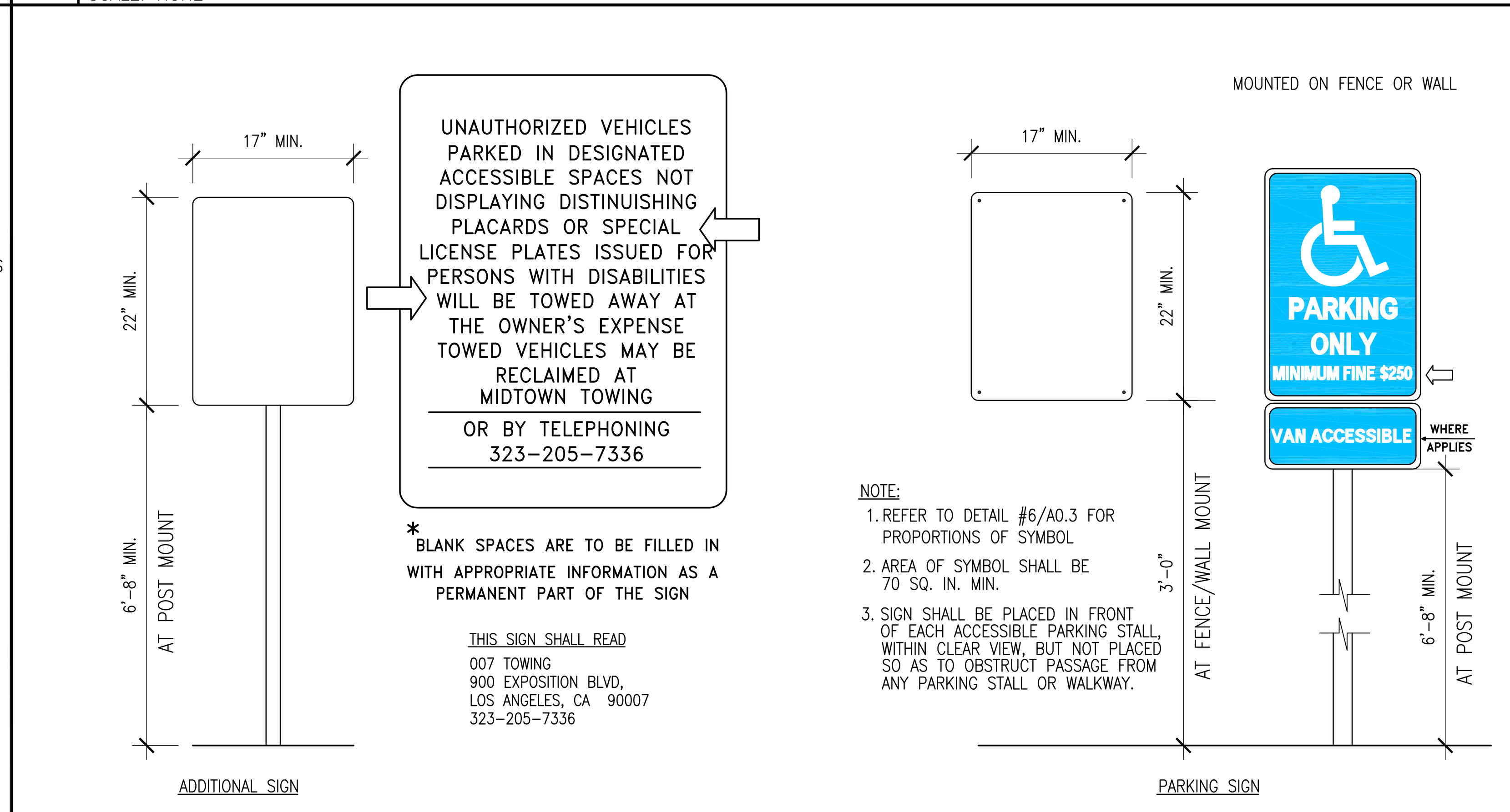

NOTE:
1. REFER TO DETAIL #6/A0.3 FOR PROPORTIONS OF SYMBOL
2. AREA OF SYMBOL SHALL BE 70 SQ. IN. MIN.
3. SIGN SHALL BE PLACED IN FRONT OF EACH ACCESSIBLE PARKING STALL, WITHIN CLEAR VIEW, BUT NOT PLACED SO AS TO OBSTRUCT PASSAGE FROM ANY PARKING STALL OR WALKWAY.

7 THRESHOLD/LEVEL CHANGES

SCALE: NONE

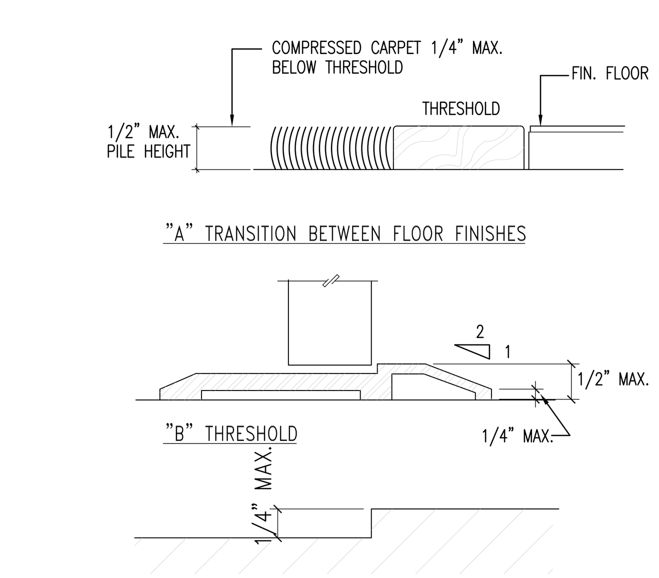

NOTES:
1. 1/2" MAXIMUM TOTAL HEIGHT WITH 1/4" MAXIMUM VERTICAL CHANGE AT EDGE.
2. 1 : 2 SLOPED BEVEL REQUIRED IF LEVEL CHANGE IS OVER 1/4" VERTICAL LEVEL CHANGE.
3. 1/4" MAXIMUM VERTICAL LEVEL CHANGE.

8 TRUNCATED DOMES

SCALE: NONE

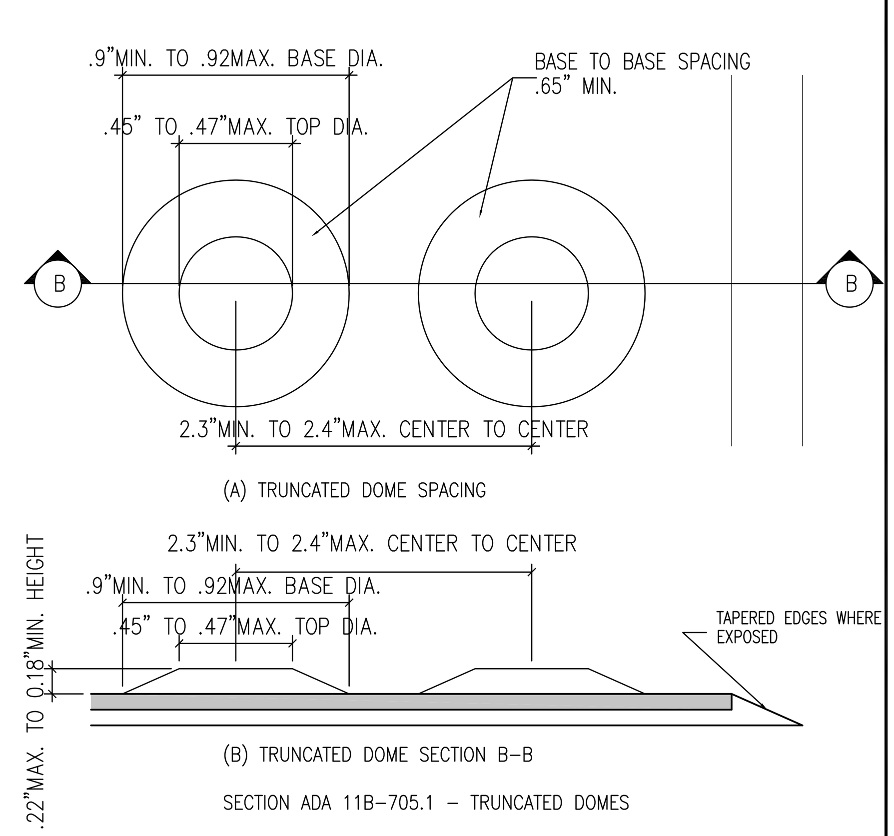

9 GENERAL SIGN DETAIL (THE STYLE AND COLOR TO BE DETERMINE)

SCALE: NONE

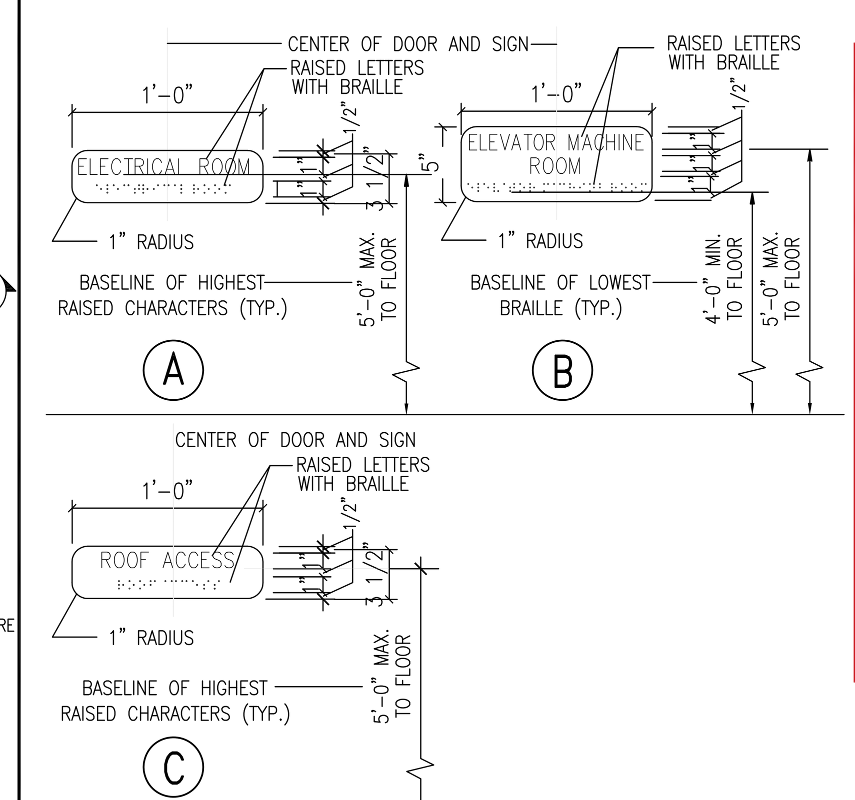

NOTES:
1-SIGNS SHALL COMPLY WITH THE REQUIREMENTS OF ALL SECTIONS OF CA T24 11B-703
2-CONTRACTOR TO PROVIDE SIGNAGE FOR EACH ROOM IN THE BUILDING
3-CLASSROOM SIGNS TO HAVE CLEAR LENS DISPLAY OFFICE SIGNS TO HAVE TWO SECTIONS WITH NUMBER AND ROOM NAME A DESIGN WILL BE PROVIDED DURING THE CONSTRUCTION PER CLIENT'S PREFERENCES, COLOR TBD
4-CONTRACTOR TO PROVIDE EVACUATION SIGNS FOR EVERY ROOM AND CORRIDOR PER FIRE DEPARTMENT REQUIREMENT- ARCHITECT WILL PROVIDE EVACUATION PLANS DURING CONSTRUCTION.
5-CONTRACTOR TO PROVIDE ROOM OCCUPANCY SIGNS FOR CLASSROOMS, OFFICES, ADMIN AND MULTI-PROPOSE ROOMS
6-CONTRACTOR TO PROVIDE EXIT AND STAIR SIGNAGE AT CORRIDORS AND STAIR CASES
7-CONTRACTOR TO PROVIDE EXTERIOR SIGNAGE. EXTERIOR SIGNAGE REQUIRES SEPARATE PERMIT OBTAIN BY CONTRACTOR
8-CONTRACTOR TO PROVIDE BUILDING ADDRESS SIGNAGE PER FIRE DEPARTMENT REQUIREMENT
9-CONTRACTOR TO PROVIDE SIGNAGE FOR EVERY RESTROOM IN THE BUILDING PER ADA REQUIREMENTS. REFER TO RESTROOM SHEETS FOR DETAILS

10 DOOR CONSTRUCTION

SCALE: NONE

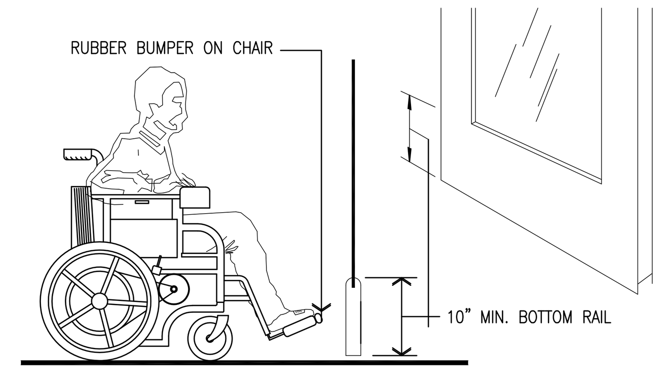

FRANCO ARCHITECTS INC.
12345 Ventura Blvd. H
Studio City, CA 91604
Architecture and Planning
Tel 818 754-2030
Fax 818 754-2032

MAGNOLIA SCIENCE ACADEMY
18220 SHERMAN WAY, RESEDA, CA91335

REV	DESCRIPTION	DATE
	PLAN CHECK #1	6/14/2017

LICENSED ARCHITECT
JOHANN D. WANG
C27010
4/30/2019
RENEWAL DATE
STATE OF CALIFORNIA

PROJECT: MAGNOLIA SCIENCE ACADEMY
PROJECT ADDRESS: 18220 SHERMAN WAY, RESEDA, CA91335
DRAWING TITLE: GENERAL, FIRE DEPT. & DISABLED ACCESS NOTES
DRAWN BY:
ISSUE DATE: 6/14/2017
JOB NUMBER:
DRAWING SCALE: AS NOTED
APPROVED BY:
DRAWING NUMBER: A0.2

1 ADA FORM– DETAIL FOR PARKING

CITY OF LOS ANGELES — LADBS DEPARTMENT OF BUILDING AND SAFETY

INFORMATION BULLETIN / PUBLIC - BUILDING CODE
REFERENCE NO.: LABC Sec.11B-208, 11B-502 — Effective: 01/01/2014
DOCUMENT NO.: **P/BC 2014-084** — Revised: 04/01/2016
Previously Issued As: P/BC 2011-084

ACCESSIBILITY DETAILS FOR PARKING

WHERE ACCESSIBLE PARKING IS REQUIRED

Where parking spaces are provided, parking spaces shall be provided in accordance with Section 11B-208.

Exception: Parking spaces used exclusively for buses, trucks, other delivery vehicles, or vehicular impound shall not be required to comply with Section 11B-208 provided that lots accessed by the public are provided with a passenger loading zone complying with Section 11B-503.

Minimum number. Parking spaces complying with Section 11B-503 shall be provided in accordance with Table 11B-208.2 except as required by Sections 11B-208.2.1, 11B-208.2.2, and 11B-208.2.3. Where more than one parking facility is provided on a site, the number of accessible spaces provided on the site shall be calculated according to the number of spaces required for each parking facility.

Hospital outpatient facilities. Ten percent of patient and visitor parking spaces provided to serve hospital outpatient facilities, and free-standing buildings providing outpatient clinical services of a hospital, shall comply with Section 11B-502.

Rehabilitation facilities and outpatient physical therapy facilities. Twenty percent of patient and visitor parking spaces provided to serve rehabilitation facilities specializing in treating conditions that affect mobility and outpatient physical therapy facilities shall comply with Section 11B-502.

Residential facilities. Parking spaces provided to serve residential facilities shall comply with Section 11B-208.2.3.

Parking for guests, employees, and other non-residents. Where parking spaces are provided for persons other than residents, parking shall be provided in accordance with Table 11B-208.2.

Requests for accessible parking spaces. When assigned parking is provided, designated accessible parking for the adaptable residential dwelling units shall be provided on requests of residents with disabilities on the same terms and with the full range of choices (e.g., off-street parking, carport or garage) that are available to other residents.

Van parking spaces. For every six or fraction of six parking spaces required by Section 11B-208.2 to comply with Section 11B-502, at least one shall be a van parking space complying with Section 11B-502.

Location. Parking facilities shall comply with Section 11B-208.3.

General. Parking spaces complying with Section 11B-502 that serve a particular building or facility shall be located on the shortest accessible route from parking to an entrance complying with Section 11B-206.4. Where parking serves more than one accessible entrance, parking spaces complying with Section 11B-502 shall be dispersed and located on the shortest accessible route to the accessible entrances. In parking facilities that do not serve a particular building or facility, parking spaces complying with Section 11B-502 shall be located on the shortest accessible route to an accessible pedestrian entrance of the parking facility.

Exceptions:
1. All van parking spaces shall be permitted to be grouped on one level within a multi-story parking facility.
2. Parking spaces shall be permitted to be located in different parking facilities if substantially equivalent or greater accessibility is provided in terms of distance from an accessible entrance or entrances, parking fee, and user convenience.

TOTAL NUMBER OF PARKING SPACES PROVIDED IN PARKING FACILITY	MINIMUM NUMBER OF REQUIRED ACCESSIBLE PARKING SPACES
1 to 25	1
26 to 50	2
51 to 75	3
76 to 100	4
101 to 150	5
151 to 200	6
201 to 300	7
301 to 400	8
401 to 500	9
501 to 1000	2 percent of total
1001 and over	20, plus 1 for each 100, or fraction thereof, over 1000

TABLE 11B-208.2 PARKING SPACES

CITY OF LOS ANGELES — LADBS DEPARTMENT OF BUILDING AND SAFETY — THESE DIAGRAMS ILLUSTRATE THE SPECIFIC REQUIREMENTS OF THESE REGULATIONS AND ARE INTENDED ONLY AS AN AID FOR BUILDING DESIGN AND CONSTRUCTION — *P/BC 2014-084*

PASSENGER DROP-OFF AND LOADING ZONES

General. Passenger drop-off and loading zones shall comply with Section 11B-503.

Vehicle pull-up space. Passenger drop-off and loading zones shall provide a vehicular pull-up space 96 inches wide minimum and 20 feet long minimum.

Access aisle. Passenger drop-off and loading zones shall provide access aisles complying with Section 11B-503 adjacent and parallel to the vehicle pull-up space. Access aisles shall adjoin an accessible route and shall not overlap the vehicular way.

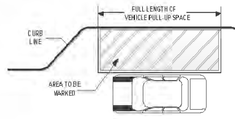

FIGURE 11B-503.3
PASSENGER DROP-OFF AND LOADING ZONE ACCESS AISLE

Width. Access aisles serving vehicle pull-up spaces shall be 60 inches wide minimum.

Length. Access aisles shall extend the full length of the vehicle pull-up spaces they serve.

Marking. Access aisles shall be marked with a painted borderline around their perimeter. The area within the borderlines shall be marked with hatched lines a maximum of 36 inches on center in a color contrasting with that of the aisle surface.

Floor and ground surfaces. Vehicle pull-up spaces and access aisles serving them shall comply with Section 11B-302. Access aisles shall be at the same level as the vehicle pull-up space they serve. Changes in level are not permitted.
Exception: Slopes not steeper than 1:48 shall be permitted.

Vertical clearance. Vehicle pull-up spaces, access aisles serving them, and a vehicular route from an entrance to the passenger loading zone and from the passenger loading zone to a vehicular exit shall provide a vertical clearance of 114 inches minimum.

Identification. Each passenger loading zone designated for persons with disabilities shall be identified with a reflectorized sign complying with Section 11B-703.5. It shall be permanently posted immediately adjacent to and visible from the passenger loading zone stating "Passenger Loading Zone Only" and including the International Symbol of Accessibility complying with Section 11B-703.7.2.1 in white on a dark blue background.

Medical care and long-term care facilities. At least one passenger loading zone complying with Section 11B-503 shall be provided at an accessible entrance to licensed medical care and licensed long-term care facilities where the period of stay may exceed twenty-four hours.

Valet parking. Parking facilities that provide valet parking services shall provide at least one passenger loading zone complying with Section 11B-503. The parking requirements of Section 11B-208.1 apply to facilities with valet parking.

Mechanical access parking garages. Mechanical access parking garages shall provide at least one passenger loading zone complying with Section 11B-503 at vehicle drop-off and vehicle pick-up areas.

PARKING SPACES

General. Car and van parking spaces shall comply with Section 11B-502. Where parking spaces are marked with lines, width measurements of parking spaces and access aisles shall be made from the centerline of the markings.
Exception: Where parking spaces or access aisles are not adjacent to another parking space or access aisle, measurements shall be permitted to include the full width of the line defining the parking space or access aisle.

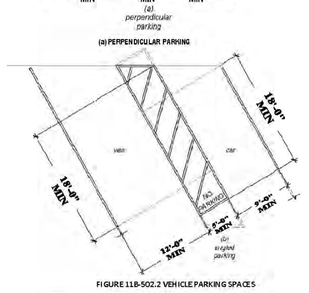

FIGURE 11B-502.2 VEHICLE PARKING SPACES

CITY OF LOS ANGELES — LADBS DEPARTMENT OF BUILDING AND SAFETY — THESE DIAGRAMS ILLUSTRATE THE SPECIFIC REQUIREMENTS OF THESE REGULATIONS AND ARE INTENDED ONLY AS AN AID FOR BUILDING DESIGN AND CONSTRUCTION — *P/BC 2014-084*

Vehicle spaces. Car and van parking spaces shall be 216 inches (18 feet) long minimum. Car parking spaces shall be 108 inches (9 feet) wide minimum and van parking spaces shall be 144 inches (12 feet) wide minimum, shall be marked to define the width, and shall have an adjacent access aisle complying with Section 11B-502.3.
Exception: Van parking spaces shall be permitted to be 108 inches (9 feet) wide minimum where the access aisle is 96 inches (8 feet) wide minimum.

Access aisle. Access aisles serving parking spaces shall comply with Section 11B-502.3. Access aisles shall adjoin an accessible route. Two parking spaces shall be permitted to share a common access aisle.

Width. Access aisles serving car and van parking spaces shall be 60 inches (5 feet) wide minimum.

Length. Access aisles shall extend the full required length of the parking spaces they serve.

Marking. Access aisles shall be marked with a blue painted borderline around their perimeter. The area within the blue borderlines shall be marked with hatched lines a maximum of 36 inches (3 feet) on center in a color contrasting with that of the aisle surface, preferably blue or white. The words "NO PARKING" shall be painted on the surface within each access aisle in white letters a minimum of 12 inches (1 foot) in height and located to be visible from the adjacent vehicular way. Access aisle markings may extend beyond the minimum required length.

Location. Access aisles shall not overlap the vehicular way. Access aisles shall be permitted to be placed on either side of the parking space except for van parking spaces which shall have access aisles located on the passenger side of the parking spaces.

Floor or ground surfaces. Parking spaces and access aisles serving them shall comply with Section 11B-302. Access aisles shall be at the same level as the parking spaces they serve. Changes in level are not permitted.
Exception: Slopes not steeper than 1:48 shall be permitted.

Vertical clearance. Parking spaces, access aisles and vehicular routes serving them shall provide a vertical clearance of 98 inches (2489 mm) minimum.

Identification. Parking space identification signs shall include the International Symbol of Accessibility complying with Section 11B-703.7.2.1. Signs identifying van parking spaces shall contain additional language or an additional sign with the designation "van accessible." Signs shall be 60 inches (5 feet) minimum above the finish floor or ground surface measured to the bottom of the sign.

Exception: Signs located within an accessible route shall be a minimum of 80 inches (6 feet, 8 inches) above the finish floor or ground surface measured to the bottom of the sign.

Finish and size. Parking identification signs shall be reflectorized with a minimum area of 70 square inches.

Minimum fine. Additional language or an additional sign below the International Symbol of Accessibility shall state "Minimum Fine $250."

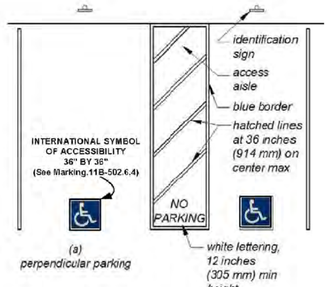

FIGURE 11B-502.3
PERPENDICULAR PARKING IDENTIFICATION

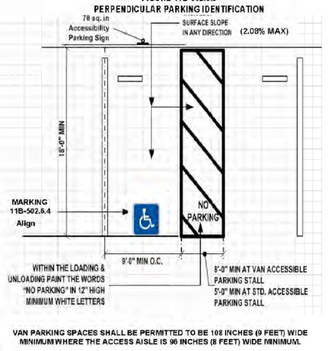

VAN PARKING SPACES SHALL BE PERMITTED TO BE 108 INCHES (9 FEET) WIDE MINIMUM WHERE THE ACCESS AISLE IS 96 INCHES (8 FEET) WIDE MINIMUM.

CITY OF LOS ANGELES — LADBS DEPARTMENT OF BUILDING AND SAFETY — THESE DIAGRAMS ILLUSTRATE THE SPECIFIC REQUIREMENTS OF THESE REGULATIONS AND ARE INTENDED ONLY AS AN AID FOR BUILDING DESIGN AND CONSTRUCTION — *P/BC 2014-084*

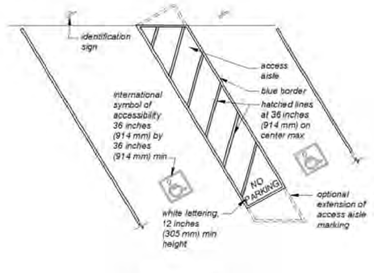

FIGURE 11B-502.3.3
ANGLED PARKING IDENTIFICATION

Location. A parking space identification sign shall be visible from each parking space. Signs shall be permanently posted either immediately adjacent to the parking space or within the projected parking space width at the head end of the parking space. Signs may also be permanently posted in a wall at the interior end of the parking space.

Marking. Each accessible car and van space shall have surface identification complying with either Sections 11B-502.6.4.1 or 11B-502.6.4.2.

The parking space shall be marked with an International Symbol of Accessibility complying with Section 11B-703.7.2.1 in white on a blue background a minimum 36 inches wide by 36 inches high. The centerline of the International Symbol of Accessibility shall be a minimum of 6 inches from the centerline of the parking space, its sides parallel to the length of the parking space and its lower corner at, or lower side aligned with, the end of the parking space length.

The parking space shall be outlined or painted blue and shall be marked with an International Symbol of Accessibility complying with Section 11B-703.7.2.1 a minimum 36 inches wide by 36 inches high in white or a suitable contrasting color. The centerline of the International Symbol of Accessibility shall be a maximum of 6 inches from the centerline of the parking space, its sides parallel to the length of the parking space and its lower corner at, or lower side aligned with, the end of the parking space.

Relationship to accessible routes. Parking spaces and access aisles shall be designed so that cars and vans, when parked, cannot obstruct the required clear width of adjacent accessible routes.

11B-602.7.1 Arrangement. Parking spaces and access aisles shall be designed so that persons using them are not required to travel behind parking spaces other than to pass behind the parking space in which they parked.

11B-602.7.2 Wheel stops. A curb or wheel stop shall be provided if required to prevent encroachment of vehicles over the required clear width of adjacent accessible routes.

11B-602.8 Additional signage. An additional sign shall be posted either:
1) In a conspicuous place at each entrance to an off-street parking facility or;
2) Immediately adjacent to on-site accessible parking and visible from each parking space.

11B-602.8.1 Size. The additional sign shall not be less than 17 inches wide by 22 inches high.

11B-602.8.2 Lettering. The additional sign shall clearly state in letters with a minimum height of 1 inch the following:
"Unauthorized vehicles parked in designated accessible spaces not displaying distinguishing placards or special license plates issued for persons with disabilities will be towed away at the owner's expense. Towed vehicles may be retrieved at: _____ or by telephoning _____."
Blank spaces shall be filled in with appropriate information as a permanent part of the sign. (NOTE: **Towing Co.'s Name** and **Telephone Number** must be noted on the detail sheets on the plans.)

CITY OF LOS ANGELES — LADBS DEPARTMENT OF BUILDING AND SAFETY — THESE DIAGRAMS ILLUSTRATE THE SPECIFIC REQUIREMENTS OF THESE REGULATIONS AND ARE INTENDED ONLY AS AN AID FOR BUILDING DESIGN AND CONSTRUCTION — *P/BC 2014-084*

ACCESSIBLE PARKING SIGN INSTALLED AT EACH SPACE

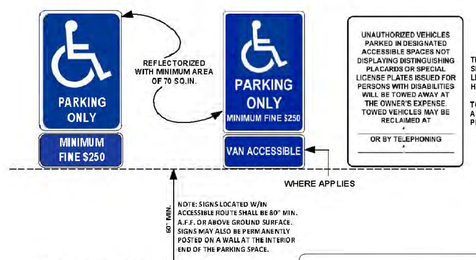

2 ADA FORM– DETAIL FOR RAMPS, STAIRS & ELEVATORS

CITY OF LOS ANGELES — LADBS DEPARTMENT OF BUILDING AND SAFETY

INFORMATION BULLETIN / PUBLIC - BUILDING CODE
REFERENCE NO.: LABC Sec.11B-403,404,405, 408,504,505,802 — Effective: 01/01/2014
DOCUMENT NO.: **P/BC 2014-085** — Revised: 07/01/2015
Previously Issued As: P/BC 2011-085

ACCESSIBILITY DETAILS FOR RAMPS, STAIRS & ELEVATORS

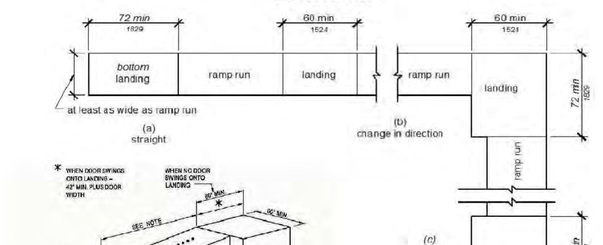

FIGURE 11B-405.7
RAMP LANDINGS

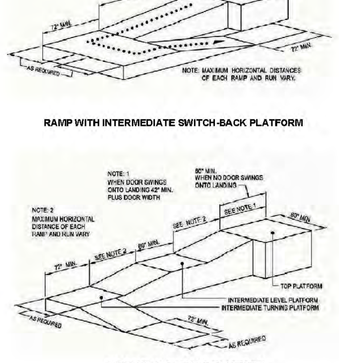

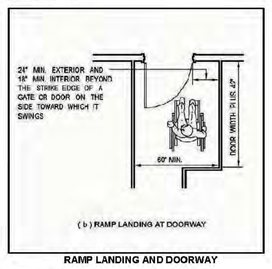

THESE DIAGRAMS ILLUSTRATE THE SPECIFIC REQUIREMENTS OF THESE REGULATIONS AND ARE INTENDED ONLY AS AN AID FOR BUILDING DESIGN AND CONSTRUCTION.

CITY OF LOS ANGELES — LADBS DEPARTMENT OF BUILDING AND SAFETY — THESE DIAGRAMS ILLUSTRATE THE SPECIFIC REQUIREMENTS OF THESE REGULATIONS AND ARE INTENDED ONLY AS AN AID FOR BUILDING DESIGN AND CONSTRUCTION. — *P/BC 2014-085*

RAMPS

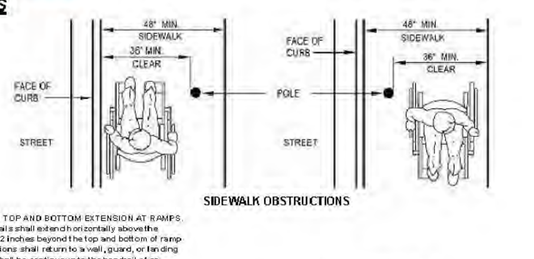

SIDEWALK OBSTRUCTIONS

11B-505.10.1 TOP AND BOTTOM EXTENSION AT RAMPS. Ramp handrails shall extend horizontally above the landing for 12 inches beyond the top and bottom of ramp runs. Extensions shall return to a wall, guard, or landing surface, or shall be continuous to the handrail of an adjacent ramp run.

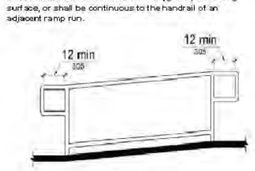

FIGURE 11B-505.10.1
TOP AND BOTTOM HANDRAIL EXTENSION AT RAMPS

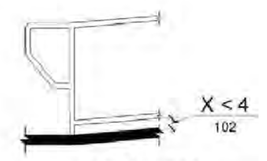

FIGURE 11B-405.9.2
CURB OR BARRIER EDGE PROTECTION

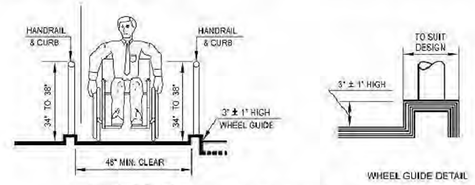

RAMPS AND HANDRAILS

CITY OF LOS ANGELES — LADBS DEPARTMENT OF BUILDING AND SAFETY — THESE DIAGRAMS ILLUSTRATE THE SPECIFIC REQUIREMENTS OF THESE REGULATIONS AND ARE INTENDED ONLY AS AN AID FOR BUILDING DESIGN AND CONSTRUCTION. — *P/BC 2014-085*

DOORWAYS AT RAMP LANDINGS

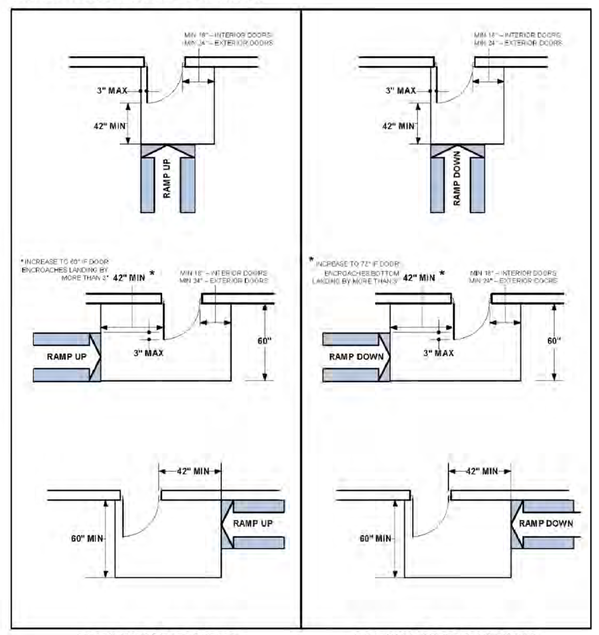

DOORWAYS AT TOP LANDING SPACE OF A RAMP — DOORWAYS AT BOTTOM LANDING SPACE OF A RAMP

CITY OF LOS ANGELES — LADBS DEPARTMENT OF BUILDING AND SAFETY — THESE DIAGRAMS ILLUSTRATE THE SPECIFIC REQUIREMENTS OF THESE REGULATIONS AND ARE INTENDED ONLY AS AN AID FOR BUILDING DESIGN AND CONSTRUCTION. — *P/BC 2014-085*

STAIRWAYS

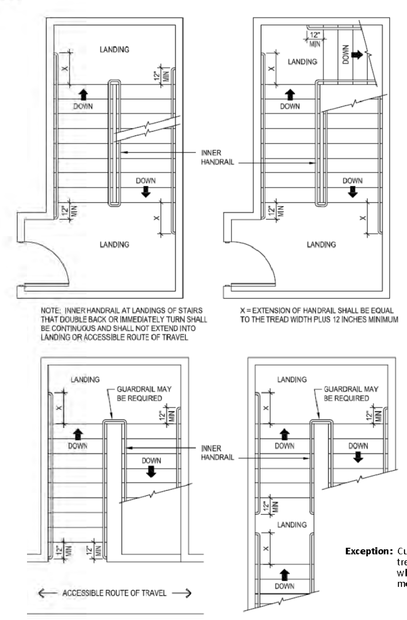

Exception: Curved stairways with winder treads are permitted at stairs which are not part of a required means of egress.

11B-504 STAIRWAYS

CITY OF LOS ANGELES — LADBS DEPARTMENT OF BUILDING AND SAFETY — THESE DIAGRAMS ILLUSTRATE THE SPECIFIC REQUIREMENTS OF THESE REGULATIONS AND ARE INTENDED ONLY AS AN AID FOR BUILDING DESIGN AND CONSTRUCTION. — *P/BC 2014-085*

STAIRS

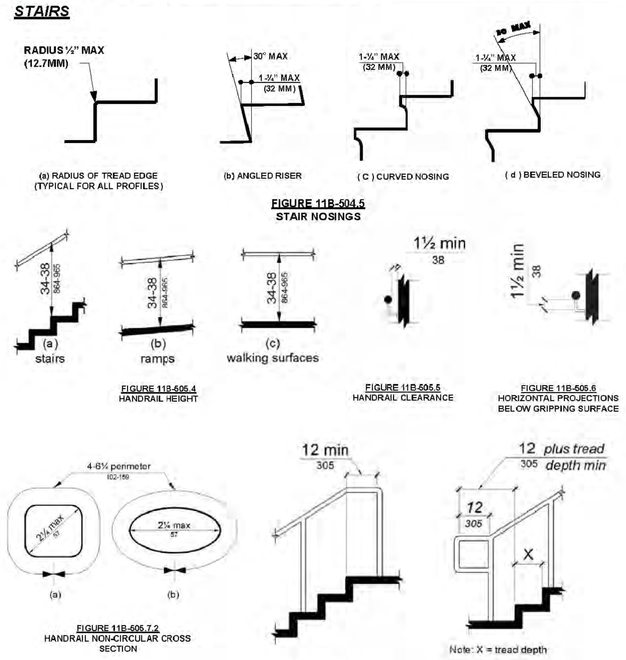

FIGURE 11B-505.4
HANDRAIL HEIGHT

FIGURE 11B-505.5
HANDRAIL CLEARANCE

FIGURE 11B-505.6
HORIZONTAL PROJECTIONS BELOW GRIPPING SURFACE

FIGURE 11B-505.7.2
HANDRAIL NON-CIRCULAR CROSS SECTION

FIGURE 11B-505.10.2
TOP HANDRAIL EXTENSION AT STAIRS

FIGURE 11B-505.10.3
BOTTOM HANDRAIL EXTENSION AT STAIRS

CITY OF LOS ANGELES — LADBS DEPARTMENT OF BUILDING AND SAFETY — THESE DIAGRAMS ILLUSTRATE THE SPECIFIC REQUIREMENTS OF THESE REGULATIONS AND ARE INTENDED ONLY AS AN AID FOR BUILDING DESIGN AND CONSTRUCTION — *P/BC 2014-085*

ELEVATORS

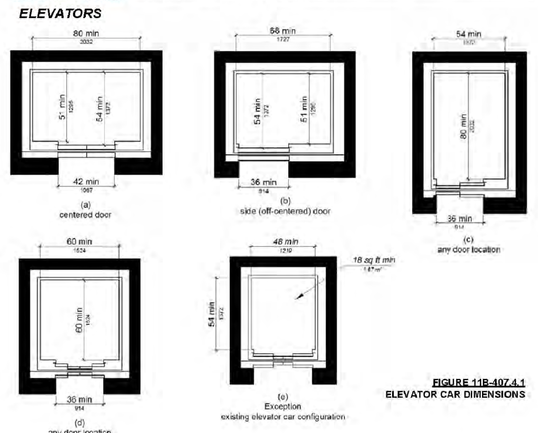

FIGURE 11B-407.4.1
ELEVATOR CAR DIMENSIONS

TABLE 11B-407.4.1
ELEVATOR CAR DIMENSIONS

MINIMUM DIMENSIONS					
DOOR LOCATION	DOOR CLEAR WIDTH	IN SIDE CAR, SIDE TO SIDE	INSIDE CAR, BACK WALL TO FRONT RETURN	INSIDE CAR, BACK WALL TO INSIDE FACE OF DOOR	
Centered	42 inches	80 inches	51 inches	54 inches	
Side (off-centered)	36 inches	68 inches	51 inches	54 inches	
Any	36 inches	54 inches	80 inches	80 inches	
Any	36 inches	60 inches	60 inches	60 inches	

1. A tolerance of minus 5.0 inch (15.0 mm) is permitted.
2. Other car configurations that provide a turning space complying with Section 11B-304 with the door closed shall be permitted.

CITY OF LOS ANGELES — LADBS DEPARTMENT OF BUILDING AND SAFETY — THESE DIAGRAMS ILLUSTRATE THE SPECIFIC REQUIREMENTS OF THESE REGULATIONS AND ARE INTENDED ONLY AS AN AID FOR BUILDING DESIGN AND CONSTRUCTION. — *P/BC 2014-085*

ELEVATORS

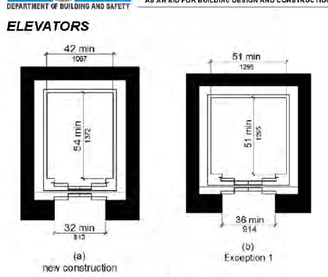

FIGURE 11B-408.4.1
LIMITED-USE/LIMITED-APPLICATION (LULA) ELEVATOR CAR DIMENSIONS

Door and signal timing. The minimum acceptable time from notification that a car is answering a call or notification of the car assigned at the means for the entry of destination information until the doors of that car start to close shall be calculated from the following equation:

T = D/(1.5 ft/s) or **T = D/(455 mm/s) = 5** seconds minimum where *T* equals the total time in seconds and *D* equals the distance (in feet or millimeters) from the point in the lobby or corridor 60 inches (1524 mm) directly in front of the farthest call button controlling that car to the centerline of its hoistway door. (11B-407.3.4)

Exceptions:
1. For cars with in-car lanterns, T shall be permitted to begin when the signal is visible from the point 60 inches (1524 mm) directly in front of the farthest hall call button and the audible signal is sounded.
2. Destination-oriented elevators shall not be required to comply with *Section 11B-407.3.4*.

Door delay. Elevator doors shall remain fully open in response to a car call for 5 seconds minimum. (11B-407.3.5)

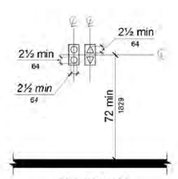

FIGURE 11B-407.2.3.2
VISIBLE HALL SIGNALS

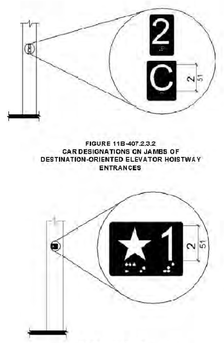

FIGURE 11B-407.2.3.2
CARDESIGNATIONS ON JAMBS OF DESTINATION-ORIENTED ELEVATOR HOISTWAY ENTRANCES

FIGURE 11B-407.2.3.1
FLOOR DESIGNATIONS ON JAMBS OF ELEVATOR HOISTWAY ENTRANCE

FRANCO ARCHITECTS INC.
12345 Ventura Blvd. H
Studio City, CA 91604
Tel 818 754-2030
Fax 818 754-2032
Architecture and Planning

MAGNOLIA SCIENCE ACADEMY
18220 SHERMAN WAY, RESEDA, CA91335

REV	DESCRIPTION	DATE
	PLAN CHECK #1	6/14/2017

LICENSED ARCHITECT — JOHANN D. WANG — C27010 — 4/30/2019 RENEWAL DATE — STATE OF CALIFORNIA

PROJECT: MAGNOLIA SCIENCE ACADEMY
PROJECT ADDRESS: 18220 SHERMAN WAY, RESEDA, CA91335
DRAWING TITLE: DISABLED ACCESS FORMS
DRAWN BY:
ISSUE DATE: 6/14/2017
JOB NUMBER:
DRAWING SCALE: AS NOTED
APPROVED BY:
DRAWING NUMBER: A0.2.1

1 ADA FORM– DETAIL FOR RESTROOMS AND DRINKING FOUNTAIN

INFORMATION BULLETIN / PUBLIC - BUILDING CODE
REFERENCE NO.: LABC Sec.11B-305,604,605 Effective: 01/01/2014
DOCUMENT NO.: P/BC 2014-087 Revised: 07/01/2015
Previously Issued As: P/BC 2011-087

ACCESSIBILITY DETAILS FOR RESTROOMS AND DRINKING FOUNTAINS

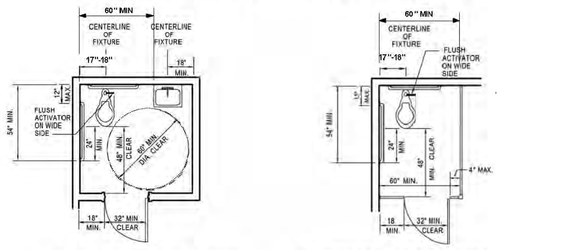

SINGLE-ACCOMMODATION TOILET FACILITY

ACCESSIBLE WATER CLOSET COMPARTMENT WITHIN A MULTIPLE-ACCOMMODATION TOILET FACILITY

Doors shall not swing into the clear floor space or clearance required for any fixture. Other than the door to the accessible water closet compartment, a door in any position, may encroach into the turning space by 12 inches maximum. (11B-603.2.3)
Exceptions: (2) Where the toilet room or bathing room is for individual use and a clear floor space complying with Section 11B-306.3 is provided within the room beyond the arc of the door swing, doors shall be permitted to swing into the clear floor space or clearance required for any fixture.

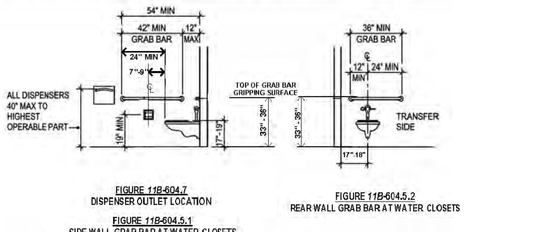

FIGURE 11B-604.7
DISPENSER OUTLET LOCATION

FIGURE 11B-604.5.1
SIDE WALL GRAB BAR AT WATER CLOSETS

FIGURE 11B-604.5.2
REAR WALL GRAB BAR AT WATER CLOSETS

THESE DIAGRAMS ILLUSTRATE THE SPECIFIC REQUIREMENTS OF THESE REGULATIONS AND ARE INTENDED ONLY AS AN AID FOR BUILDING DESIGN AND CONSTRUCTION.

As a covered entity under Title II of the Americans with Disabilities Act, the City of Los Angeles does not discriminate on the basis of disability and, upon request, will provide reasonable accommodation to ensure equal access to its programs, services and activities. For efficient handling of information internally and in the internet, conversion to this new format of code related and administrative information bulletins including MOD and RGA that were previously issued will also allow flexibility and timely distribution of information to the public.

P/BC 2014-087

THESE DIAGRAMS ILLUSTRATE THE SPECIFIC REQUIREMENTS OF THESE REGULATIONS AND ARE INTENDED ONLY AS AN AID FOR BUILDING DESIGN AND CONSTRUCTION.

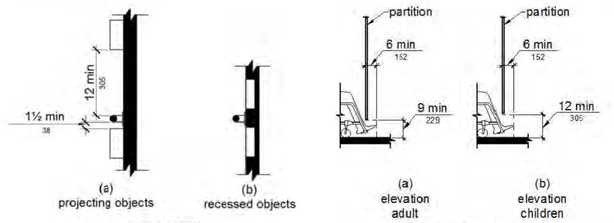

FIGURE 11B-609.3
SPACING OF GRAB BARS

FIGURE 11B-604.8.1.4
WHEELCHAIR ACCESSIBLE TOILET COMPARTMENT TOE CLEARANCE

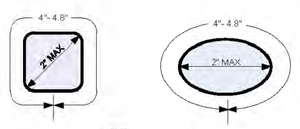

FIGURE 11B-609.2.2
GRAB BAR NON-CIRCULAR CROSS SECTION

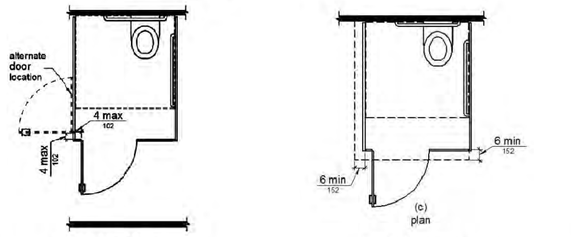

FIGURE 11B-604.8.1.2
WHEELCHAIR ACCESSIBLE TOILET COMPARTMENT DOORS

FIGURE 11B-604.8.1.4
WHEELCHAIR ACCESSIBLE TOILET COMPARTMENT TOE CLEARANCE

As a covered entity under Title II of the Americans with Disabilities Act, the City of Los Angeles does not discriminate on the basis of disability and, upon request, will provide reasonable accommodation to ensure equal access to its programs, services and activities. For efficient handling of information internally and in the internet, conversion to this new format of code related and administrative information bulletins including MOD and RGA that were previously issued will also allow flexibility and timely distribution of information to the public.

P/BC 2014-087

THESE DIAGRAMS ILLUSTRATE THE SPECIFIC REQUIREMENTS OF THESE REGULATIONS AND ARE INTENDED ONLY AS AN AID FOR BUILDING DESIGN AND CONSTRUCTION.

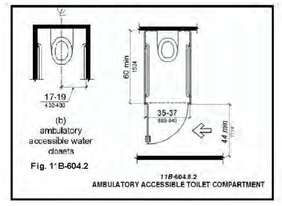

11B-604.8.2
AMBULATORY ACCESSIBLE TOILET COMPARTMENT

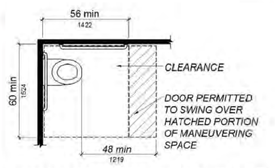

FIGURE 11B-604.3.1 - SIDE OF CLEARANCE AT WATER CLOSETS

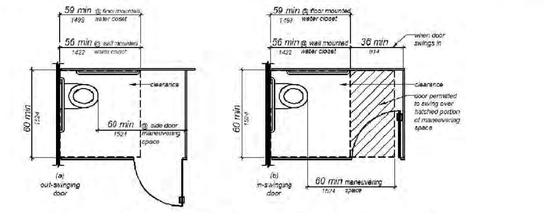

FIGURE 11B-604.8.1.1.2 - MANEUVERING SPACE WITH SIDE-OPENING DOOR

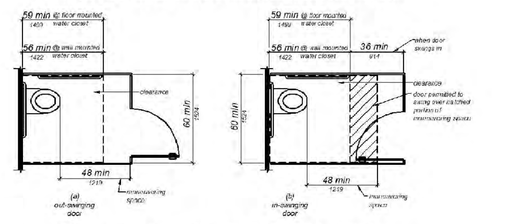

FIGURE 11B-604.8.1.1.3 - MANEUVERING SPACE WITH END-OPENING DOOR

As a covered entity under Title II of the Americans with Disabilities Act, the City of Los Angeles does not discriminate on the basis of disability and, upon request, will provide reasonable accommodation to ensure equal access to its programs, services and activities. For efficient handling of information internally and in the internet, conversion to this new format of code related and administrative information bulletins including MOD and RGA that were previously issued will also allow flexibility and timely distribution of information to the public.

P/BC 2014-087

THESE DIAGRAMS ILLUSTRATE THE SPECIFIC REQUIREMENTS OF THESE REGULATIONS AND ARE INTENDED ONLY AS AN AID FOR BUILDING DESIGN AND CONSTRUCTION.

SINK / URINAL

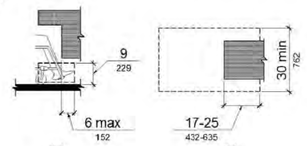

FIGURE 11B-306.2 - TOE CLEARANCE

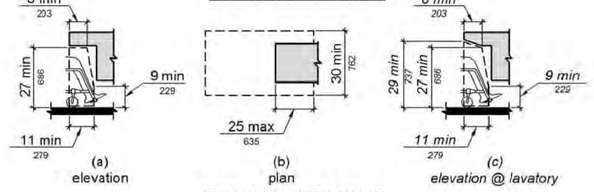

FIGURE 11B-306.3 - KNEE CLEARANCE

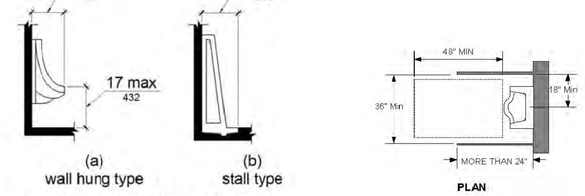

FIGURE 11B-605.2 - HEIGHT AND DEPTH OF URINALS

As a covered entity under Title II of the Americans with Disabilities Act, the City of Los Angeles does not discriminate on the basis of disability and, upon request, will provide reasonable accommodation to ensure equal access to its programs, services and activities. For efficient handling of information internally and in the internet, conversion to this new format of code related and administrative information bulletins including MOD and RGA that were previously issued will also allow flexibility and timely distribution of information to the public.

P/BC 2014-087

THESE DIAGRAMS ILLUSTRATE THE SPECIFIC REQUIREMENTS OF THESE REGULATIONS AND ARE INTENDED ONLY AS AN AID FOR BUILDING DESIGN AND CONSTRUCTION.

DRINKING FOUNTAINS

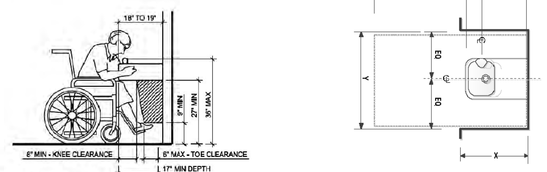

SPOUT HEIGHT AND KNEE CLEARANCE AT DRINKING FOUNTAINS

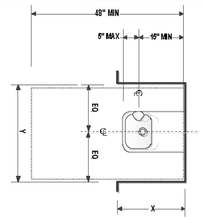

DRINKING FOUNTAIN SPOUT LOCATION
FIGURE 11B-602.5

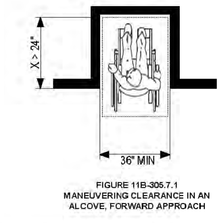

FIGURE 11B-305.7.1
MANEUVERING CLEARANCE IN AN ALCOVE, FORWARD APPROACH

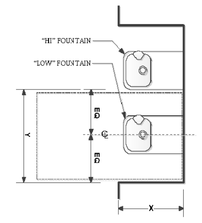

PLAN OF "HI-LOW" DRINKING FOUNTAIN

NOTE:
IF X = 18" MIN. ALCOVE DEPTH, THEN Y = 32" MIN.
IF ALCOVE DEPTH (X) IS GREATER THAN 24", THEN ALCOVE WIDTH (Y) MUST BE MINIMUM OF 36" CLEAR.

CLEAR FLOOR SPACE AT "HI-LOW" DRINKING FOUNTAIN ALCOVES

11B-602.6 WATER FLOW.
THE SPOUT SHALL PROVIDE A FLOW OF WATER 4 INCHES HIGH MINIMUM AND SHALL BE LOCATED 5 INCHES MAXIMUM FROM THE FRONT OF THE UNIT. THE ANGLE OF THE WATER STREAM SHALL BE MEASURED HORIZONTALLY RELATIVE TO THE FRONT FACE OF THE UNIT. WHERE SPOUTS ARE LOCATED LESS THAN 3 INCHES OF THE FRONT OF THE UNIT, THE ANGLE OF THE WATER STREAM SHALL BE 30 DEGREES MAXIMUM. WHERE SPOUTS ARE LOCATED BETWEEN 3 INCHES AND 5 INCHES MAXIMUM FROM THE FRONT OF THE UNIT, THE ANGLE OF THE WATER STREAM SHALL BE 15 DEGREES MAXIMUM.

11B-602.7 DRINKING FOUNTAINS FOR STANDING PERSONS.
SPOUT OUTLETS OF DRINKING FOUNTAINS FOR STANDING PERSONS SHALL BE 38 INCHES MINIMUM AND 43 INCHES MAXIMUM ABOVE THE FINISH FLOOR OR GROUND.

11B-602.9 PEDESTRIAN PROTECTION
ALL DRINKING FOUNTAINS SHALL EITHER BE LOCATED COMPLETELY WITHIN ALCOVES, POSITIONED COMPLETELY BETWEEN WING WALLS, OR OTHERWISE POSITIONED SO AS NOT TO ENCROACH INTO PEDESTRIAN WAYS. THE PROTECTED AREA WITHIN WHICH A DRINKING FOUNTAIN IS LOCATED SHALL BE 32 INCHES WIDE MINIMUM AND 19 INCHES DEEP MINIMUM, AND SHALL COMPLY WITH SECTION 11B-305.7. WHEN USED, WING WALLS OR BARRIERS SHALL PROJECT HORIZONTALLY AT LEAST 42 INCHES AND TO WITHIN 8 INCHES VERTICALLY FROM THE FLOOR OR GROUND SURFACE.

As a covered entity under Title II of the Americans with Disabilities Act, the City of Los Angeles does not discriminate on the basis of disability and, upon request, will provide reasonable accommodation to ensure equal access to its programs, services and activities. For efficient handling of information internally and in the internet, conversion to this new format of code related and administrative information bulletins including MOD and RGA that were previously issued will also allow flexibility and timely distribution of information to the public.

2 ADA FORM– DETAIL OF OBSTRUCTIONS, REACH, RANGES, CARD READERS & TELEPHONES

INFORMATION BULLETIN / PUBLIC - BUILDING CODE
REFERENCE NO.: LABC Sec. 11B-307,308,704 Effective: 01/01/2014
LABC Sec. 11C
DOCUMENT NO.: P/BC 2014-089 Revised: 07/01/2015
Previously Issued As: P/BC 2011-089

ACCESSIBILITY DETAILS FOR OBSTRUCTIONS, REACH RANGES, CARD READERS & TELEPHONES

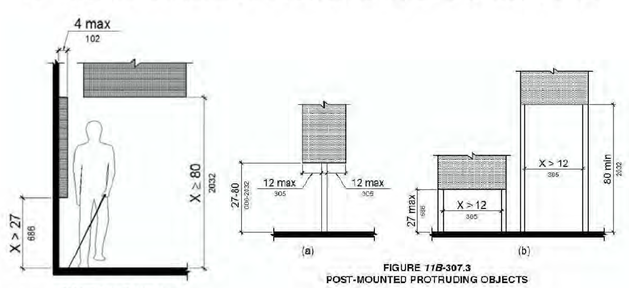

FIGURE 11B-307.2
LIMITS OF PROTRUDING OBJECTS

FIGURE 11B-307.3
POST-MOUNTED PROTRUDING OBJECTS

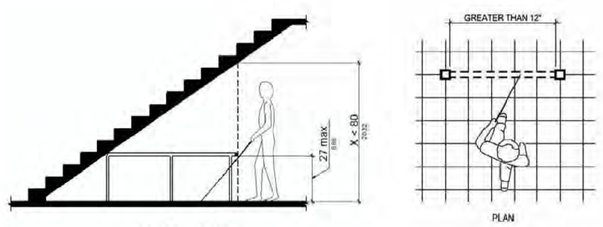

FIGURE 11B-307.4
VERTICAL CLEARANCE

THESE DIAGRAMS ILLUSTRATE THE SPECIFIC REQUIREMENTS OF THESE REGULATIONS AND ARE INTENDED ONLY AS AN AID FOR BUILDING DESIGN AND CONSTRUCTION

As a covered entity under Title II of the Americans with Disabilities Act, the City of Los Angeles does not discriminate on the basis of disability and, upon request, will provide reasonable accommodation to ensure equal access to its programs, services and activities. For efficient handling of information internally and in the internet, conversion to this new format of code related and administrative information bulletins including MOD and RGA that were previously issued will also allow flexibility and timely distribution of information to the public.

P/BC 2014-089

THESE DIAGRAMS ILLUSTRATE THE SPECIFIC REQUIREMENTS OF THESE REGULATIONS AND ARE INTENDED ONLY AS AN AID FOR BUILDING DESIGN AND CONSTRUCTION.

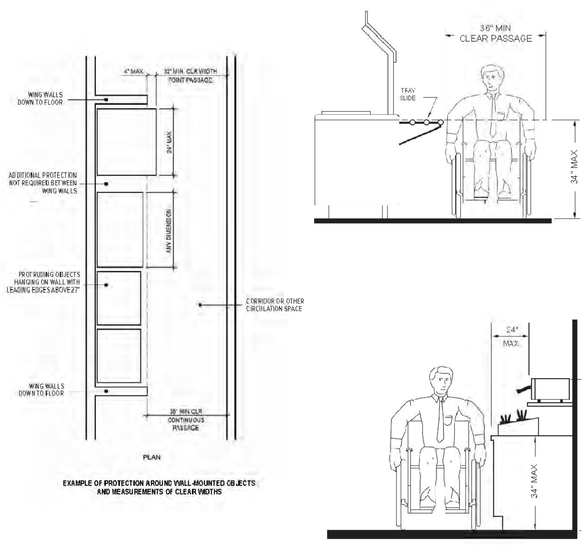

EXAMPLE OF PROTECTION AROUND WALL-MOUNTED OBJECTS AND REQUIREMENTS OF CLEAR WIDTHS

As a covered entity under Title II of the Americans with Disabilities Act, the City of Los Angeles does not discriminate on the basis of disability and, upon request, will provide reasonable accommodation to ensure equal access to its programs, services and activities. For efficient handling of information internally and in the internet, conversion to this new format of code related and administrative information bulletins including MOD and RGA that were previously issued will also allow flexibility and timely distribution of information to the public.

P/BC 2014-089

THESE DIAGRAMS ILLUSTRATE THE SPECIFIC REQUIREMENTS OF THESE REGULATIONS AND ARE INTENDED ONLY AS AN AID FOR BUILDING DESIGN AND CONSTRUCTION

REACH RANGE

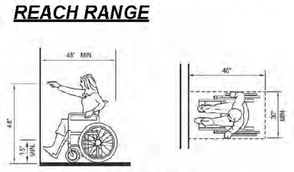

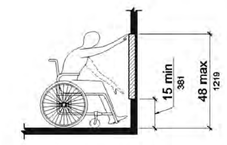

FIGURE 11B-308.2.1
UNOBSTRUCTED FORWARD REACH

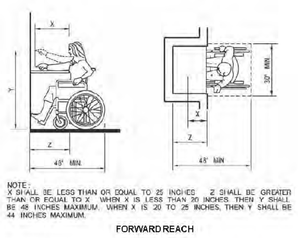

FORWARD REACH

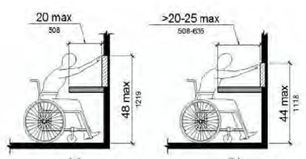

FIGURE 11B-308.2.2
OBSTRUCTED HIGH FORWARD REACH

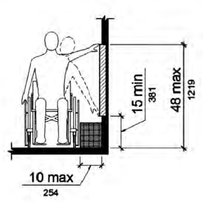

FIGURE 11B-308.3.1
UNOBSTRUCTED SIDE REACH

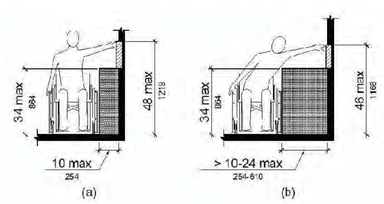

FIGURE 11B-308.3.2
OBSTRUCTED HIGH SIDE REACH

As a covered entity under Title II of the Americans with Disabilities Act, the City of Los Angeles does not discriminate on the basis of disability and, upon request, will provide reasonable accommodation to ensure equal access to its programs, services and activities. For efficient handling of information internally and in the internet, conversion to this new format of code related and administrative information bulletins including MOD and RGA that were previously issued will also allow flexibility and timely distribution of information to the public.

P/BC 2014-089

THESE DIAGRAMS ILLUSTRATE THE SPECIFIC REQUIREMENTS OF THESE REGULATIONS AND ARE INTENDED ONLY AS AN AID FOR BUILDING DESIGN AND CONSTRUCTION.

CARD READER

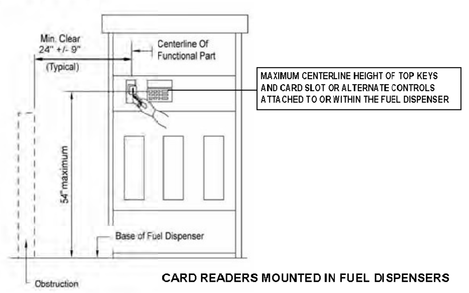

CARD READERS MOUNTED IN FUEL DISPENSERS

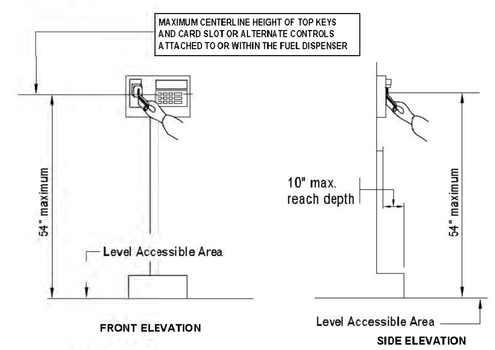

FRONT ELEVATION

SIDE ELEVATION

CARD READERS LOCATED ON FREE-STANDING PEDESTALS

As a covered entity under Title II of the Americans with Disabilities Act, the City of Los Angeles does not discriminate on the basis of disability and, upon request, will provide reasonable accommodation to ensure equal access to its programs, services and activities. For efficient handling of information internally and in the internet, conversion to this new format of code related and administrative information bulletins including MOD and RGA that were previously issued will also allow flexibility and timely distribution of information to the public.

P/BC 2014-089

THESE DIAGRAMS ILLUSTRATE THE SPECIFIC REQUIREMENTS OF THESE REGULATIONS AND ARE INTENDED ONLY AS AN AID FOR BUILDING DESIGN AND CONSTRUCTION.

TELEPHONES

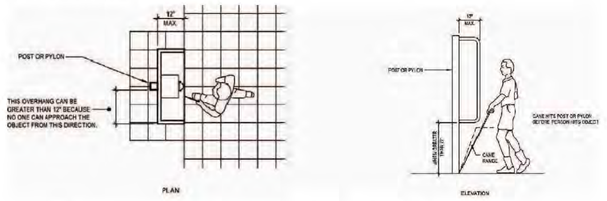

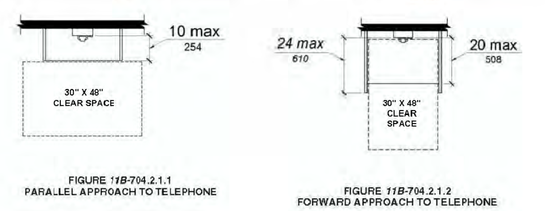

FIGURE 11B-704.2.1.1
PARALLEL APPROACH TO TELEPHONE

FIGURE 11B-704.2.1.2
FORWARD APPROACH TO TELEPHONE

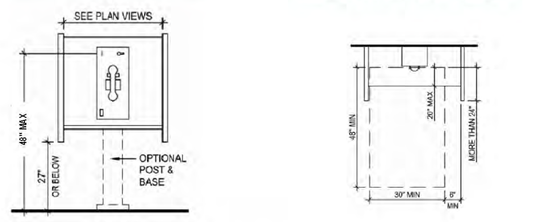

As a covered entity under Title II of the Americans with Disabilities Act, the City of Los Angeles does not discriminate on the basis of disability and, upon request, will provide reasonable accommodation to ensure equal access to its programs, services and activities. For efficient handling of information internally and in the internet, conversion to this new format of code related and administrative information bulletins including MOD and RGA that were previously issued will also allow flexibility and timely distribution of information to the public.

FRANCO ARCHITECTS INC.
12345 Ventura Blvd. H
Studio City, CA 91604
Tel 818 754-2030
Fax 818 754-2032
Architecture and Planning

MAGNOLIA SCIENCE ACADEMY
18220 SHERMAN WAY, RESEDA, CA91335

REV	DESCRIPTION	DATE
	PLAN CHECK #1	6/14/2017

LICENSED ARCHITECT JOHANN D. WANG C27010 4/30/2019 RENEWAL DATE STATE OF CALIFORNIA

PROJECT: MAGNOLIA SCIENCE ACADEMY
PROJECT ADDRESS: 18220 SHERMAN WAY, RESEDA, CA91335
DRAWING TITLE: DISABLED ACCESS FORMS
DRAWN BY:
ISSUE DATE: 6/14/2017
JOB NUMBER:
DRAWING SCALE: AS NOTED
APPROVED BY:
DRAWING NUMBER: A0.2.3

1 ADA FORM– ACCESSIBILITY DETAILS FOR CURBS, BLENDED TRANSITIONS, ISLANDS AND DETECTABLE WARNINGS

INFORMATION BULLETIN / PUBLIC - BUILDING CODE
REFERENCE NO.: LABC CHAPTER 11B Effective: 01/01/2014
DOCUMENT NO.: P/BC 2014-090 Revised: 09/25/2015

ACCESSIBILITY DETAILS FOR CURBS, BLENDED TRANSITIONS, ISLANDS AND DETECTABLE WARNINGS

GENERAL. Curb ramps, blended transitions and islands on accessible routes shall comply with Section 11B- 406. Curb ramps may be perpendicular, parallel, or a combination of perpendicular and parallel.

LANDINGS. Landings shall be provided at the tops of curb ramps and blended transitions. The landing clear length shall be 48 inches (1219 mm) minimum. The landing clear width shall be at least as wide as the curb ramp, excluding any flared sides, or the blended transition leading to the landing. **The slope of the landing in all directions shall be 1:48 maximum.**

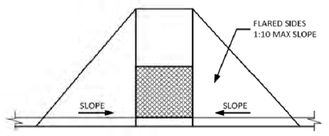

FIGURE 11B-406.2.2
SIDES OF CURB RAMPS

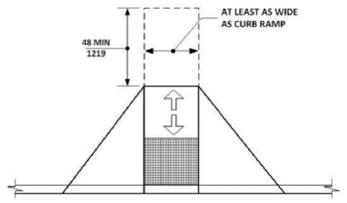

FIGURE 11B-406.5.3
LANDINGS AT THE TOP OF CURB RAMPS

TURNING SPACE. A turning space 48 inches (1219 mm) minimum by 48 inches (1219 mm) minimum shall be provided at the bottom of the curb ramp. The slope of the turning space in all directions shall be **1:48 max.**

LOCATION. Curb ramps and the flared sides of curb ramps shall be located so that they do not project into vehicular traffic lanes, parking spaces, or parking access aisles. Curb ramps at marked crossings shall be wholly contained within the markings, excluding any flared sides.

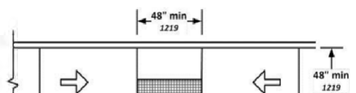

FIGURE 11B-406.3.2
PARALLEL CURB RAMPS

THESE DIAGRAMS ILLUSTRATES THE SPECIFICREQUIREMENTS OF THESE REGULATIONS AND ARE INTENDED ONLY AS AN AID FOR BUILDING DESIGN AND CONSTRUCTION.

As a covered entity under Title II of the Americans with Disabilities Act, the City of Los Angeles does not discriminate on the basis of disability and, upon request, will provide reasonable accommodation to ensure equal access to its programs, services and activities. For efficient handling of information internally and in the internet, conversion to this new format of code related and administrative information bulletins including MGD and RGA, that were previously issued will also allow flexibility and timely distribution of information to the public.

P/BC-2014-090

THESE DIAGRAMS ILLUSTRATES THE SPECIFIC REQUIREMENTS OF THESE REGULATIONS AND ARE INTENDED ONLY AS AN AID FOR BUILDING DESIGN AND CONSTRUCTION.

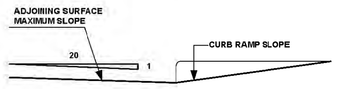

FIGURE 11B-406.5.8
COUNTER SLOPE OF SURFACES ADJACENT TO CURB RAMPS

Counter slope of adjoining gutters and road surfaces immediately adjacent to and within 24 inches (610 mm) of the curb ramp shall not be steeper than 1:20. The adjacent surfaces at transitions at curb ramps to walks, gutters, and streets shall be at the same level.**11B-406.5.8**

Clear space at diagonal curb ramps. The bottom of diagonal curb ramps shall have a clear space 48 inches (1219 mm) minimum outside active traffic lanes of the roadway. Diagonal curb ramps provided at marked crossings shall provide the 48 inches (1219 mm) minimum clear space within the markings.**11B-406.5.9**

Diagonal curb ramps. Diagonal or corner type curb ramps with returned curbs or other well-defined edges shall have the edges parallel to the direction of pedestrian flow. Diagonal curb ramps with flared sides shall have a segment of curb 24 inches (610 mm) long minimum located on each side of the curb ramp and within the marked crossing. **FIGURE 11B-406.5.10**

11B-406.6 Islands. Raised islands in crossings shall be cut through level with the street or have curb ramps at both sides. The clear width of the accessible route at islands shall be 60 inches (1524 mm) wide minimum. Where curb ramps are provided, they shall comply with Section 11B-406. Landings complying with Section 11B-406.5.3 and the accessible route shall be permitted to overlap. Islands shall have detectable warnings complying with Section 11B-705.

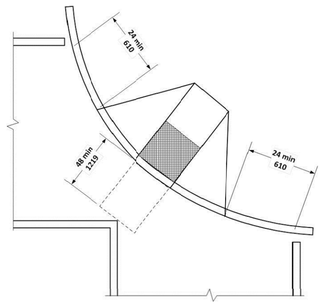

FIGURE 11B-406.5.10
DIAGONAL OR CORNER TYPE CURB RAMPS

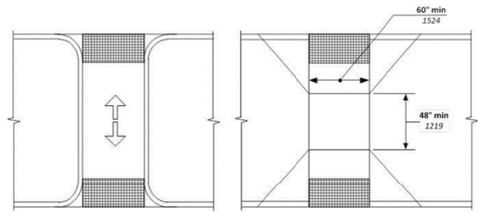

FIGURE 11B-406.6
ISLANDS IN CROSSINGS
(a) CUT THROUGH AT ISLAND
(b) CURB RAMP AT ISLAND

As a covered entity under Title II of the Americans with Disabilities Act, the City of Los Angeles does not discriminate on the basis of disability and, upon request, will provide reasonable accommodation to ensure equal access to its programs, services and activities. For efficient handling of information internally and in the internet, conversion to this new format of code related and administrative information bulletins including MGD and RGA that were previously issued will also allow flexibility and timely distribution o information to the public.

P/BC-2014-090

THESE DIAGRAMS ILLUSTRATES THE SPECIFIC REQUIREMENTS OF THESE REGULATIONS AND ARE INTENDED ONLY AS AN AID FOR BUILDING DESIGN AND CONSTRUCTION.

CURB RAMP

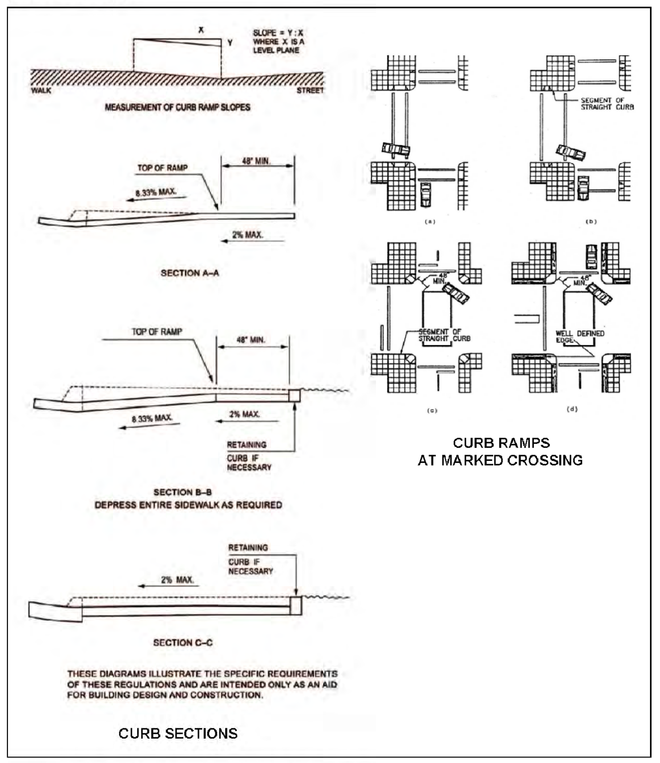

CURB RAMPS
AT MARKED CROSSING

CURB SECTIONS

As a covered entity under Title II of the Americans with Disabilities Act, the City of Los Angeles does not discriminate on the basis of disability and, upon request, will provide reasonable accommodation to ensure equal access to its programs, services and activities. For efficient handling of information internally and in the internet, conversion to this new format of code related and administrative information bulletins including MGD and RGA that were previously issued will also allow flexibility and timely distribution of information to the public.

P/BC-2014-090

THESE DIAGRAMS ILLUSTRATES THE SPECIFIC REQUIREMENTS OF THESE REGULATIONS AND ARE INTENDED ONLY AS AN AID FOR BUILDING DESIGN AND CONSTRUCTION.

DETECTABLE WARNING SURFACE

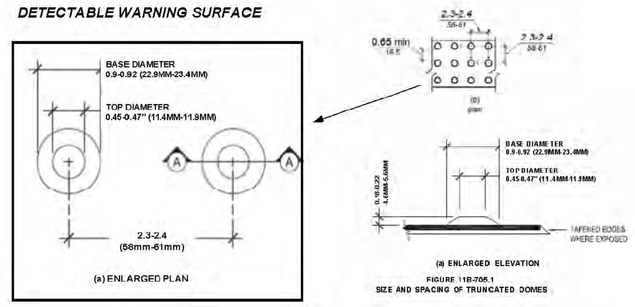

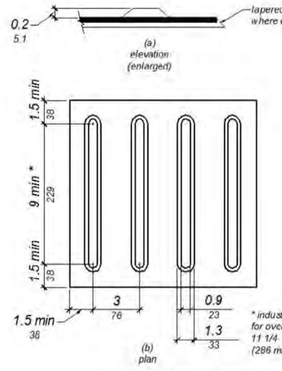

FIGURE 11B-705.2
DETECTABLE DIRECTIONAL TEXTURE

Detectable warnings shall consist of a surface of truncated domes and shall comply with Section 11B-705.

11B-705.1.1.3 Contrast. Detectable warning surfaces shall contrast visually with adjacent walking surfaces either light-on-dark, or dark-on-light. The material used to provide contrast shall be an integral part of the surface. Contrast shall be determined by:
Contrast = [(B1-B2)/(B1)] × 100 percent where B1 = light reflectance value (LRV) of the lighter area and B2 = light reflectance value (LRV) of the darker area.

Exception: Where the detectable warning surface does not adequately contrast with adjacent surfaces, a 1 inch (25 mm) wide black strip shall separate yellow detectable warning from adjacent surfaces.

11B-705.1.1.4 Resiliency. Detectable warning surfaces shall differ from adjoining surfaces in resiliency or sound-on-cane contact.

Exception: Detectable warning surfaces at curb ramps, islands or cut-through medians shall not be required to comply with Section 11B- 705.1.1.4

11B-705.1.1.5 Color. Detectable warning surfaces shall be yellow conforming to FS 33538 of Federal Standard 595C.

Exception: Detectable warning surfaces at curb ramps, islands or cut-through medians shall not be required to comply with Section 11B- 705.1.1.5

11B-705.2 Detectable directional texture. Detectable directional texture at transit boarding platforms shall comply with Figure 11B-705.2 and shall be 0.1 inch (2.5 mm) in height that tapers off to 0.04 inch (1.0 mm), with bars raised 0.2 inch (5.1 mm) from the surface. The raised bars shall be 1-3 inches (29 mm) wide and 8 inches (76 mm) from center-to center of each bar. This surface shall differ from adjoining walking surfaces in resiliency or sound-on-cane contact. The color shall be yellow conforming to Federal Color No. 33538. This surface will be placed directly behind the yellow detectable warning texure specified in Section 11B- 705.1.2.1, aligning with all doors of the transit vehicles where passengers will embark. The width of the directional texture shall be equal to the width of the transit vehicle's door opening. The depth of the texture shall not be less than 36 inches (914 mm).

As a covered entity under Title II of the Americans with Disabilities Act, the City of Los Angeles does not discriminate on the basis of disability and, upon request, will provide reasonable accommodation to ensure equal access to its programs, services and activities. For efficient handling of information internally and in the internet, conversion to this new format of code related and administrative information bulletins including MGD and RGA that were previously issued will also allow flexibility and timely distribution of information to the public.

2 ADA FORM– ACCESSIBILITY DETAILS FOR SIGNS

INFORMATION BULLETIN / PUBLIC - BUILDING CODE
REFERENCE NO.: LABC Sec.11B-703 Effective: 01/01/2014
DOCUMENT NO.: P/BC 2014-091 Revised: 07/01/2015
Previously Issued As: N/A

ACCESSIBILITY DETAILS FOR SIGNS

FIGURE 11B-703.7.2.1
INTERNATIONAL SYMBOL
OF ACCESSIBILITY
(ISA)

The International Symbol of Accessibility shall comply with Figure 11B-703.7.2.1. The symbol shall consist of a white figure on a blue background. The blue shall be FS 15090 in Federal Standard 595C

Volume control telephones. Telephones with a volume control shall be identified by a pictogram of a telephone handset with radiating sound waves on a square field such as shown in Figure 11B-703.7.2.3

FIGURE 11B-703.7.2.3
VOLUME CONTROL
TELEPHONE

FIGURE 11B-703.7.2.5
CLEANER AIR SYMBOL

Cleaner Air Symbol. Rooms, facilities and paths of travel that are accessible to and usable by people who are adversely impacted by airborne chemicals or particulate(s) and/or the use of electrical fixtures and/or devices shall be identified by the Cleaner Air Symbol complying with Figure 11B-703.7.2.5. This symbol is to be used strictly for publicly funded facilities or any facilities leased or rented by State of California, not concessionaires.

Assistive listening systems. Assistive listening systems shall be identified by the International Symbol of Access for Hearing Loss complying with Figure 11B-703.7.2.4

FIGURE 11B-703.7.2.4
INTERNATIONAL SYMBOL
FOR HEARING LOSS

FIGURE 11B-703.7.2.2
INTERNATIONAL SYMBOL
OF TTY

11B-703.7.2.2 International Symbol of TTY. The International Symbol of TTY shall comply with Figure 11B-703.7.2.2.

As a covered entity under Title II of the Americans with Disabilities Act, the City of Los Angeles does not discriminate on the basis of disability and, upon request, will provide reasonable accommodation to ensure equal access to its programs, services and activities. For efficient handling of information internally and in the internet, conversion to this new format of code related and administrative information bulletins including MGD and RGA that were previously issued will also allow flexibility and timely distribution o information to thepublic.

P/BC 2014-091

THESE DIAGRAMS ILLUSTRATES THE SPECIFIC REQUIREMENTS OF THESE REGULATIONS AND ARE INTENDED ONLY AS AN AID FOR BUILDING DESIGN AND CONSTRUCTION.

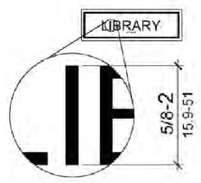

FIGURE 11B-703.2.5
HEIGHT OF RAISED CHARACTERS

11B-703 Signs

11B-703.1 General. Signs shall comply with Section 11B- 703. Where both visual and tactile characters are required, either one sign with both visual and tactile characters, or two separate signs, one with visual, and one with tactile characters, shall be provided.

11B-703.1.1 Plan review and Inspection. Signs as specified in Section 11B-703, or in other sections of this code, when included in the construction of new buildings or facilities, or when included, altered or replaced due to additions, alterations or renovations to existing buildings or facilities, and when a permit is required, shall comply with Sections 11B-703.1.1.1 and 11B-703.1.1.2.

11B-703.1.1.1 Plan review. Plans, specifications or other information indicating compliance with these regulations shall be submitted to the enforcing agency for review and approval.

11B-703.1.1.2 Inspection. Signs and identification devices shall be field inspected after installation and approved by the enforcing agency prior to the issuance of a final certificate of occupancy per Chapter 1, Division II, Section 111, or final approval where no certificate of occupancy is issued. The inspection shall include, but not be limited to, verification that Braille dots and cells are properly spaced and the size, proportion and type of raised characters are in compliance with these regulations.

TABLE 11B-703.3.1
BRAILLE DIMENSIONS

MEASUREMENT RANGE	MINIMUM IN INCHES MAXIMUM IN INCHES
Dot base diameter	0.059 – 0.063
Distance between two dots in the same cell	0.100
Distance between corresponding dots in adjacent cells	0.300
Dot height	0.025 – 0.037
Distance between corresponding dots from one cell directly below	0.395 – 0.400

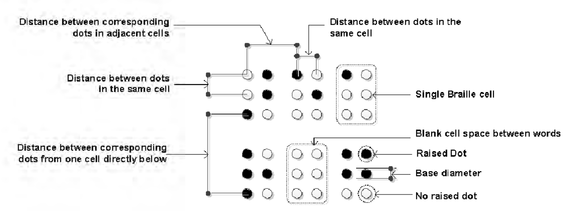

FIGURE 11B-703.3.1
BRAILLE MEASUREMENT

As a covered entity under Title II of the Americans with Disabilities Act, the City of Los Angeles does not discriminate on the basis of disability and, upon request, will provide reasonable accommodation to ensure equal access to its programs, services and activities. For efficient handling of information internally and in the internet, conversion to this new format of code related and administrative information bulletins including MGD and RGA that were previously issued will also allow flexibility and timely distribution of information to the public.

P/BC 2014-091

THESE DIAGRAMS ILLUSTRATES THE SPECIFIC REQUIREMENTS OF THESE REGULATIONS AND ARE INTENDED ONLY AS AN AID FOR BUILDING DESIGN AND CONSTRUCTION.

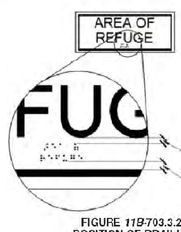

FIGURE 11B-703.3.2
POSITION OF BRAILLE

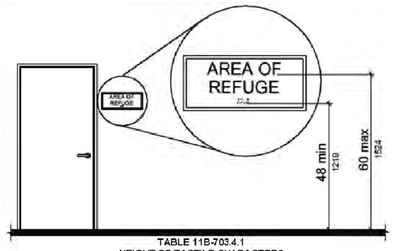

TABLE 11B-703.4.1
HEIGHT OF TACTILE CHARACTERS
ABOVE FINISH FLOOR OR GROUND

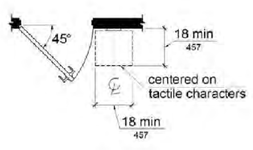

FIGURE 11B-703.5.2
LOCATION OF TACTILE SIGNS AT DOORS

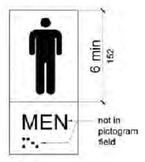

FIGURE 11B-703.6.1
PICTOGRAM FIELD

TABLE 11B-703.5.5
VISUAL CHARACTER HEIGHT

HEIGHT TO FINISH FLOOR OR GROUND FROM BASELINE OF CHARACTER	HORIZONTAL VIEWING DISTANCE	MINIMUM CHARACTER HEIGHT
40 inches (1016 mm) to less than or equal to 70 inches (1778 mm)	less than 72 inches (1829 mm)	5/8 inch (15.9 mm)
	72 inches (1829 mm) and greater	5/8 inch (15.9 mm), plus 1/8 inch (3.2 mm) per foot (305 mm) of viewing distance above 72 inches (1829 mm)
Greater than 70 inches (1778 mm) to less than or equal to 120 inches (3048 mm)	less than 180 inches (4572 mm)	2 inches (51 mm)
	180 inches (4572 mm) and greater	2 inches (51 mm), plus 1/8 inch (3.2 mm) per foot (305 mm) of viewing distance above 180 inches (4572 mm)
greater than 120 inches (3048 mm)	less than 21 feet (6401 mm)	3 inches (76 mm)
	21 feet (6401 mm) and greater	3 inches (76 mm), plus 1/8 inch (3.2 mm) per foot (305 mm) of viewing distance above 21 feet (6401 mm)

As a covered entity under Title II of the Americans with Disabilities Act, the City of Los Angeles does not discriminate on the basis of disability and, upon request, will provide reasonable accommodation to ensure equal access to its programs, services and activities. For efficient handling of information internally and in the internet, conversion to this new format of code related and administrative information bulletins including MGD and RGA that were previously issued will also allow flexibility and timely distribution of information to the public.

P/BC 2014-091

THESE DIAGRAMS ILLUSTRATES THE SPECIFIC REQUIREMENTS OF THESE REGULATIONS AND ARE INTENDED ONLY AS AN AID FOR BUILDING DESIGN AND CONSTRUCTION.

TOILETS AND BATHING FACILITIES GEOMETRIC SYMBOLS

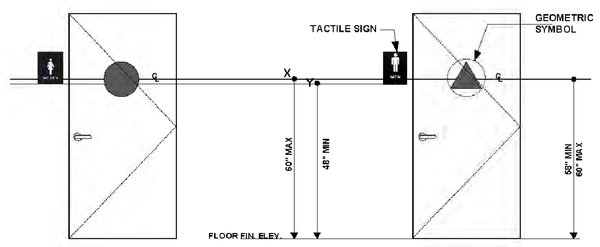

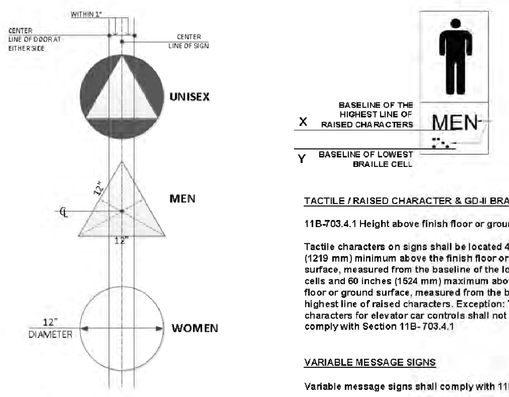

TACTILE / RAISED CHARACTER & GRADE BRAILLE SIGN

11B-703.4.1 Height above finish floor or ground.

Tactile characters on signs shall be located 48 inches (1219 mm) minimum above the finish floor or ground surface, measured from the baseline of the lowest Braille cells and 60 inches (1524 mm) maximum above the finish floor or ground surface, measured from the baseline of the highest line of raised characters. Exception: Tactile characters for elevator car controls shall not be required to comply with Section 11B-703.4.1

VARIABLE MESSAGE SIGNS

Variable message signs shall comply with 11B-703.8

As a covered entity under Title II of the Americans with Disabilities Act, the City of Los Angeles does not discriminate on the basis of disability and, upon request, will provide reasonable accommodation to ensure equal access to its programs, services and activities. For efficient handling of information internally and in the internet, conversion to this new format of code related and administrative information bulletins including MGD and RGA that were previously issued will also allow flexibility and timely distribution of information to the public.

FRANCO ARCHITECTS INC.
12345 Ventura Blvd. H
Studio City, CA 91604
Tel 818 754-2030
Fax 818 754-2032
Architecture and Planning

MAGNOLIA SCIENCE ACADEMY
18220 SHERMAN WAY, RESEDA, CA91335

REV	DESCRIPTION	DATE
	PLAN CHECK #1	6/14/2017

LICENSED ARCHITECT
JOHANN D. WANG
C27010
4/30/2019
RENEWAL DATE
STATE OF CALIFORNIA

PROJECT
MAGNOLIA SCIENCE ACADEMY

PROJECT ADDRESS
18220 SHERMAN WAY,
RESEDA, CA91335

DRAWING TITLE
DISABLED
ACCESS FORMS

DRAWN BY
ISSUE DATE
6/14/2017

JOB NUMBER
DRAWING SCALE
AS NOTED

APPROVED BY:

DRAWING NUMBER
A0.2.4

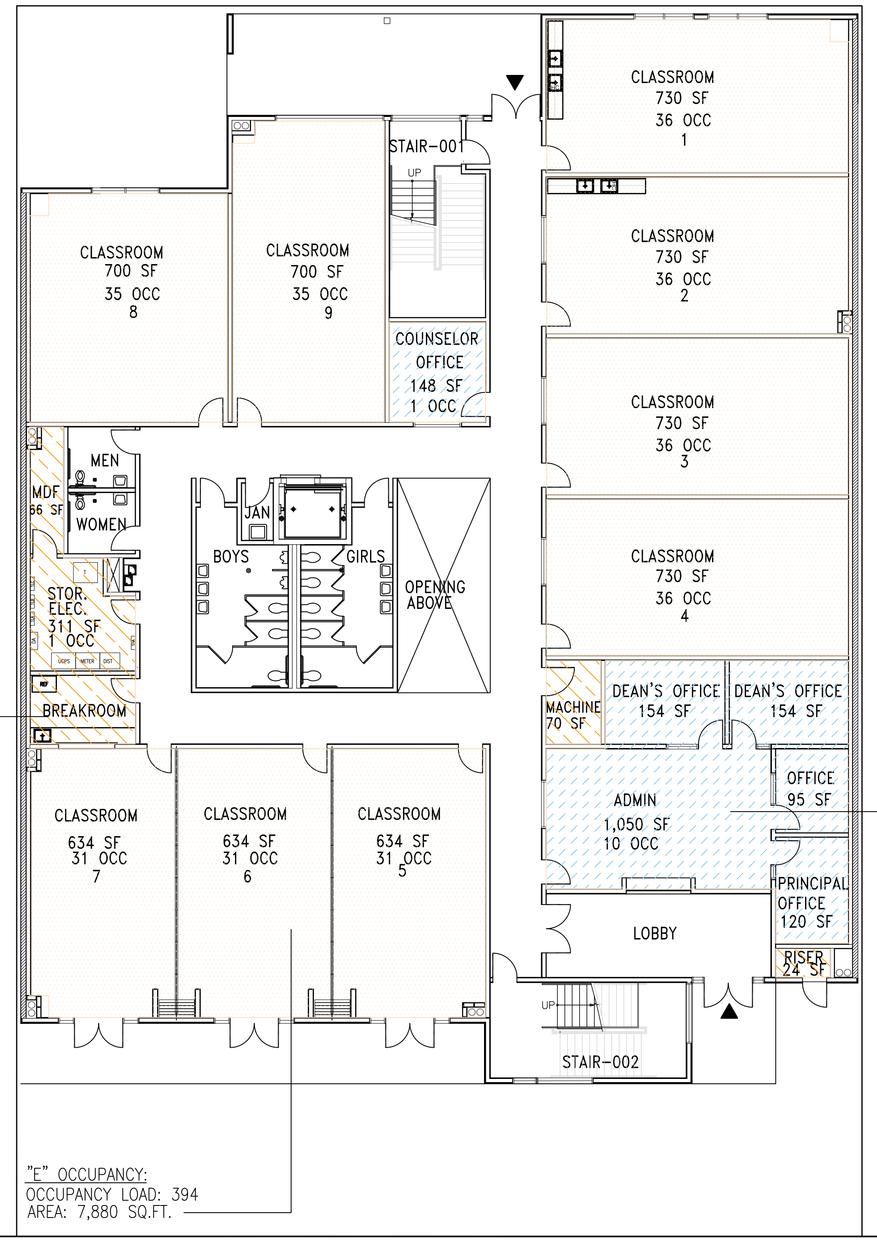

1 FIRST FLOOR PLAN
SCALE: 3/32" = 1'-0"

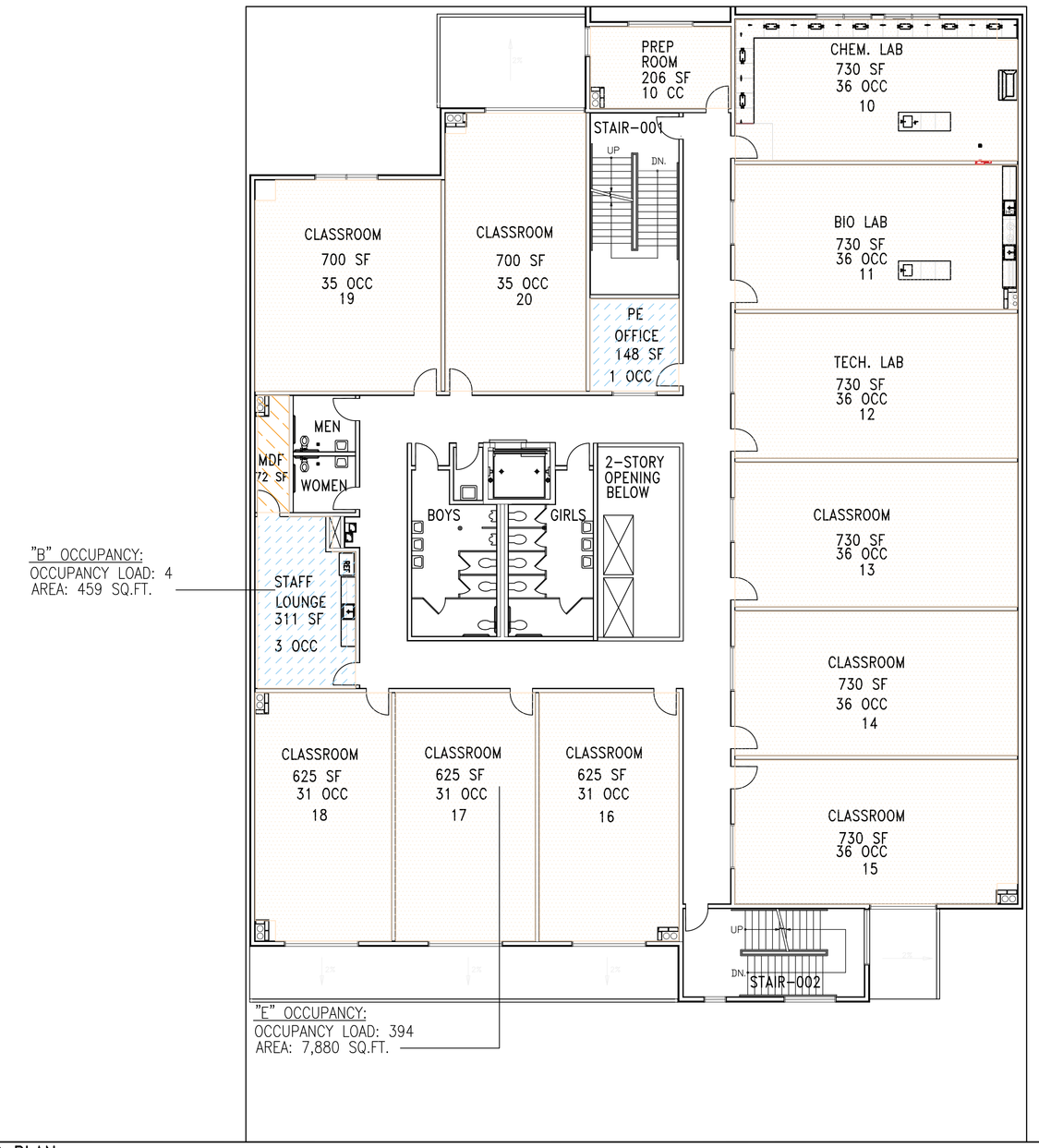

2 SECOND FLOOR PLAN
SCALE: 3/32" = 1'-0"

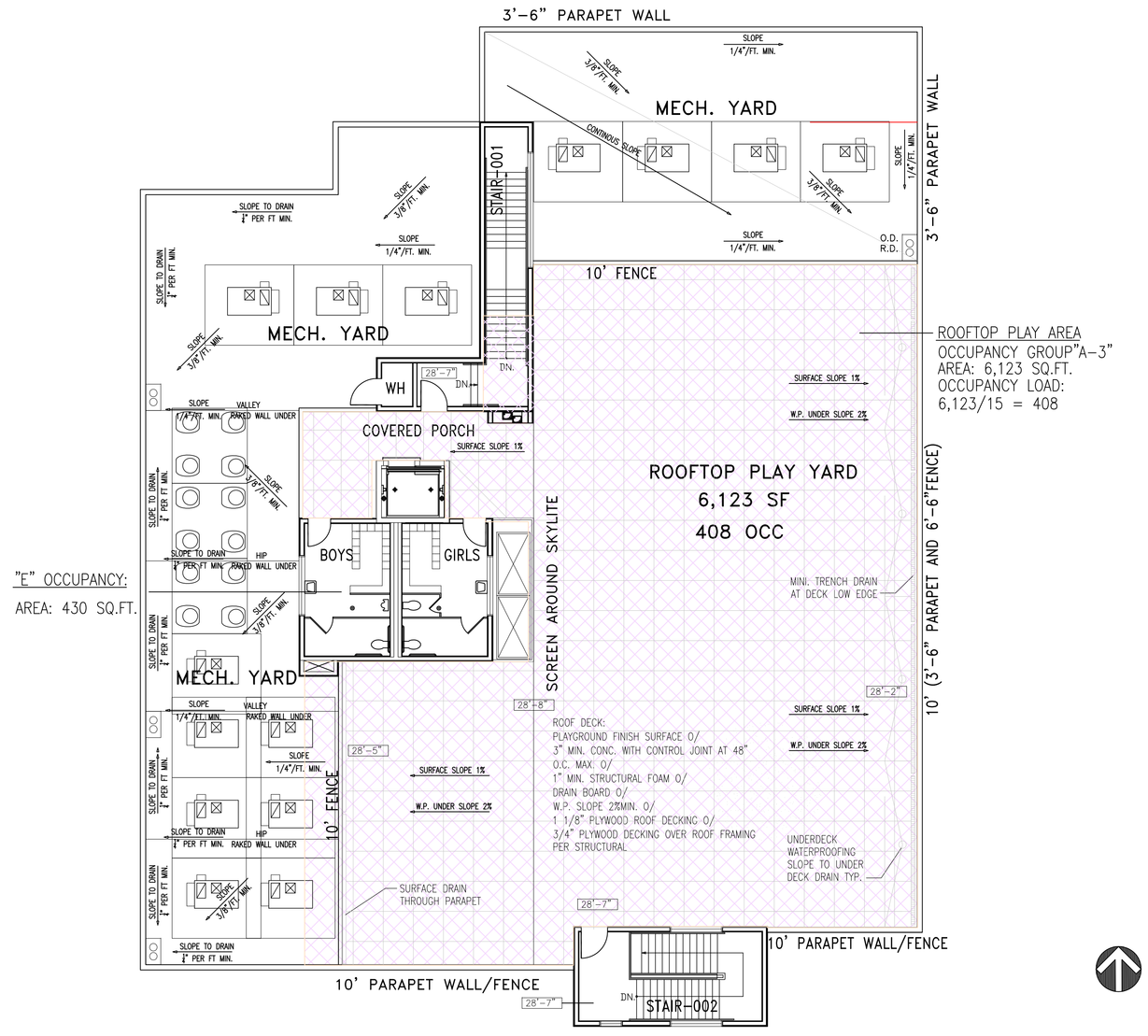

3 ROOF PLAN
SCALE: 3/32" = 1'-0"

CONSTRUCTION TYPE: TYPE III-B WITH SUPERVISED AUTOMATIC SPRINKLER SYSTEM THROUGHOUT
2 HR RATED EXTERIOR BEARING WALL CONSTRUCTION,

ALLOWABLE FLOOR AREAS

2016 CALIFORNIA BUILDING CODE SECTION 506

FLOOR AREA: THE AREA INCLUDED WITHIN SURROUNDING EXTERIOR WALLS (OR EXTERIOR WALLS AND FIRE WALLS) EXCLUSIVE OF VENT SHAFTS AND COURTS. AREA OF THE BUILDING NOT PROVIDED WITH SURROUNDING WALLS SHALL BE INCLUDED IN THE BUILDING AREA IF SUCH AREAS ARE INCLUDED WITHIN THE HORIZONTAL PROJECTION OF THE ROOF OR FLOOR ABOVE.

OCCUPANCY TYPE: E AND B

TOTAL GROSS FLOOR AREA:
1ST FLR. GROSS AREA: 13,140 SF
2ND FLR. GROSS AREA: 11,242 SF
ROOF GROSS AREA: 473 SF
TOTAL: 24,855 SF

TOTAL NET ACTUAL FLOOR AREA:
1ST FLOOR AREA: 12,840 SF
2ND FLOOR AREA: 10,940 SF
ROOF FLOOR AREA: 430 SF
TOTAL: 24,212 SF

ALLOWABLE NUMBER OF STORIES

ALLOWABLE NUMBER OF STORIES: 3 (WITH SPRINKLER INCREASE)

GROUND FLOOR – ALLOWABLE FLOOR AREA FOR EACH OCCUPANCY

B OCCUPANCY PER STORY:

TABULATED ALLOWABLE FLOOR AREA FOR B OCCUPANCY PER TABLE 506.2

ALLOWABLE BUILDING HEIGHT: 75' (PER TABLE 504.4)
ALLOWABLE BUILDING FLOOR AREAS: 57,000 SF (PER TABLE 506.2)
ACTUAL BUILDING GROUND FLOOR AREAS (FOR B OCCUPANCY): 1,198 SF

E OCCUPANCY PER STORY:

TABULATED ALLOWABLE FLOOR AREA FOR E OCCUPANCY PER TABLE 506.2

ALLOWABLE BUILDING HEIGHT: 75' (PER TABLE 504.3)
ALLOWABLE BUILDING FLOOR AREAS: 14,500 SF (PER TABLE 506.2)

ACTUAL BUILDING SECOND FLOOR AREAS (FOR E OCCUPANCY):
12,840 SF-1,198 SF -479 SF =11,163 SF

S-2 OCCUPANCY PER STORY:

TABULATED ALLOWABLE FLOOR AREA FOR S-2 OCCUPANCY PER TABLE 506.2

ALLOWABLE BUILDING HEIGHT: 75' (PER TABLE 504.3)
BUILDING FLOOR AREAS: 78,000 SF (PER TABLE 506.2)

ACTUAL BUILDING GROUND FLOOR AREAS (FOR S-2 OCCUPANCY): 479 SF

LEGENDS OF OCCUPANCY

A-3 OCCUPANCY
ROOFTOP OUTDOOR AREA

S-2

B OCCUPANCY
OFFICE AREA

E OCCUPANCY
CLASSROOMS

SECOND FLOOR – ALLOWABLE FLOOR AREA FOR EACH OCCUPANCY

E OCCUPANCY PER STORY:

TABULATED ALLOWABLE FLOOR AREA FOR E OCCUPANCY PER TABLE 506.2

ALLOWABLE BUILDING HEIGHT: 75' (PER TABLE 504.3)
ALLOWABLE BUILDING FLOOR AREAS: 14,500 SF (PER TABLE 506.2)

ACTUAL BUILDING SECOND FLOOR AREAS (FOR E OCCUPANCY):
10,940 SF -459 SF - 72 SF = 10,409 SF

B OCCUPANCY PER STORY:

TABULATED ALLOWABLE FLOOR AREA FOR B OCCUPANCY PER TABLE 506.3

ALLOWABLE BUILDING HEIGHT: 75' (PER TABLE 504.3)
ALLOWABLE BUILDING FLOOR AREAS: 57,000 SF (PER TABLE 506.2)

ACTUAL BUILDING GROUND FLOOR AREAS (FOR B OCCUPANCY): 459 SF

S-2 OCCUPANCY PER STORY:

TABULATED ALLOWABLE FLOOR AREA FOR S-2 OCCUPANCY PER TABLE 506.2

ALLOWABLE BUILDING HEIGHT: 75' (PER TABLE 504.3)
ALLOWABLE BUILDING FLOOR AREAS: 78,000 SF (PER TABLE 506.2)

ACTUAL BUILDING GROUND FLOOR AREAS (FOR S-2 OCCUPANCY): 72 SF

ROOF LEVEL – ALLOWABLE FLOOR AREA FOR EACH OCCUPANCY

E OCCUPANCY PER STORY:

TABULATED ALLOWABLE FLOOR AREA FOR E OCCUPANCY PER TABLE 506.2

ALLOWABLE BUILDING HEIGHT: 75' (PER TABLE 504.3)
ALLOWABLE BUILDING FLOOR AREAS: 14,500 SF (PER TABLE 506.2)

ACTUAL BUILDING SECOND FLOOR AREAS (FOR E OCCUPANCY): 430 SF

ALLOWABLE BUILDING AREA CHECK

GROUND FLOOR PER 508.4.2

E OCCUPANCY $\frac{\text{ACTUAL SF}}{\text{ALLOWABLE SF}} = \frac{11{,}163\text{ SF}}{14{,}500\text{ SF}} = 0.77$

S-2 OCCUPANCY $\frac{\text{ACTUAL SF}}{\text{ALLOWABLE SF}} = \frac{479\text{ SF}}{78{,}000\text{ SF}}$ 0.006

B OCCUPANCY $\frac{\text{ACTUAL SF}}{\text{ALLOWABLE SF}} = \frac{1{,}198\text{ SF}}{57{,}000\text{ SF}} = 0.02$

0.77 + 0.006 + 0.02 = 0.796 < 1

2ND FLOOR PER 508.4.2

E OCCUPANCY $\frac{\text{ACTUAL SF}}{\text{ALLOWABLE SF}} = \frac{10{,}409}{14{,}500\text{ SF}} = 0.72$

B OCCUPANCY $\frac{\text{ACTUAL SF}}{\text{ALLOWABLE SF}} = \frac{459\text{ SF}}{57{,}000\text{ SF}} = 0.008$

S-2 OCCUPANCY $\frac{\text{ACTUAL SF}}{\text{ALLOWABLE SF}} = \frac{72\text{ SF}}{78{,}000\text{ SF}}$ 0.0009

0.72 + 0.008 + 0.0009 = 0.7289 < 1

3RD FLOOR PER 508.4.2

E OCCUPANCY $\frac{\text{ACTUAL SF}}{\text{ALLOWABLE SF}} = \frac{430\text{ SF}}{14{,}500\text{ SF}} = 0.03 < 1$

OCCUPANCY SEPARATION:

NO SEPARATION IS REQUIRED BETWEEN ACCESSORY OCCUPANCY AND THE MAIN OCCUPANCY, PER SEC. 508.2.4

NO SEPARATION IS REQUIRED BETWEEN A, E, B, S-2 IN SPRINKLERED BUILDING, PER TABLE 508.4

4 BUILDING LIMITATION CALCULATION
SCALE: 3/32" = 1'-0"

FRANCO ARCHITECTS INC.
12345 Ventura Blvd. H
Studio City, CA 91604
Tel 818 754-2030
Fax 818 754-2032
Architecture and Planning

MAGNOLIA SCIENCE ACADEMY
18220 SHERMAN WAY, RESEDA, CA91335

REV	DESCRIPTION	DATE
	PLAN CHECK #1	6/14/2017

LICENSED ARCHITECT
JOHANN D. WANG
C27010
4/30/2019
RENEWAL DATE
STATE OF CALIFORNIA

PROJECT: MAGNOLIA SCIENCE ACADEMY
PROJECT ADDRESS: 18220 SHERMAN WAY, RESEDA, CA91335
DRAWING TITLE: BUILDING LIMITATIONS
DRAWN BY:
ISSUE DATE: 6/14/2017
JOB NUMBER:
DRAWING SCALE: AS NOTED
APPROVED BY:
DRAWING NUMBER: A0.4

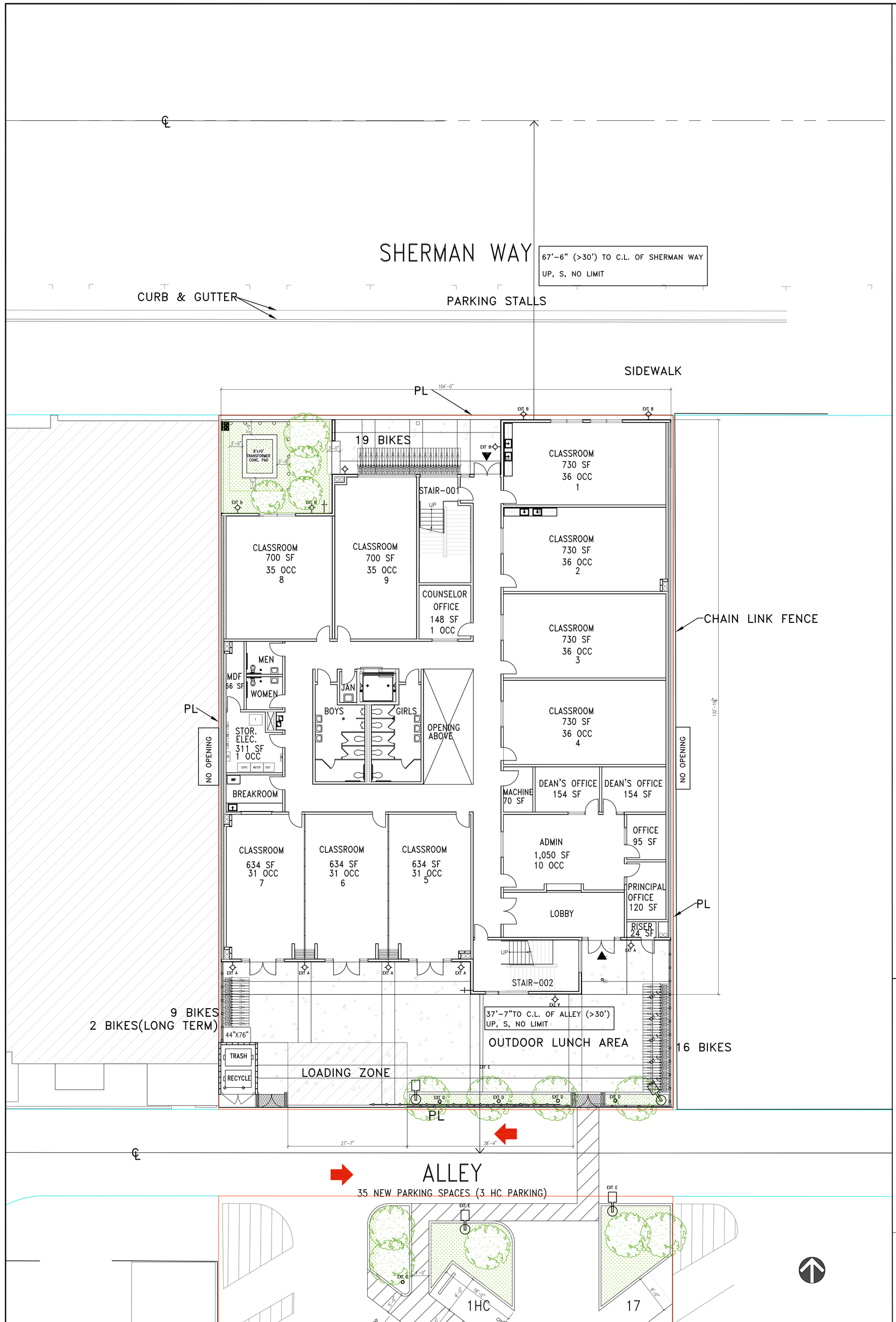

1 WALL OPENING ANALYSIS
SCALE: 1/16" = 1'-0"

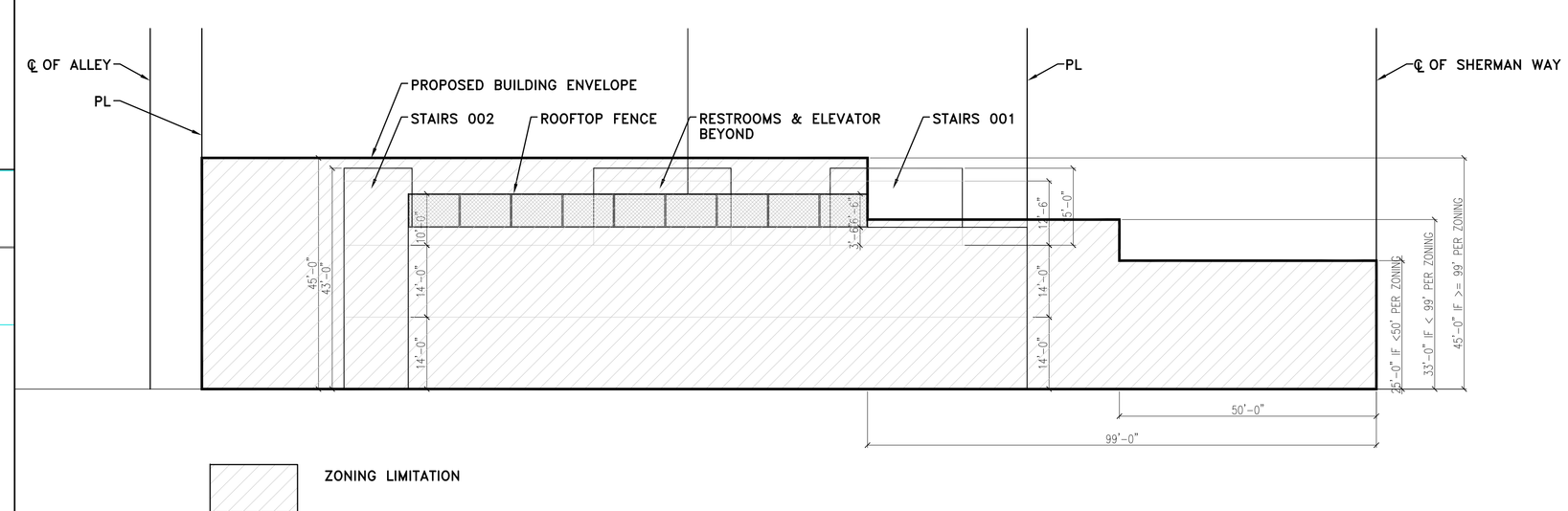

4 ZONING ENVELOPE REQUIREMENT
SCALE: 1/16" = 1'-0"

FRANCO ARCHITECTS INC.
12345 Ventura Blvd. H
Studio City, CA 91604
Tel 818 754-2030
Fax 818 754-2032
Architecture and Planning

MAGNOLIA SCIENCE ACADEMY
18220 SHERMAN WAY, RESEDA, CA91335

REV	DESCRIPTION	DATE
	PLAN CHECK #1	6/14/2017

LICENSED ARCHITECT
JOHANN D. WANG
C27010
4/30/2019
RENEWAL DATE
STATE OF CALIFORNIA

PROJECT
MAGNOLIA SCIENCE ACADEMY

PROJECT ADDRESS
18220 SHERMAN WAY, RESEDA, CA91335

DRAWING TITLE
BUILDING LIMITATION

DRAWN BY
ISSUE DATE 6/14/2017
JOB NUMBER
DRAWING SCALE AS NOTED
APPROVED BY:

DRAWING NUMBER
A0.4A

SITE PLAN
SCALE: 1/16" = 1'-0"

LEGEND

- VEHICULAR CIRCULATION ROUTE
- PATH OF TRAVEL
- PATH OF EGRESS

SITE KEY NOTES

1. HC STRIPING, SEE SHEET A0.2 FIG. 11B-502.2
2. CONCRETE WHEEL STOP TYP. SEE DETAIL 1/D1.0
3. NEW 8'-0" HT. 26'-0" WIDE W.I. SLIDING GATE, SEE DOOR SCHEDULE
4. TRASH/RECYCLING ENCLOSURE W/ 8' HT. SPLIT-FACE PROTO II WALL, SEE A8.3
5. LANDSCAPE AREA. SEE LANDSCAPE PLANS
6. BICYCLE PARKING
   PROVIDED – LONG-TERM BICYCLE PARKING SPACES
   6C LOCKABLE, PERMANENTLY ANCHORED BIKE LOCKER FOR 2 BIKES
   SPECS: CREATIVE PIPE INC. OR EQUAL
   MODEL: CS2-GFRP FIBERGLASS BIKE LOCKER
   COLOR: T.B.D.
   PROVIDED 88 – SHORT-TERM BICYCLE PARKING SPACES SPECS.:
   1. FLOOR MOUNTED: CREATIVE PIPE INC. OR EQUAL
      6A TB 5-F-P
      (3 TO 5 BIKE CAPACITY)
      COLOR: T.B.D.
   2. WALL MOUNTED: BELSON VERTICAL WALL MOUNTED BIKE STORAGE RACK
      6B BSV-1-WM-P
      COLOR: T.B.D.
7. DESIGNATED PARKING FOR ANY COMBINATION OF LOW-EMITTING, FUEL-EFFICIENT & CARPOOL/VAN POOL VEHICLES. PAINT "CLEAN AIR/VANPOOL/EV" WORDS WORDS ON GROUND AS SHOWN ON PLAN. THE LOWER EDGE OF THE LAST WORD ALIGNS WITH THE END OF THE STALL STRIPING AND IS VISIBLE BENEATH A PARKED VEHICLE. PAINT COLOR TO MATCH STALL STRIPING.
   PROVIDE 12 PERCENT OF TOTAL DESIGNATED PARKING SPACES FOR ANY COMBINATION OF LOW-EMITTING, FUEL-EFFICIENT,AND CARPOOL/VAN POOL VEHICLES (PROVIDE 2)
8. SCORED CONCRETE PAVING, SEE DETAIL 5/D1.0
9. REPAIR ALL BROKEN, OFF-GRADE OR BAD ORDER CONCRETE CURB, GUTTER AND EXISTING SIDEWALK ALONG THE PROPERTY FRONTAGE.
10. DOUBLE STRIPING OF STALLS SHALL BE PER FIG.7 OF THE CITY OF LA BLDG. DEPT. STANDARDS
11. 3' H. BOLLARD WITH POWER OUTLETS FOR ELECTRICAL CHARGING STATIONS TWO DEDICATED 208/240V 40 AMP, GROUNDED AC OUTLETS SHALL BE PROVIDED (ONE FOR EACH PARKING SPACE). SEE ELECTRICAL PLAN
12. PAINT LETTERS "VISITOR" ON GROUND.
13. 5' WROUGHT IRON FENCE ON TOP OF THE 3' MASONRY WALL W/PERFORATED PANEL, NO MORE THAN 50% OF THE FACE IS OPEN, SEE 9/8.3
14. PROVIDE DOOR BUZZER AND COMUNICATION DEVICE WITH CONDUIT TO MAIN ENTRANCE
15. PAINT LETTERS "NO PARKING DURING DROP-OFF/PICK-UP HOURS" ON GROUND
16. NEW VAULT TRANSFORMER, SEE ELECTRICAL PLANS
17. CONC. CURB, SEE DETAIL 2/D1.0
18. FDC
19. INSTALL A HOSE BIB AT THIS LOCATION. REFER TO PLUMBING ENGINEERING PLANS FOR FURTHER INFO.
20. 3'-0" WIDE BAND OF DETECTABLE WARNING, W/TRUNCATED DOMES, DETAIL SEE 1/A0.2.5
21. CONCRETE BENCH

SITE LIGHTING LEGEND

EXT A	LED WALL MOUNTED LIGHT; BY WAC LIGHTING WP-LED335-50-WT
EXT B	LED WALL MOUNTED LIGHT; BY SHARPER LIGHTING 674-WP SERIES- 674-31"-WP-L3/830- ALP
EXT C	6-INCH RECESSED LED FIXTURE; BY COOPER LIGHTING EATON HALO COMMERCIAL- PD6-30-D010-PDMGA-835-61V-C
EXT D	PLANTER LIGHT LED LAMP FIXTURE BY COOPER LIGHTING LUMIERE, CAMBRIA 203-6LED5741-12-CS/NSS
EXT E	EXTERIOR POLE MOUNTED FIXTURE WITH 1-HEAD; BY DECO LIGHTING D824-LED-30/28W-50-UNV-LP-T5-PM-SL EXTERIOR POLE FOR FIXTURE WITH 1-HEAD; BY DECO LIGHTING DP4S-5-12-DM1-SLV

FRANCO ARCHITECTS INC.
12345 Ventura Blvd. H
Studio City, CA 91604
Tel 818 754-2030
Fax 818 754-2032
Architecture and Planning

MAGNOLIA SCIENCE ACADEMY
18220 SHERMAN WAY, RESEDA, CA91335

REV	DESCRIPTION	DATE
	PLAN CHECK #1	6/14/2017

LICENSED ARCHITECT
JOHANN D. WINDT
C27010
4/30/2019
RENEWAL DATE
STATE OF CALIFORNIA

PROJECT
MAGNOLIA SCIENCE ACADEMY

PROJECT ADDRESS
18220 SHERMAN WAY, RESEDA, CA91335

DRAWING TITLE
ENLARGED SITE PLAN

DRAWN BY
ISSUE DATE 6/14/2017
JOB NUMBER
DRAWING SCALE AS NOTED
APPROVED BY:

DRAWING NUMBER
A0.5

FRANCO ARCHITECTS INC.
12345 Ventura Blvd. H
Studio City, CA 91604
Tel 818 754-2030
Fax 818 754-2032
Architecture and Planning

MAGNOLIA SCIENCE ACADEMY
18220 SHERMAN WAY, RESEDA, CA91335

REV	DESCRIPTION	DATE
	PLAN CHECK #1	6/14/2017

LICENSED ARCHITECT
JOHANN D. WANG
C27010
4/30/2019
RENEWAL DATE
STATE OF CALIFORNIA

PROJECT
MAGNOLIA SCIENCE ACADEMY

PROJECT ADDRESS
18220 SHERMAN WAY, RESEDA, CA91335

DRAWING TITLE
PARKING LOT PLAN

DRAWN BY
ISSUE DATE 6/14/2017
JOB NUMBER
DRAWING SCALE AS NOTED
APPROVED BY:

DRAWING NUMBER
A0.6

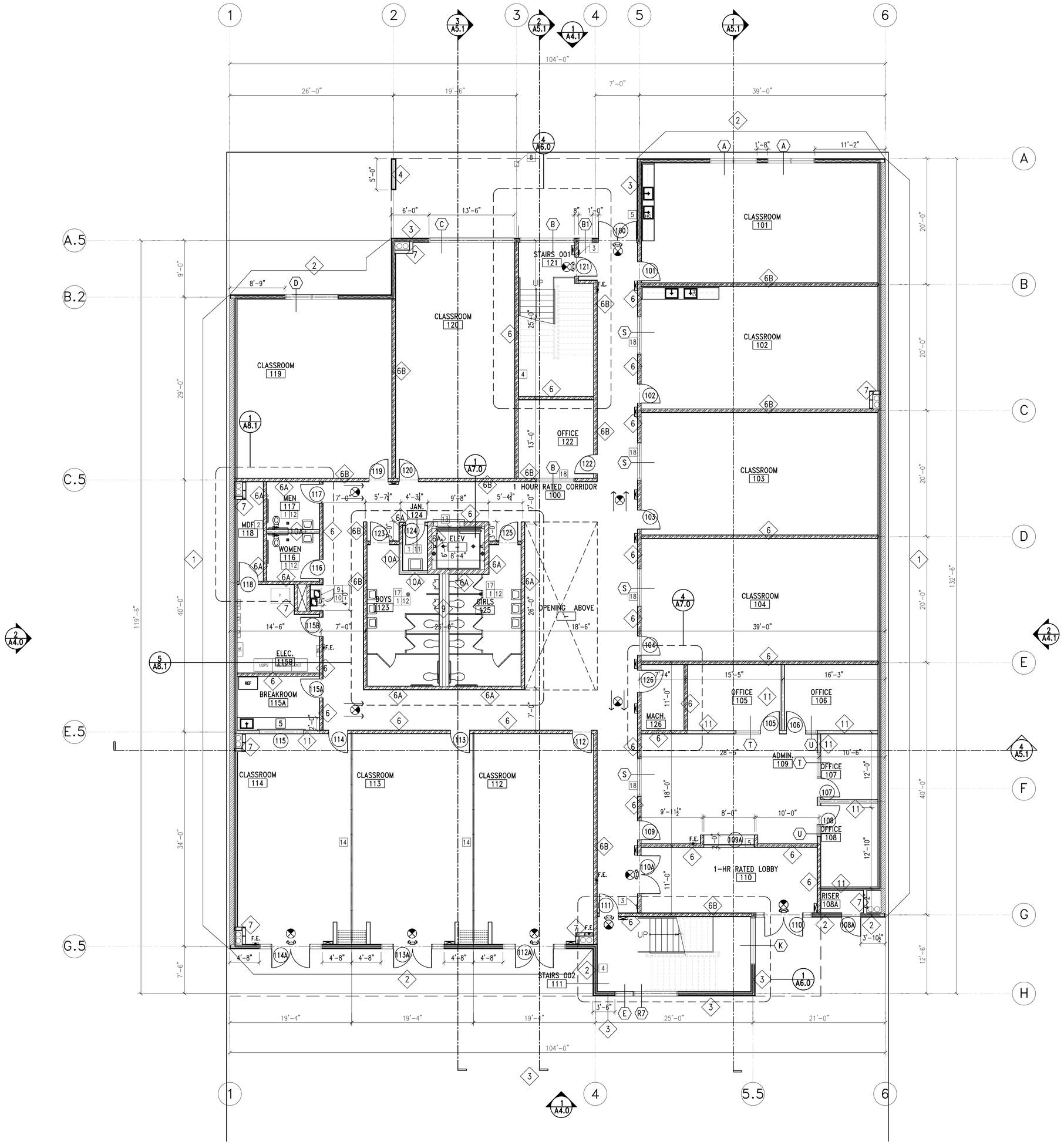

FIRST FLOOR CONSTRUCTION PLAN

SCALE: 1/8" = 1'-0"

SEE A2.1 FOR GENERAL NOTES

BUILDING DEPARTMENT NOTES

1. THIS BUILDING MUST BE EQUIPPED WITH AN AUTOMATIC FIRE EXTINGUISHING SYSTEM.
2. FIRE SPRINKLERS SHALL BE PROVIDED WITH METAL ESCUTCHEONS THROUGH OUT.
3. SMOKE/FIRE DAMPERS SHALL BE INSTALLED IN CORRIDORS, FIRE BARRIERS AND FIRE PARTITIONS. SEE MECHANICAL PLANS FOR LOCATION OF SMOKE/FIRE DAMPERS.
4. PENETRATIONS OF FIRE RESISTANCE-RATED HORIZONTAL ASSEMBLIES SHALL COMPLY WITH SECTION 713.4. THROUGH PENETRATIONS SHALL COMPLY WITH SECTION 713.4.1.1.1 OR 713.4.1.1.2, OR AS NOTED BELOW:
   A. STEEL, FERROUS OR COPPER CONDUITS MAY PENETRATE A SINGLE FIRE-RESISTANT-RATED FLOOR ASSEMBLY WHEN THE ANNULAR SPACE IS PROTECTED WITH MATERIAL THAT MEETS ASTM E 119 OR UL 263.
   C. PENETRATIONS SHALL BE FIRE-STOPPED BY A SYSTEM INSTALLED AS TESTED IN ACCORDANCE WITH ASTM E 814 OR UL 1479. THE SYSTEM SHALL HAVE AN F RATING AND T RATING OF NOT LESS THAT 1-HR, BUT NOT LESS THAN THE REQUIRED RATING OF THE FLOOR PENETRATED.
   D. MEMBRANE PENETRATIONS BY LISTED ELECTRICAL OUTLET BOXES ARE PERMITTED PROVIDED SUCH BOXES HAVE BEEN TESTED FOR USE IN FIRE-RESISTANT-RATED ASSEMBLIES, AND THE SPACE BETWEEN THE CEILING MEMBRANE AND THE BOX DOES NOT EXCEED 1/8-IN. UNLESS LISTED OTHERWISE.
5. PENETRATIONS IN FIRE-RESISTANCE-RATED WALLS SHALL COMPLY WITH SECTION 713.3. THROUGH PENETRATIONS SHALL COMPLY WITH SECTION 713.3.1.1 OR 713.3.1.2, OR AS NOTED BELOW:
   A. STEEL, FERROUS OR COPPER PIPES MAY PENETRATE FIRE-RESISTANCE-RATED WALLS, PROVIDED THE OPENING IS PROTECTED AS FOLLOWS:
      i. ITEM PENETRATING CONCRETE OR MASONRY WALLS IS A MAXIMUM 6-IN NOMINAL DIAMETER AND THE AREA OF THE OPENING THROUGH THE WALL DOES NOT EXCEED 144SQ. IN., CONCRETE, GROUT OR MORTAR IS PERMITTED WHERE IT IS INSTALLED THE FULL THICKNESS OF THE WALL OR THE THIRCKNESS REQUIRED TO MAINTAIN THE FIRE-RESISTANCE-RATING; OR
      ii. WHEN THE ANNULAR SPACE IS PROTECTED WITH MATERIAL THAT MEETS ASTM E 119 OR UL 263.
   B. PENETRATIONS SHALL BE FIRE-STOPPED BY A SYSTEM INSTALLED AS TESTED IN ACCORDANCE WITH ASTM E 814 OR UL 1479, AND SHALL HAVE AN F RATING OF NOTE LESS THAN THE REQUIRED FIRE-RESISTANCE-RATING OF THE WALL PENETRATED.
   C. MEMBRANE PENETRATIONS OF MAXIMUM TWO-HOUR FIRE-RESISTANCE-RATED WALLS BY STEEL ELECTRICAL BOXES ARE PERMITTED, PROVIDED THAT EACH DOES NOTE EXCEED 165Q. IN. IN AREA AND THE TOTAL AREA OF SUCH OPNENINGS DOES NOT EXCEED 100 SQ. IN. FOR ANY 100 SQ. FT. OF WALL AREA, AND THE SPACE BETWEEN THE WALL MEMBRANE AND THE BOX DOES NOT EXCEED 1/8-IN. ADDITIONALLY, OUTLET BOXES ON OPPOSITE SIDES OF THE WALL SHALL BE SEPERATED BY A HORIZONTAL DISTANCE OF NOT LESS THAN 24-IN.
   D. MEMBRANE PENETRATIONS BY LISTED ELECTRICAL BOXES OF ANY MATERIAL ARE PERMITTED PROVIDED SUCH BOXES HAVE BEEN TESTED FOR USE IN FIRE-RESISTANCE-RATED ASSEMBLIES, AND THE SPACE BETWEEN THE WALL MEMBRANE AND THE BOX DOES NOT EXCEED 1/8-IN. UNLESS LISTED OTHERWISE. ADDITIONALLY, OUTLET BOXES ON OPPOSITE SIDES OF THE WALL SHALL BE SEPERATED BY THE HORIZONTAL DISTANCE SPECIFIED IN THE LISTING OF THE BOXES.
6. EVERY ROOM OR SPACE THAT IS AN ASSEMBLY OCCUPANCY SHALL HAVE THE OCCUPANT LOAD OF THE ROOM OR SPACE POSTED IN A CONSPICUOUS PLACE, NEAR THE MAIN EXIT OR EXIT ACCESS DOORWAY. POSTED SIGNS SHALL BE OF AN APPROVED LEGIBLE PERMANENT DESIGN AND SHALL BE MAINTANED BY THE OWNER OR AUTHORIZED AGENT.

NOTE:
1. ALL STUD WALL, INTERIOR SIDE ONLY, SHALL BE PLAINED OR SHIMMED AS REQUIRED PRIOR TO DRYWALL INSTALLATION TO ASSURE A LEVEL SURFACE WITHOUT DIPS AND BOWS. DRYWALL SUBCONTRACTOR SHALL INSPECT AND APPROVE FRAMED PARTITIONS PRIOR TO INSTALLING DRYWALL WITH THE UNDERSTANDING THAT A LEVEL 5 FINISH IS REQUIRED. ALL DIPS AND BOWS OCCURRING AFTER DRYWALL IS INSTALLED, WILL BE REPAIRED AT THE CONTRACTOR'S OWN EXPENSE.
2. MAXIMUM CROSS SLOPE FOR WALKWAYS, HC DROP OFF AND RAMPS NOT EXCEED MORE THAN 2%.

FIRE DEPARTMENT GENERAL NOTES

1. PROVIDE APPROVED PANIC HARDWARE ON REQUIRED EXIT DOORS. TITLE 24, SECTION 1008.1.10.
2. THE INSPECTION, HYDROSTATIC TEST AND FLUSHING OF THE UNDERGROUND FIRE PROTECTION PIPING SHALL BE WITNESSED BY AN AUTHORIZED FIRE DEPARTMENT REPRESENTATIVE. NO UNDERGROUND PIPING OR THRUST BLOCKS SHALL BE COVERED BY EARTH OR HIDDEN FROM VIEW UNTIL THE FIRE DEPARTMENT REPRESENTATIVE HAS BEEN NOTIFIED AND GIVEN NOT LESS THAN 48 HOURS IN WHICH TO INSPECT SUCH INSTALLATIONS. FIRE CODE 901.5, COUNTY OF LOS ANGELES FIRE DEPARTMENT REGULATION 7.
3. ELEVATORS, ESCALATORS AND MOVING WALKS SHALL COMPLY WITH THE REQUIREMENTS SET FORTH IN BUILDING CODE CHAPTER 30.
4. WALLS AND SOFFITS WITHIN ENCLOSED USABLE SPACES UNDER ENCLOSED AND UNENCLOSED STAIRWAYS SHALL BE PROTECTED BY 1-HOUR FIRE-RESISTANCE-RATED CONSTRUCTION OF THE FIRE-RESISTANCE RATING OF THE STAIRWAY ENCLOSURE, WHICHEVER IS GREATER. BUILDING CODE 1009.6.3.
5. PORTABLE FIRE EXTINGUISHERS SHALL BE INSTALLED IN LOCATIONS AS REQUIRED BY FIRE CODE 906.
6. PROVIDE AN APPROVED FIRE ALARM SYSTEM PER TITLE 24, FIRE CODE 907.2.3.
7. THE FIRE SPRINKLER SYSTEM SHALL BE CALCULATED PER PAMPHLET #13.
8. A MANUAL FIRE ALARM SYSTEM SHALL BE INSTALLED IN GROUP A OCCUPANCIES HAVING AN OCCUPANT LOAD OF 300 OR MORE. BUILDING COD 907.2.1. SUBMIT PLANS TO THE FIRE ALARM PLAN CHECK UNIT FOR REVIEW AND APPROVAL PRIOR TO INSTALLATION. FIRE CODE 907.2.1.

CA GREEN CODE NOTES

1. EXTERIOR ENTRIES AND/OR OPENINGS SUBJECT TO FOOT TRAFFIC OR WIND-DRIVEN RAIN TO PREVENT WATER INTRUSION IN BUILDINGS. (CAL GREEN 5.407.2.2)
2. COMPOSITE WOOD PRODUCTS (HARDWOOD PLYWOOD, PARTICLE BOARD, AND MDF COMPOSITE WOOD) INSTALLED ON THE INTERIOR OR EXTERIOR OF THE BUILDING SHALL MEET OR EXCEED THE STANDARDS OUTLINED IN TABLE 5.504.4.5. (CAL GREEN 5.504.4.5)
3. THIS BUILDING IS EQUIPED WITH WATER-CONSERVING FIXTURES MEETING THE CRITERIA ESTABLISHED IN SECTION CAL GREEN 5.303.2 OR 5.303.3. SEE PLUMBING PLANS FOR MORE INFORMATION.
4. PROVIDE DOCUMENTATION TO JUSTIFY THAT MATERIALS USED HAVE A POST-CONSUMER OR PRE-CONSUMER RECYCLED CONTENT VALUE (RCV) OF AT LEAST 10% OF THE TOTAL VALUE, BASED ON ESTIMATED COST OF MATERIALS ON THE PROJECT. (A5.405.4)
5. PROVIDE THERMAL INSULATION THAT COMPLIES WITH THE VOC EMISSION LIMITS DEFINED IN THE CHPS LOW-EMITTING MATERIALS LIST. (A5.504.4.8)
6. THE USE AND INSTALLATION OF WATER SOFTENERS THAT DISCHARGE TO THE COMMUNITY SEWER SYSTEM SHALL BE LIMITED OR PROHIBITED BY LOCAL AGENCIES IF CERTAIN CONDITIONS ARE MET. (CA GREEN A5.303.3.5)
7. COMPARED TO OTHER PRODUCTS IN A GIVEN PRODUCT CATEGORY, SELECT BUILDING MATERIALS OR PRODUCTS PERMANENT INSTALLATION ON THE PROJECT THAT HAVE BEEN HARVESTED OR MANUFACTURED IN CALIFORNIA OR WITHIN 500 MILES OF THE PROJECT SITE.
   A. FOR THOSE MATERIALS LOCALLY MANUFACTURED, SELECT MATERIALS MANUFACTURED USING LOW EMBODIED ENERGY OR THOSE THAT WILL RESULT IN NET ENERGY SAVINGS OVER THEIR USEFUL LIFE.
   B. REGIONAL MATERIALS SHALL MAKE UP AT LEAST 10 PERCENT, BASED ON COST, OF TOTAL MATERIALS VALUE.
   C. IF REGIONAL MATERIAL MAKE UP ONLY PART OF A PRODUCT, THEIR VALUES ARE CALCULATED AS PERCENTAGES BASED ON WEIGHT.
   D. PROVIDE DOCUMENTATION OF THE ORIGIN, NET PROJECTED ENERGY SAVINGS AND VALUE OF REGIONAL MATERIALS.
   (CA GREEN A5.405.1)
8. OBTAIN APPROVAL FROM THE MECHANICAL SECTION FOR COMPLIANCE WITH SECTION 5.303 - INDOOR WATER USE.
9. INTERIOR WALL AND FLOOR-CEILING ASSEMBLIES SEPARATING ADJACENT TENANT SPACES AND TENANT AND PUBLIC PLACES SHALL HAVE AN STC OF AT LEAST 40. (5.507.4.3)
10. PROVIDE APPROVAL FROM MECHANICAL SECTION FOR A 30% REDUCTION IN INDOOR POTABLE WATER USEAGE. (A5.303.2.3.1)

SYMBOLS LEGEND

- X" — FINISH FLOOR ELEVATION CHANGE
- F.E. — SEMI-RECESSED FIRE EXTINGUISHERS SEE SPECIFICATIONS AND DETAIL 7/D5.0 8/D5.0
- 300A — DOOR NUMBER DOOR KEY SEE DOOR SCHEDULE A10.0
- X — WINDOW KEY SEE WINDOW SCHEDULE A10.1 WINDOW TYPE

WALL LEGEND

EXTERIOR WALLS 2 HOUR FIRE RATED

1. FURRING WALL @ CMU WALL-5/8" TYPE 'X' GYP ONE SIDE, EXTERIOR PLASTER TROWL APPLIED. SEE DETAIL 1/D2.0 AND STRUCT'L DETAIL — EXT. SIDE
2. 2-HR EXTERIOR STUCCO WALL WITH R-19 INSULATION, EXTERIOR PLYWOOD, FIBERGLASS MAT GYP SHEATHING, EXTERIOR PLASTER TROWEL APPLIED, STRUCTURAL PLYWOOD, 2-LAYER GYP. BD INTERIOR SIDE; SEE DETAIL 4A/D2.0 5A/D2.0 AND STRUCT'L DETAIL — EXT. SIDE
3. 2-HR EXTERIOR STUCCO WALL WITH R-19 INSULATION, EXTERIOR PLYWOOD, FIBERGLASS MAT GYP SHEATHING, EXTERIOR PLASTER TROWEL APPLIED, 2-LAYER GYP. BD INTERIOR SIDE; SEE DETAIL 4/D2.0 5/D2.0 AND STRUCT'L DETAIL — EXT. SIDE
3A. SAME AS 3 EXCEPT WITH CERAMIC TILE INTERIOR SIDE. — EXT. SIDE 6/D2.0
4. 2-HR EXTERIOR STUCCO WALL @ NORTH CANOPY, SEE DETAIL 3/D2.0

INTERIOR WALLS 1 HOUR FIRE RATED PARTITIONS

6. 1-HR FIRE-RATED PARTITION/DEMISING SHEAR WALL WITH PLYWOOD ONE (CORRIDOR) SIDE. SEE DETAIL 8/D2.0 AND SEE STRUCT'L
6A. 1-HR FIRE-RATED PARTITION AT CORRIDOR WITH STRUCT. PLYWOOD AND 5/8" TYPE "X" GYP. BD. ONE SIDE (CORRIDOR) AND 5/8" WATER RESISTANT GYP. BD. ON RESTROOM/JANITOR SIDE, SEE DETAIL 8A/D2.0
6B. 1-HR FIRE-RATED PARTITION/DEMISING SHEAR WALL WITH PLYWOOD BOTH SIDES. SEE DETAIL 8B/D2.0 AND SEE STRUCT'L
7. 1-HR FIRE-RATED SHAFT WALL, SEE DETAIL 9/D2.0 AND STRUCTURAL

INTERIOR WALLS NON-RATED PARTITIONS

9. WOOD STUD DOUBLE PLUMBING WALL 5/8" TYPE X WATER RESISTANT GREEN GYP BD. EXPOSED SIDE, WITH SOUND INSULATION, SEE DETAIL 11/D2.0
10. STUD WALL AT WET AREA WITH 5/8" WATER RESISTANT GYP. BD. ON EXPOSED SIDE ONLY. SEE DET. 1/D3.0
10A. STUD WALL AT WET AREA WOOD STUD WALL FULL HEIGHT AND SOUND INSULATION WITH 5/8" WATER RESISTANT GYP. BD. BOTHE SIDES. SEE DETAIL 1A/D3.0
11. WOOD STUD WALL FULL HEIGHT WITH 5/8" GYP. BOARD BOTH SIDES WITH SOUND INSULATION. 10/D2.0

CONSTRUCTION PLAN NOTES

1. PROVIDE PRESSURE TREATED FLOOR SILL PLATE ON ALL BATHROOM WALLS, JANITOR'S CLOSET WALLS AND EXTERIOR PERIMETER WALLS ON GROUND FLOOR.
2. PROVIDE 3/4" FIRE TREATED PLYWOOD ON ALL WALLS IN MDF ROOM.
3. 1011.4 RAISED CHARACTER AND BRAILLE EXIT SIGNS. TACTILE EXIT SIGNS SHALL BE REQUIRED AT THE FOLLOWING LOCATIONS:
   1. EACH GRADE-LEVEL EXTERIOR EXIT DOOR THAT IS REQUIRED TO COMPLY WITH SECTION 1011.1, SHALL BE IDENTIFIED BY A TACTILE EXIT SIGN WITH THE WORD, "EXIT"
   2. EACH EXIT DOOR THAT IS REQUIRED TO COMPLY WITH SECTION 1011.1, AND THAT LEADS DIRECTLY TO A GRADE-LEVEL EXTERIOR EXIT BY MEANS OF A STAIRWAY OR RAMP SHALL BE IDENTIFIED BY A TACTILE EXIT SIGN WITH THE FOLLOWING WORDS AS APPROPRIATE:
      2.1. "EXIT STAIR DOWN"
      2.2. "EXIT RAMP DOWN"
      2.3. "EXIT STAIR UP"
      2.4. "EXIT RAMP UP"
   3. EACH EXIT DOOR THAT IS REQUIRED TO COMPLY WITH SECTION 1011.1, AND THAT LEADS DIRECTLY TO A GRADE-LEVEL EXTERIOR EXIT BY MEANS OF AN EXIT ENCLOSURE OR AN EXIT PASSAGEWAY SHALL BE IDENTIFIED BY A TACTILE EXIT SIGN WITH THE WORDS, "EXIT ROUTE."
   4. EACH EXIT ACCESS DOOR FROM AN INTERIOR ROOM OR AREA TO A CORRIDOR OR HALLWAY THAT IS REQUIRED TO COMPLY WITH SECTION 1011.1, SHALL BE IDENTIFIED BY A TACTILE EXIT SIGN WITH THE WORDS "EXIT ROUTE."
   5. EACH EXIT DOOR THROUGH A HORIZONTAL EXIT THAT IS REQUIRED TO COMPLY WITH SECTION 1011.1, SHALL BE IDENTIFIED BY A SIGN WITH THE WORDS, "TO EXIT" RAISED CHARACTER AND BRAILLE EXIT SIGNS SHALL COMPLY WITH SECTION 11178.5.1 ITEM 1 SECTIONS 11B-703.1, 11B-703.2, 11B-703.3 AND 11B-703.5.
4. PROVIDE TACTILE STAIR LEVEL IDENTIFICATION SIGN THAT COMPLIES WITH 1022.9, AT EACH FLOOR LEVEL LANDING.
5. PROVIDE FIRE RATED MOTORIZED ROLL-UP DOOR W/ FUSIBLE LINK. SEE DOOR SCHEDULE.
6. ROOF DRAINS. FOR ROOF DRAINS/OVERFLOW DRAINS EXITING THE BUILDING, SEE DETAIL #5/D5.0.
7. PROPOSED LOCATION FOR FIRE SPRINKLER RISER/VALVE. PROVIDE ACCESS PANEL AS REQUIRED.
8. 6"X6" STEEL COLUMN WITH CLEAR FINISH
9. INTERIOR HYDRO-STATION DRINKING FOUNTAIN, SEE PLUMBING PLAN FOR ADDITIONAL INFORMATION
10. DRINKING FOUNTAIN ALCOVE. ALCOVE CEILING HEIGHT @ 7'-0" AFF. SEE DTL 5/A8.0. INSTALL CERAMIC TILES 4'-0" A.F.F. AT ALL WALLS OF ALCOVE.
11. PROVIDE WATER RESISTANT GYP ON JAN. CLOSET SIDE.
12. ALL RESTROOM FLOOR TO HAVE A 1/8" SLOPE TO FLOOR DRAIN. SEE PLUMBING ENG. DWGS. FOR FLOOR DRAIN LOCATIONS.
13. INSTALL SMOKE GUARD. SEE DETAIL 9/D5.0.
14. FOLDING WALL: HUFCOR ELECTRIC CONTINUOUSLY-HINGED PANEL, SEE D7.0
15. PROVIDE DOOR BUZZER AND COMMUNICATION DEVICE WITH CONDUIT TO MAIN GATE ENTRANCE
16. SHAFT TO HAVE A 1-HR FIRE RATING. INSTALL (2) LAYERS OF 5/8" TYPE "X" GYP. BD. TO EXPOSED SIDE OF FRAMING. INSTALL TYPE "X" WATER RESISTANT GYP. BD. AT RESTROOM/JANITOR CLOSET SIDE. PROVIDE FIRE-RATED DAMPERS WHERE DUCTS PENETRATE THE FIRE-RATED WALLS. USE 1" TYPE S DRYWALL SCREWS 8" O.C. TO VERTICAL EDGES. SEE GA FILE NO. WP 1200.
17. FLOOR DRAIN, SEE PLUMBING PLAN
18. 45 MIN. GLAZING/DOOR

FRANCO ARCHITECTS INC.
12345 Ventura Blvd. H
Studio City, CA 91604
Tel 818 754-2030
Fax 818 754-2032
Architecture and Planning

MAGNOLIA SCIENCE ACADEMY

18220 SHERMAN WAY, RESEDA, CA91335

REV	DESCRIPTION	DATE
	PLAN CHECK #1	6/14/2017

LICENSED ARCHITECT
JOHANN D. WANG
C27010
4/30/2019
RENEWAL DATE
STATE OF CALIFORNIA

PROJECT
MAGNOLIA SCIENCE ACADEMY

PROJECT ADDRESS
18220 SHERMAN WAY, RESEDA, CA91335

DRAWING TITLE
FIRST FLOOR CONSTRUCTION PLAN

DRAWN BY
ISSUE DATE 6/14/2017
JOB NUMBER
DRAWING SCALE AS NOTED
APPROVED BY:

DRAWING NUMBER
A1.1

FIRST REFLECTED CEILING PLAN

SCALE: 1/8" = 1'-0"

GENERAL NOTES

1. REFER TO ENGINEERED DWGS FOR CIRCUITING & EXACT FIXTURE OUTLET & SPECS. ALL LIGHT SWITCHES TO BE CIRCUITED & INSTALLED TO COMPLY WITH LOCAL CODES, A.D.A. TITLE 24 & APPLICABLE STATE ENERGY REQ'MTS.
2. SPECIFICATIONS & ILLUSTRATIONS OF MECHANICAL & ELECTRICAL DEVICES SPECIFIED BY THE MECHANICAL AND ELECTRICAL ENGINEERS SHALL BE SUBMITTED TO FRANCO & ASSOCIATES FOR APPROVAL STAMP PRIOR TO PURCHASE.
3. MECHANICAL & ELECTRICAL ENGINEERED DWGS ARE NOT INTENDED TO SHOW EXACT LOCATIONS OF FIXTURES, OUTLETS, OR EQUIPMENT: REFER TO ARCHITECTURAL DWGS.
4. LIGHT FIXTURES SHALL BE LOCATED EXACTLY AS NOTED. CONTRACTOR SHALL FIELD CHECK ELECTRICIAN'S LAYOUT OF LIGHT FIXTURES PRIOR TO FINAL CONNECTIONS.
5. ALL DUCTWORK, DIFFUSERS, EXHAUST FANS & OTHER MECHANICAL DEVICES AND EQUIPMENT ABOVE OR PENETRATING THE CLG. SHALL BE LOCATED IN COORDINATION WITH THE LIGHT FIXTURE LAYOUT.
6. CONTRACTOR SHALL INCLUDE ACCESS PANELS IN BID. MECH. & ELECT. SUBS SHALL ESTIMATE QUANTITY REQ'D BASED ON DRYWALL CLG. LOCATIONS ON PLANS. ALL ACCESS PANELS SHALL BE FRAMELESS W/CONCEALED HINGES.
7. CONTRACTOR'S SUPER SHALL SCHEDULE A JOB SITE MEETING WITH BOTH BLDG. & FIRE INSPECTORS FOR PRELIMINARY APPROVAL OF ALL MECH. & ELECT. PANELS, LIFE SAFETY SPEAKER, STROBE & SMOKE DETECTOR LOCATIONS TWO (2) DAYS PRIOR TO ROUGH-OUT INSTALL. ADVISE ARCHITECT OF ANY ADDITIONS OR RELOCATIONS REQUIRED BY INSPECTORS PRIOR TO PROCEEDING WITH WORK.
8. WHERE CEILINGS ARE SPECIFIED TO BE FIRE-RATED CONSTRUCTION, ALL RECESSED LIGHT FIXTURES & SPEAKERS SHALL BE BOXED OUT ABOVE THE CEILING WITH FIRE-RATED ENCLOSURE EQUAL TO THE RATING OF THE CEILING.
9. PROVIDE SEISMIC CEILING GRID BRACING AS REQUIRED BY LOCAL CODES.
10. SWITCHES & MOTION SENSORS (IF ANY) SHALL BE INSTALLED AT 42" A.F.F. TO CENTER AND AT 6" OFF DOOR JAMBS OR SIDELIGHTS, U.O.N.
11. ANY TIME THE BUILDING OR A PORTION OF THE BUILDING IS OCCUPIED, THE MEANS OF EGRESS SERVING THE OCCUPIED PORTION SHALL BE ILLUMINATED AT AN INTENSITY OF NOT LESS THAN 1-FOOT-CANDLE (11 LUX) AT THE WALKING SURFACE LEVEL.
12. THE POWER SUPPLY FOR THE MEANS OF EGRESS ILLUMINATION SHALL BE PROVIDED BY THE PREMISE'S ELECTRICAL SUPPLY. IN THE EVENT OF POWER SUPPLY FAILURE, ILLUMINATION SHALL BE AUTOMATICALLY PROVIDED FROM AN EMERGENCY SYSTEM FOR THE FOLLOWING AREAS:
    a. AISLES AND UNENCLOSED EGRESS STAIRWAYS IN ROOMS AND SPACES THAT REQUIRE TWO OR MORE MEANS OF EGRESS.
    b. CORRIDORS, EXIT ENCLOSURES AND EXIT PASSAGEWAYS IN BUILDINGS REQUIRED TO HAVE TWO OR MORE EXITS.
    c. EXTERIOR EGRESS COMPONENTS AT OTHER THAN THE LEVEL OF EXIT DISCHARGE UNTIL EXIT DISCHARGE IS ACCOMPLISHED FOR BUILDINGS TO HAVE TWO OR MORE EXITS.
    d. INTERIOR EXIT DISCHARGE ELEMENTS, AS PERMITTED IN SECTION 1027.1, IN BUILDINGS REQUIRED TO HAVE TWO OR MORE EXITS.
    e. EXTERIOR LANDINGS, AS REQUIRED BY SECTION 1008.1.6, FOR EXIT DISCHARGE DOORWAYS IN BUILDING REQUIRED TO HAVE TWO OR MORE EXITS.
13. EXIT SIGNS SHALL BE INTERNALLY OR EXTERNALLY ILLUMINATED WHEN THE FACE OF AN EXIT SIGN IS ILLUMINATED FROM AN EXTERNAL SOURCE, IT SHALL HAVE AN INTENSITY OF NOT LESS THAN 5-FOOT CANDLE FROM EITHER OF THE TWO ELECTRIC LAMPS. INTERNALLY ILLUMINATED SIGNS SHALL PROVIDE EQUIVALENT LUMINANCE AND BE LISTED FOR THE PURPOSE.
14. PLENUM RATED WIRING TO BE PROVIDED. SEE ELECTRICAL PLANS.
15. PROVIDE EXIT SIGNS AND DIRECTIONAL EXIT SIGNS WITH MINIMUM 6" HIGH BY 3/4" STROKE BLOCK LETTER ON A CONTRASTING BACKGROUND. SPACING BETWEEN SIGNS SHALL NOT EXCEED 100 FEET.
16. UNDERSIDE OF EXIT SIGNS MUST BE 7'-0" CLEAR.
17. THE EXIT SIGNS SHALL BE CONNECTED TO AN EMERGENCY ELECTRICAL SYSTEM WHICH IS TO PROVIDE CONTINUED ILLUMINATION FOR A DURATION OF NOT LESS THAN 1-1/2 HOUR IN CASE OF PRIMARY POWER LOSS. CONTINUED ILLUMINATION IS TO BE PROVIDED FROM STORAGE BATTERIES, UNIT EQUIPMENT, OR AN ON-SITE GENERATOR AND THE INSTALLATION OF THE EMERGENCY POWER SYSTEM SHALL BE INSTALLED IN ACCORDANCE WITH CHAPTER 27.
18. EMERGENCY LIGHTING FACILITIES SHALL BE ARRANGED TO PROVIDE INITIAL ILLUMINATION THAT IS AT LEAST AN AVERAGE ON 1-FOOT-CANDLE (11 LUX) AN A MINIMUM AT ANY POINT OF 0.1-FOOT-CANDLE (1 LUX) MEASURED ALONG THE PATH OF EGRESS AT FLOOR LEVEL. A MAXIMUM-TO-MINIMUM ILLUMINATION UNIFORMITY RATIO OF 40 TO 1 SHALL NOT BE EXCEEDED.
19. INTERNALLY ILLUMINATED SIGNS SHALL BE LISTED AND LABELED AND SHALL BE INSTALLED IN ACCORDANCE WITH THE MANUFACTURER'S INSTRUCTIONS AND SECTION 2702.
20. EXIT SIGNS SHALL BE ILLUMINATED AT ALL TIMES.
21. EGRESS DOORS SHALL BE READILY OPENABLE FROM THE EGRESS SIDE WITHOUT THE USE OF A KEY OR SPECIAL KNOWLEDGE OR EFFORT. SEE 1008.1.9.5 FOR EXCEPTIONS.
22. DOOR HANDLES LOCK AND OTHER OPERATNG DEVICES SHALL BE INSTALLED AT A MIN. 34" AND MAX. 48" ABOVE THE FINISHED FLOOR.
23. EXIT DOORS SHALL REMAIN UNLOCKED WHEN BUILDING IS OCCUPIED.
24. ALL EGRESS DOOR OPERATION SHALL ALSO COMPLY WITH SECTION 1008.1.9 – 1008.1.9.8
25. THE MEANS OF EGRESS, INCLUDING THE EXIT DISCHARGE, SHALL BE ILLUMINATED AT ALL TIMES THE BUILDING SPACE SERVED BY THE MEANS OF EGRESS IS OCCUPIED.
26. THE MEANS OF EGRESS ILLUMINATION LEVEL SHALL NOT BE LESS THAN 1 FOOT-CANDLE AT THE WALKING SURFACE.
27. THE EMERGENCY POWER SYSTEM SHALL PROVIDE POWER FOR A DURATION OF NOT LESS THAN 90 MINUTES AND SHALL CONSIST OF STORAGE BATTERIES, UNIT EQUIPMENT OR AN ON-SITE GENERATOR. THE INSTALLATION OF THE EMERGENCY POWER SYSTEM SHALL BE IN ACCORDANCE WITH SECTION 2702.
28. ALL REQUIRED EXITS SHALL BE MAINTAINED UNTIL ARRIVAL AT GRADE OR THE PUBLIC WAY. (1021.1)
29. THE EXIT PASSAGEWAY MAY ONLY BE USED AS A MEANS OF EGRESS PROVIDE A 1-HOUR FIRE-RESISTANCE RATING OR OF THE SAME RATING REQUIRED FOR ANY CONNECTING EXIT ENCLOSURE. WALLS, FLOORS AND CEILINGS SHALL BE CONSTRUCTED AS FIRE BARRIERS IN ACCORDANCE WITH SECTION 707 (1023.1 & 1023.3)
30. EXIT SIGNS ILLUMINATED BY AN EXTERNAL SOURCE SHALL HAVE AN INTENSITY OF NOT LESS THAN 5 FOOT CANDLES (54 IUX).
31. INTERNALLY ILLUMINATED SIGNS SHALL BE LISTED AND LABELED AND SHALL BE INSTALLED IN ACCORDANCE WITH THE MANUFACTURER INSTRUCTIONS AND SECTION 2702.
32. EXIT SIGNS SHALL BE ILLUMINATED AT ALL TIMES. (1011.3)
33. EXIT SIGNS SHALL BE CONNECTED TO AN EMERGENCY POWER SYSTEM THAT WILL PROVIDE AN ILLUMINATION OF NOT LESS THAN 90 MIN. IN CASE OF PRIMARY POWER LOSS (1011.6.3)
34. EGRESS DOORS SHALL BE READILY OPENABLE FROM THE EGRESS SIDE WITHOUT THE USE OF A KEY OR SPECIAL KNOWLEDGE OR EFFORT. SEE 1008.1.9 FOR EXCEPTIONS.
35. DOOR HANDLES, LOCK AND OTHER OPERATING DEVICES SHALL BE INSTALLED AT A MIN. 34" AND A MAX. 48" ABOVE THE FINISHED FLOOR.
36. THIS DOOR TO REMAIN UNLOCKED WHEN BUILDING IS OCCUPIED.
37. ALL EGRESS DOOR OPERATION SHALL ALSO COMPLY WITH SECTION 1008.1.9 – 1008.1.9.12
38. THE MEANS OF EGRESS, INCLUDING THE EXIT DISCHARGE, SHALL BE ILLUMINATED AT ALL TIMES THE BUILDING SPACE SERVED BY THE MEANS OF EGRESS IS OCCUPIED.
39. THE MEANS OF EGRESS ILLUMINATION LEVEL SHALL NOT BE LESS THAN 1 FOOT-CANDLE AT THE WALKING SURFACE
40. THE POWER SUPPLY FOR MEANS OF EGRESS ILLUMINATION SHALL NORMALLY BE PROVIDED BY THE PREMISES' ELECTRICAL SUPPLY. IN THE EVENT OF POWER SUPPLY FAILURE, AN EMERGENCY ELECTRICAL SYSTEM SHALL AUTOMATICALLY ILLUMINATE THE FOLLOWING AREAS:;
    a. AISLES AND UNENCLOSED EGRESS STAIRWAYS IN ROOMS AND SPACES THAT REQUIRE TWO OR MORE MEANS OF EGRESS
    b. CORRIDORS, EXIT ENCLOSURES AND EXIT PASSAGEWAYS IN BUILDINGS REQUIRED TO HAVE TWO OR MORE EXITS.;
    c. EXTERIOR EGRESS COMPONENTS AT OTHER THAN THE LEVEL OF EXIT DISCHARGE UNTIL EXIT DISCHARGE IS ACCOMPLISHED FOR BUILDINGS REQUIRED TO HAVE TWO OR MORE EXITS.
    d. INTERIOR EXIT DISCHARGE ELEMENTS, AS PERMITTED IN SECTION 1027.1, IN BUILDINGS REQUIRED TO HAVE TWO OR MORE EXITS.
    e. EXTERIOR LANDINGS, AS REQUIRED BY SECTION 1008.1.6, FOR EXIT DISCHARGE DOORWAYS IN BUILDINGS REQUIRED REQUIRED TO HAVE TWO OR MORE EXITS.
41. THE EMERGENCY POWER SYSTEM SHALL PROVIDE POWER FOR A DURATION OF NOT LESS THAN 90 MINUTES AND SHALL CONSIST OF STORAGE BATTERIES, UNIT EQUIPMENT OR AN ON-SITE GENERATOR. THE INSTALLATION OF THE EMERGENCY POWER SYSTEM SHALL BE IN ACCORDANCE WITH SECTION 2702.
42. EMERGENCY LIGHTING FACILITIES SHALL BE ARRANGED TO PROVIDE INITIAL ILLUMINATION THAT IS AT LEAST AN A AVERAGE OF 1 FOOT-CANDLE (11 LUX) AND A MINIMUM AT ANY POINT OF 0.1 FOOT-CANDLE (1 LUX) MEASURED ALONG THE PATH OF EGRESS AT FLOOR LEVEL. ILLUMINATION LEVELS SHALL BE PERMITTED TO DECLINE TO 0.6 FOOT-CANDLE (6 LUX) AVERAGE AND A MINIMUM AT ANY POINT OF 0.06 FOOT-CANDLE (0.6 LUX) AT THE END OF THE EMERGENCY LIGHTING TIME DURATION. A MAXIMUM-TOMINIMUM ILLUMINATION UNIFORMITY RATIO OF 40 TO 1 SHALL NOT BE EXCEEDED.
43. EXIT SIGNS SHALL BE INTERNALLY OR EXTERNALLY ILLUMINATED

LEGEND

NEW 2'x4' GRID SEE DETAILS (1/D4.0) (2/D4.0) (3/D4.0) (4/D4.0) (5/D4.0)
TILES:
ARMSTRONG FINE FISSURED HIGH NRC/CAC- #1755

NEW GYP. BD. SOFFIT OR CEILING
REFER TO PLAN FOR CEILING HEIGHTS. SEE DET. (6/D4.0)

(X'-X") FINISH CEILING HEIGHT (EX.) EXISTING PLASTER CLG. (VIF.)

EXHAUST DUCT, REFER TO MECHANICAL DWGS.
RETURN DUCT, REFER TO MECHANICAL DWGS.
SUPPLY DUCT, REFER TO MECHANICAL DWGS.

FIXTURE SYMBOLS

L — ISOLIT ELT SERIES CLEAR W/ WHITE TRIM & GREEN LETTERS EXIT LIGHT PER ELEC. PLANS COMPLIANCE WITH BLDG. CODE SEC. 1003.2.8.1. SURFACE MTD.; (L) SELF-ILLUMINATED LOW LEVEL EXIT SIGN PROVIDED CONJUNCTION WITH EXIT SIGNAGE PACKAGE (WHERE SHOWN)

INTERNALLY ILLUMINATED FLOOR LEVEL EXIT SIGN PROVIDED IN ALL INTERIOR CORRIDORS (1011.6)

A — 2'x4' RECESSED LED LIGHT FIXTURE; BY COOPER LIGHTING EATON
24AC-LD4-44-UNV-L840

B — 13"x4' SURFACE MOUNTED LED LIGHT FIXTURE; BY LAMAR LIGHTING
VGAL SERIES- 48-L-40

C — 6-INCH RECESSED LED FIXTURE; BY COOPER LIGHTING EATON
HALO COMMERCIAL- PD6-30-D010-PDM6A-835-61V-C

D — 8"x4' SURFACE MOUNTED LED LIGHT FIXTURE; BY COOPER LIGHTING EATON
4-LED4-40SL-F-UNV-L835-CD-1-U

E-X — 4"x8' SURFACE MOUNT LED LIGHT FIXTURE; BY FOCAL POINT
SEEM 4 LED: FSM4LS-FL-625LF-1C-UNV-LD1-SM-WH-8'

4"x4' SURFACE MOUNT LED LIGHT FIXTURE; BY FOCAL POINT
SEEM 4 LED: FSM4LS-FL-625LF-1C-UNV-LD1-SM-WH-4'

F-X — 2'- SURFACE MOUTED LED LIGHT FIXTURE; BY FORUM
SAD-34-30-SAT-S-2-120V-WH
4'- SURFACE MOUTED LED LIGHT FIXTURE; BY FORUM
SAD-34-30-SAT-S-4'-120V-WH

H-4' — 7"x4' WALL MOUNT LED LIGHT FIXTURE; BY FOCAL POINT
VERVE IV LED- FV4LW-FL-625LF-1C-UNV-LD1-WM-WH-4'

EXT A — LED WALL MOUNTED LIGHT; BY SHARPER LIGHTING
674-WP SERIES- 674-31"-WP-L3/830- ALP

EXT B — LED SURFACE MOUNTED LIGHT; BY PRESCOLITE
AEW8093-L14.3W-PT22-120-277V-40K

EXT C — 6-INCH RECESSED LED FIXTURE; BY COOPER LIGHTING EATON
HALO COMMERCIAL- PD6-30-D010-PDM6A-835-61V-C

EXT D — LED RECESSED STEP LIGHT; BY LBL LIGHTING
BL94405- WH-LED930-W

EXT E — EXTERIOR POLE MOUNTED FIXTURE WITH 1-HEAD; BY DECO LIGHTING
D824-LED-30/28W-50-UNV-LP-T5-PM-SL
EXTERIOR POLE FOR FIXTURE WITH 1-HEAD; BY DECO LIGHTING
DP4S-S-12-DM1-SLV

EXT F — LED WALL MOUNTED LIGHT; BY WAC LIGHTING
WP-LED335-50-WT

REFLECTED CEILING PLAN NOTES

1. (2) LAYERS OF 5/8" GYP. BD. APPLIED TO UNDERSIDE OF FRAMING. 1 HOUR FIRE RATING REF. GA FILE NO. FC 5513 AT 1ST FLOOR AND FC 5407 AT ROOF. PAINT EXPOSED GYP. BD. FACE WHICH IS ATTACHED TO THE UNDERSIDE OF FRAMING ABOVE. SEE SHEET "A1.5" FOR PAINT COLOR.
2. DRYWALL SOFFIT AT +8'-0" AFF. WITH RECESSED ROLL-DOWN DOOR. SEE DETAIL (1/D5.0)
3. NOT USED
4. PROVIDE GYP. BD. SOFFIT AT 10'-0"AFF. SEE SHEET "A1.5" FOR PAINT COLOR.
5. GYP. CLG.
6. STUCCO CANOPY SOFFIT
6A. METAL PANEL, SEE SECTION 1/A5.4
7. DRINKING FOUNTAIN ALCOVE. ALCOVE TO HAVE A SUSPENDED GYP. BD. CEILING AT 7'-0" AFF. SEE DETAIL (5/A8.0)
8. EXPOSED, NO CEILING

FIRE DEPARTMENT GENERAL NOTES

1. THE MEANS OF EGRESS, AND EXIT DISCHARGE, SHALL BE ILLUMINATED AT ANY TIME THE BUILDING IS OCCUPIED WITH A LIGHT INTENSITY OF NOT LESS THAN 1 FOOT-CANDLE AT THE WALKING SURFACE LEVEL. BUILDING CODE 1006.2.
2. EXITS, EXIT ACCESS DOORS AND PATHS OF EGRESS TRAVEL THAT IS NOT IMMEDIATELY VISIBLE TO THE OCCUPANTS SHALL BE MARKED BY AN APPROVED EXIT SIGN THAT IS READILY VISIBLE FROM ANY DIRECTION OF EGRESS TRAVEL. EXIT SIGNS SHALL BE INTERNALLY OR EXTERNALLY ILLUMINATED. BUILDING CODE 1011.
   NOTE: ADDITIONAL EXIT SIGNS MAY BE REQUIRED AT TIME OF FIELD INSPECTION.
3. PROVIDE LOW-LEVEL EXIT SIGNS PER TITLE 24, 1011.6.
4. EVERY ROOM OR SPACE THAT IS AN ASSEMBLY OCCUPANCY SHALL HAVE THE OCCUPANT LOAD OF THE ROOM OR SPACE POSTED IN A CONSPICUOUS PLACE, NEAR THE MAIN EXIT OR EXIT ACCESS DOORWAY FROM THE ROOM OR SPACE. POSTED SIGNS SHALL BE OF AN APPROVED LEGIBLE PERMANENT DESIGN AND SHALL BE MAINTAINED BY THE OWNER OR AUTHORIZED AGENT. BUILDING CODE 1004.3. FIRE CODE 1004.3.
5. WHERE EXIT SIGNS ARE REQUIRED, ADDITIONAL APPROVED FLOOR-LEVEL EXIT SIGNS WHICH ARE INTERNALLY OR EXTERNALLY ILLUMINATED, PHOTO LUMINESCENT OR SELF-LUMINOUS SHALL BE PROVIDED IN ALL INTERIOR CORRIDORS. BUILDING CODE 1011.6. FIRE CODE 1011.6.

FRANCO ARCHITECTS INC.
12345 Ventura Blvd. H
Studio City, CA 91604
Tel 818 754-2030
Fax 818 754-2032
Architecture and Planning

MAGNOLIA SCIENCE ACADEMY

18220 SHERMAN WAY, RESEDA, CA91335

REV	DESCRIPTION	DATE
	PLAN CHECK #1	6/14/2017

LICENSED ARCHITECT
JOHANN D. WANG
C27010
4/30/2019
RENEWAL DATE
STATE OF CALIFORNIA

PROJECT
MAGNOLIA SCIENCE ACADEMY

PROJECT ADDRESS
18220 SHERMAN WAY,
RESEDA, CA91335

DRAWING TITLE
FIRST FLOOR
REFLECTED CEILING
PLAN

DRAWN BY
ISSUE DATE 6/14/2017
JOB NUMBER
DRAWING SCALE AS NOTED
APPROVED BY:

DRAWING NUMBER
A1.2

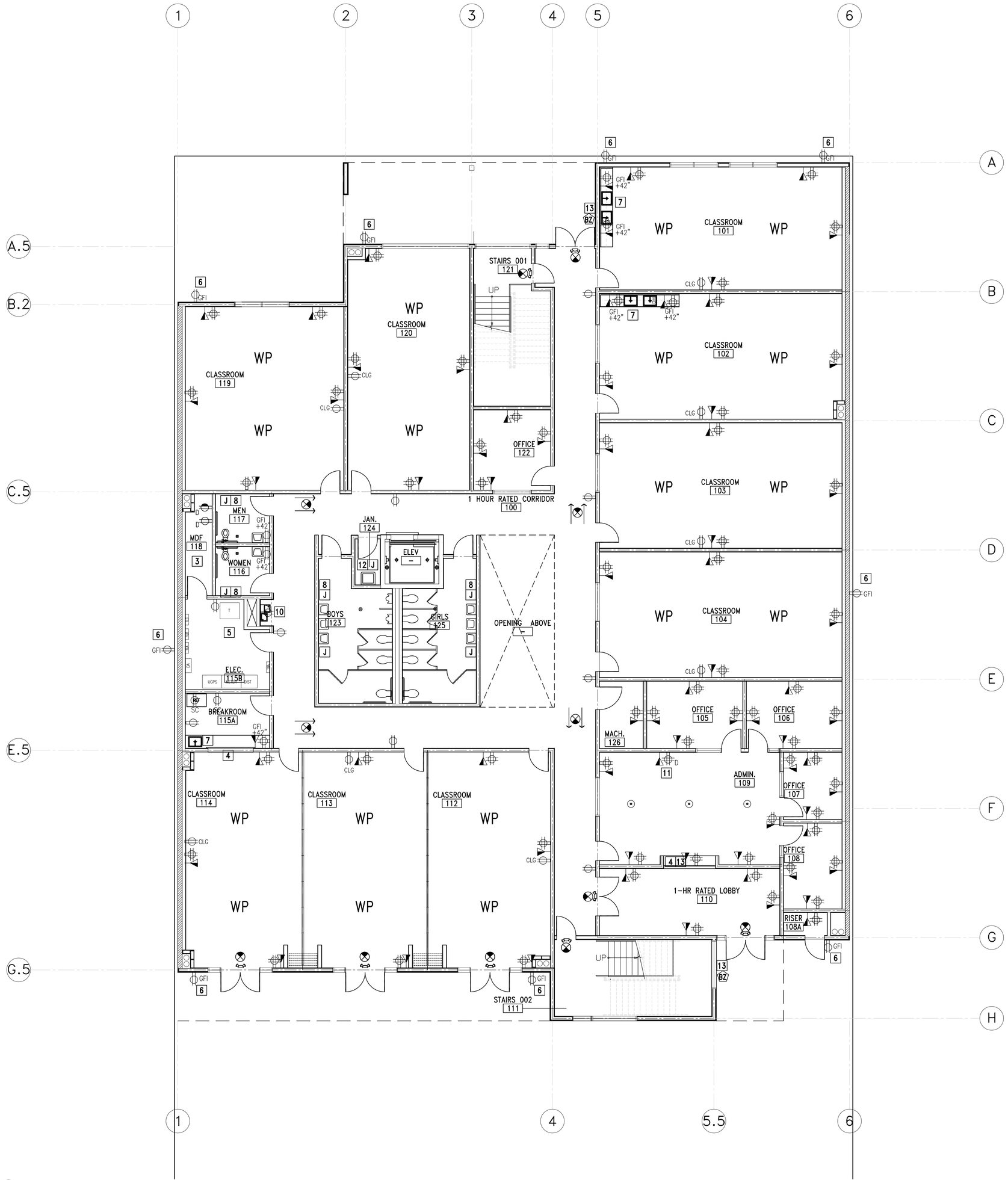

FIRST FLOOR POWER & SIGNAL PLAN

SCALE: 1/8" = 1'-0"

LEGEND

- FLOOR FLUSH MOUNTED DATA
- FLOOR FLUSH MOUNTED POWER OUTLET
- WALL MOUNTED FOURPLEX OUTLET
- WALL MOUNTED DUPLEX OUTLET
- WALL MOUNTED DEDICATED 220 CIRCUIT OUTLET
- CEILING MOUNTED DUPLEX OUTLET
- DEDICATED OUTLETS. SEE ELECTRICAL
- WALL MOUNTED DATA/VOICE – (1) DATA, (1) VOICE
- WALL MOUNTED PHONE OUTLET – (1) VOICE
- J – J-BOX
- GFI – GFI- GROUNDED OUTLET
- X" – X" ABOVE FINISHED FLOOR
- SC – SEPARATE CIRCUIT
- BZ – DOOR BUZZER
- WP – WIRELESS ACCESS POINTS PROVIDED BY OWNER'S DATA VENDOR
- QUAD RECEPTACLE W/ 2 DEDICATED OUTLETS
- J – JUNCTION BOX FOR ELECTRICAL POWERED HAND DRYER, 20A CIRCUIT; DRYER SHALL BE AMERICAN DRYER INC. EXTREMEAIR EXT7-SS.

POWER AND SIGNAL PLAN NOTES

1. IN ALL THE CLASSROOMS, AT EACH FOURPLEX OUTLETS PROVIDE A 1-1/2" CONDUIT FOR DATA.
2. IN ALL THE CLASSROOMS, PROVIDE A DEDICATED CIRCUIT FOR EVERY TWO FOURPLEX OUTLETS.
3. MDF ROOM: PROVIDE 3/4" FIRE TREATED PLYWOOD ON ALL WALLS; PROVIDE (2) DEDICATED 20A DUPLEX RECEPTACLES, EACH ON A SEPARATE CIRCUIT. A DEDICATED 1.5 TON AC UNIT TO BE PROVIDED FOR THIS ROOM. CONTRACTOR TO COORDINATE AND CONFIRM ELECTRICAL REQUIREMENTS WITH CLIENT'S IT PROVIDER.
4. PROVIDE POWER FOR FIRE RATED MOTORIZED ROLL-DOWN COUNTER DOOR PER MANUFACTURER'S RECOMMENDATIONS. SEE COOKSEN MOTOR-OPERATED COUNTER DOOR (OR EQUAL), COLORCOTE FINISH; BETWEEN JAMB MOUNTED; FEATHERDGE. SEE 1/D5.0
5. LOCATE FIRE ALARM CONTROL PANEL IN ELECTRICAL ROOM
6. PROVIDE LOCKABLE COVER PLATES FOR ALL EXTERIOR OUTLETS.
7. PROVIDE POWER FOR INSTA-HOT WATER HEATER AND GARBAGE DISPOSAL. REFER TO PLUMBING PLANS FOR SPECIFICATION.
8. ELECTRIC POWERED HAND DRYER.
9. NOT USED
10. PROVIDE POWER FOR INTERIOR DRINKING FOUNTAIN. REFER TO PLUMBING ENGINEERING DWGS. FOR SPECS.
11. PROVIDE DEDICATED ELECTRICAL OUTLET FOR COPIER.
12. PROVIDE POWER/CONNECTION FOR HOT WATER HEATER WITHIN JANITOR'S CLOSET. REFER TO PLUMBING ENGINEERING DWGS. FOR SPECS.
13. PROVIDE DOOR BUZZER AND COMUNICATION DEVICE WITH CONDUIT TO MAIN GATE ENTRANCE

CA GREEN CODE NOTES

1. PRIOR TO PERMIT BEING FINALED, A COMPLETE REPORT OF THE TESTING AND ADJUSTING SHALL BE PROVIDED TO THE OWNER OR OWNER'S REPRESENTATIVE AND FORM 5.410 – TESTING AND ADJUSTING SHALL BE COMPLETED AND PROVIDED TO THE INSPECTOR. (CAL GREEN 5.410.4)
2. PRIOR TO PERMIT BEING FINALED, A COMPLETE REPORT OF THE COMMISSIONING PROCESS SHALL BE PROVIDED TO THE OWNER OR OWNER'S REPRESENTATIVE AND FORM 5.410 – VERIFICATION SHALL BE COMPLETED AND PROVIDED TO THE INSPECTOR. (CAL GREEN 5.410.2)
3. BUILDING MUST COMPLY WITH THE STATE'S 2008 MANDATORY ENERGY EFFICIENCY STANDARDS. SUBMIT TO MECHANICAL SECTION AND THE ELECTRICAL SECTION FOR REVIEW AND APPROVAL OF ENERGY EFFICIENCY COMPLIANCE. (5.201.1)

FRANCO ARCHITECTS INC.
12345 Ventura Blvd. H
Studio City, CA 91604
Tel 818 754-2030
Fax 818 754-2032
Architecture and Planning

MAGNOLIA SCIENCE ACADEMY
18220 SHERMAN WAY, RESEDA, CA91335

REV	DESCRIPTION	DATE
	PLAN CHECK #1	6/14/2017

LICENSED ARCHITECT
JOHANN D. WANDT
C27010
4/30/2019
RENEWAL DATE
STATE OF CALIFORNIA

PROJECT
MAGNOLIA SCIENCE ACADEMY

PROJECT ADDRESS
18220 SHERMAN WAY, RESEDA, CA91335

DRAWING TITLE
FIRST FLOOR POWER & SIGNAL PLAN

DRAWN BY:
ISSUE DATE: 6/14/2017
JOB NUMBER:
DRAWING SCALE: AS NOTED
APPROVED BY:
DRAWING NUMBER
A1.3

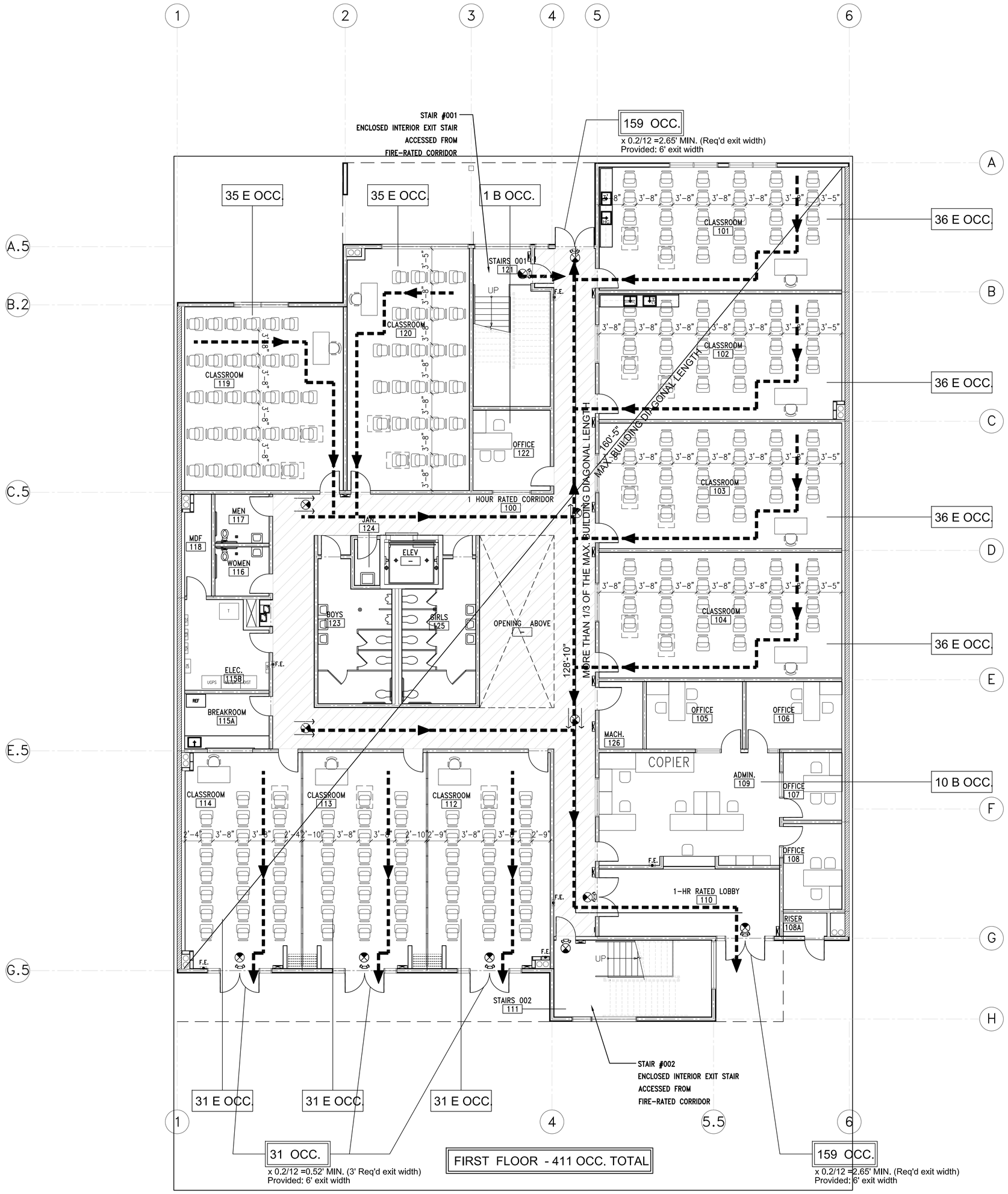

FIRST FLOOR FURNITURE/EXITING PLAN

SCALE: 1/8" = 1'-0"

FURNITURE PLAN LEGEND

LEGEND

48" 30" — 30"x48" HC ACCESS MINIMUM KNEE CLEARANCE 27"H X 30"W X 11"D

WB WB — (2) 4'H. X 6'W. WHITEBOARDS SUPPLIED AND INSTALLED BY GENERAL CONTRACTOR

WHITEBOARD SPECIFICATION:
MANUFACTURER: ABC SCHOOL EQUIPMENT. INC. OR EQUAL
SIZE: 4' H. X 6' W.
COLOR: 454 BRIGHT WHITE

FURNITURE PLAN NOTES

1. FURNITURE TO BE SUPPLIED AND INSTALLED BY TENANT.
2. SEE SHEET A0.3 FOR ADA REQUIREMENTS REGARDING "SPACE ALLOWANCE AND REACH RANGES."

FURNITURE PLAN – GENERAL NOTES

1. VENDING MACHINES SHALL BE INSTALLED IN COMPLIANCE WITH SECTIONS 11B-206, 11B-305, 11B-308 AND 11B-309.
2. UNLESS AN ATTENDANT IS AVAILABLE TO ASSIST PERSONS WITH DISABILITIES, ALL BOOK SHELVING SHALL BE LOCATED NOT MORE THAN 54" ABOVE THE FLOOR.
3. THE TOP OF THE TABLES AND COUNTERS SHALL BE 28" TO 34" FROM THE FLOOR OR GROUND.
4. GC TO PROVIDE WHITEBOARDS. SEE SPECIFICATION.
5. A MINIMUM KNEE CLEARANCE OF 27"H X 30"W X 19"D SHALL BE PROVIDED AT ALL DESKS AND TABLETOPS.
6. NOTE: GENERAL EMPLOYEE AREAS ARE "THOSE AREAS COMMONLY USED BY MULTIPLE EMPLOYEES, SUCH AS RESTROOMS, BREAK ROOMS, CONFERENCE AND MEETING SPACE, ETC." EVEN WHEN THESE AREAS ARE RESTRICTED FOR EMPLOYEE USE ONLY, THEY COMPLY WITH TITLE 24 ACCESSIBILITY REQUIREMENTS.
7. NOTE: SPECIFIC WORK STATIONS IS INTENDED TO MEAN "PLACES WHERE INDIVIDUALS DO THEIR WORK, SUCH AS CHEF'S CHOPPING BLOCK IN A COMMERCIAL RESTAURANT OR A COMPUTER TERMINAL IN AN OFFICE." THESE WORK STATIONS ARE NOT REQUIRED TO BE ACCESSIBLE THEMSELVES, EXCEPT THAT AISLE AND FLOOR AND LEVEL REQUIREMENTS MUST BE MET AND ENTRYWAYS MUST BE AT LEAST 32" IN CLEAR WIDTH.
8. COMMON USE CIRCULATION PATHS WITHIN EMPLOYEE WORK AREAS SHALL COMPLY WITH SECTION 11B-402. 11B206.2.8 EXCEPTION: 2. COMMON USE CIRCULATION PATHS LOCATED WITHIN WITHIN EMPLOYEE WORK AREAS THAT ARE AN INTEGRAL COMPONENT OF WORK AREA EQUIPMENT SHALL NOT BE REQUIRED TO COMPLY WITH 11B-402.
3. COMMON USE CIRCULATION PATHS LOCATED WITHIN EXTERIOR EMPLOYEE WORK AREAS THAT ARE FULLY EXPOSED TO THE WEATHER SHALL NOT BE REQUIRED TO COMPLY WITH 11B-402.
9. SECTION 11B-403 WALKING SURFACE, AND 11B-904 CHECK OUT AISLES AND SALES AND SERVICE COUNTER.
10. 403.5 CLEARANCES. WALKING SURFACES SHALL PROVIDE CLEARANCES COMPLYING WITH SECTION 11B-403.5.

EXITING PLAN LEGEND & NOTES

LEGEND

- EXITING PATH
- XX' — EXITING PATH DISTANCE (IN FEET)
- ONE HOUR RATED CORRIDOR
- - OCC. — OCCUPANCY COUNT (SEE BUILDING LIMITATIONS PLAN 1/A0.4 FOR OCCUPANCY TYPE AND CALCULATIONS)
- EXIT/COMBO LIGHT PER ELECTRICAL FIXTURE SCHEDULE. COMPLIANCE WITH BLDG. CODE SEC. 1011.4. SURFACE MTD.; (L) SELF-ILLUMINATED LOW LEVEL EXIT SIGN PROVIDED CONJUNCTION WITH EXIT SIGNAGE PACKAGE (WHERE SHOWN)
- FLOOR LEVEL EXIT SIGN
- F.E. — SEMI-RECESSED FIRE EXTINGUISHERS SEE SPECIFICATIONS AND DETAIL 7/D5.0 8/D5.0

EXITING PLAN – GENERAL NOTES

1. FULLY SPRINKLERED OCCUPANCY E MAX. ALLOWABLE TRAVEL DISTANCE IS 250'-0". ALL TRAVEL DISTANCES SHOWN ABOVE FALL UNDER 250'-0".
2. FULLY SPRINKLERED OCCUPANCY B MAX. ALLOWABLE TRAVEL DISTANCE IS 300'-0". ALL TRAVEL DISTANCES SHOWN ABOVE FALL UNDER 300'-0".
3. REFER TO THE BUILDING LIMITATIONS SHEET "A0.4" FOR INDIVIDUAL ROOM CALCULATIONS AND SQUAREFOOTAGES.
4. WHERE TWO OR MORE EXITS ARE REQUIRED, AT LEAST TWO EXITS MUST BE SEPARATED BY (HALF) (1/3) THE MAX. DIAGONAL LENGTH OF THE AREA SERVED. (1015.2.1)
5. THE EXIT PATH SHALL BE IDENTIFIED BY EXIT SIGNS CONFORMING TO THE REQUIREMENTS OF SECTION 1011. EXIT SIGNS SHALL BE READILY VISIBLE FROM ANY DIRECTION OF APPROACH. EXIT SIGNS SHALL BE LOCATED AS NECESSARY TO CLEARLY INDICATE THE DIRECTION OF EGRESS TRAVEL. NO POINT SHALL BE MORE THAN 100 FEET FROM THE NEAREST VISIBLE SIGN. (1011).
6. PROVIDE FLOOR-LEVEL EXIT SIGNS IN ALL INTERIOR CORRIDORS OF GROUP A, E, OCCUPANCIES. (1011.6)
7. PRIMARY STRUCTURAL FRAME TO BE 1-HOUR RATED CONSTRUCTION.
8. LOAD BEARING WALLS (EXTERIOR AND INTERIOR) TO BE 1 HOUR RATED CONSTRUCTION. (SEE SHEETS A1.1 AND A2.1 FOR WALL TYPES.)
9. ROOF CONSTRUCTION AND SECONDARY MEMBERS TO BE 1 HOUR RATED CONSTRUCTION.
10. PER SEC. 709.1-4 AND TABLE 1018.1, CORRIDOR WALLS SHALL HAVE A 1 HOUR FIRE PARTITION.
11. FLOOR CONSTRUCTION AND SECONDARY MEMBERS TO BE 1 HOUR RATED CONSTRUCTION. FLOOR/CEILING ASSEMBLY PROVIDED IS PER ITEM #26-1.1 IN TABLE 702.1(3) IN CBC 2010.
12. FIRE-RESISTANCE-RATED CORRIDORS SHALL BE CONTINUOUS FROM THE POINT OF ENTRY TO AN EXIT, AND SHALL NOT BE INTERRUPTED BY INTERVENING ROOMS. (1018.6)
EXCEPTION #1: FOYERS, LOBBIES OR RECEPTION ROOMS CONSTRUCTED AS REQUIRED FOR CORRIDORS SHALL NOT BE CONSTRUED AS INTERVENING ROOMS.

FIRE DEPARTMENT – GENERAL NOTES

1. COMPLY WITH POSTING OF ROOM CAPACITY. FIRE CODE 2501.16.1 TITLE 24, SECTION 1004.3. (SUBJECT TO FIELD INSPECTION APPROVAL)
2. THE MEANS OF EGRESS, AND EXIT DISCHARGE, SHALL BE ILLUMINATED AT ANY TIME THE BUILDING IS OCCUPIED WITH A LIGHT INTENSITY OF NOT LESS THAN 1 FOOT-CANDLE AT THE WALKING SURFACE LEVEL. BUILDING CODE 1006.2
3. EXITS, EXIT ACCESS DOORS AND PATHS OF EGRESS TRAVEL THAT IS NOT IMMEDIATELY VISIBLE TO THE OCCUPANTS SHALL BE MARKED BY AN APPROVED EXIT SIGN THAT IS READILY VISIBLE FROM ANY DIRECTION OF EGRESS TRAVEL. EXIT SIGNS SHALL BE INTERNALLY OR EXTERNALLY ILLUMINATED. BUILDING CODE 1011
NOTE: ADDITIONAL EXIT SIGNS MAY BE REQUIRED AT TIME OF FIELD INSPECTION.
4. PROVIDE LOW-LEVEL EXIT SIGNS PER TITLE 24, 1011.6.
5. PORTABLE FIRE EXTINGUISHERS SHALL BE INSTALLED IN LOCATIONS AS REQUIRED BY FIRE CODE 906.
6. PROVIDE AN AUTOMATIC SPRINKLER SYSTEM.
7. EVERY ROOM OR SPACE THAT IS AN ASSEMBLY OCCUPANCY SHALL HAVE THE OCCUPANT LOAD OF THE ROOM OR SPACE POSTED IN A CONSPICUOUS PLACE, NEAR THE MAIN EXIT OR EXIT ACCESS DOORWAY FROM THE ROOM OR SPACE. POSTED SIGNS SHALL BE OF AN APPROVED LEGIBLE PERMANENT DESIGN AND SHALL BE MAINTAINED BY THE OWNER OR AUTHORIZED AGENT. BUILDING CODE 1004.3. FIRE CODE 1004.3.
8. WHERE EXIT SIGNS ARE REQUIRED, ADDITIONAL APPROVED FLOOR-LEVEL EXIT SIGNS WHICH ARE INTERNALLY OR EXTERNALLY ILLUMINATED, PHOTO LUMINESCENT OR SELF-LUMINOUS SHALL BE PROVIDED IN ALL INTERIOR CORRIDORS. BUILDING CODE 1011.6. FIRE CODE 1011.6.

FRANCO ARCHITECTS INC.
12345 Ventura Blvd. H
Studio City, CA 91604
Tel 818 754-2030
Fax 818 754-2032
Architecture and Planning

MAGNOLIA SCIENCE ACADEMY
18220 SHERMAN WAY, RESEDA, CA91335

REV	DESCRIPTION	DATE
	PLAN CHECK #1	6/14/2017

LICENSED ARCHITECT JOHANN D. WANG C27010 4/30/2019 RENEWAL DATE STATE OF CALIFORNIA

PROJECT: MAGNOLIA SCIENCE ACADEMY

PROJECT ADDRESS: 18220 SHERMAN WAY, RESEDA, CA91335

DRAWING TITLE: FIRST FLOOR FURNITURE/EXITING PLAN

DRAWN BY:

ISSUE DATE: 6/14/2017

JOB NUMBER:

DRAWING SCALE: AS NOTED

APPROVED BY:

DRAWING NUMBER: A1.4

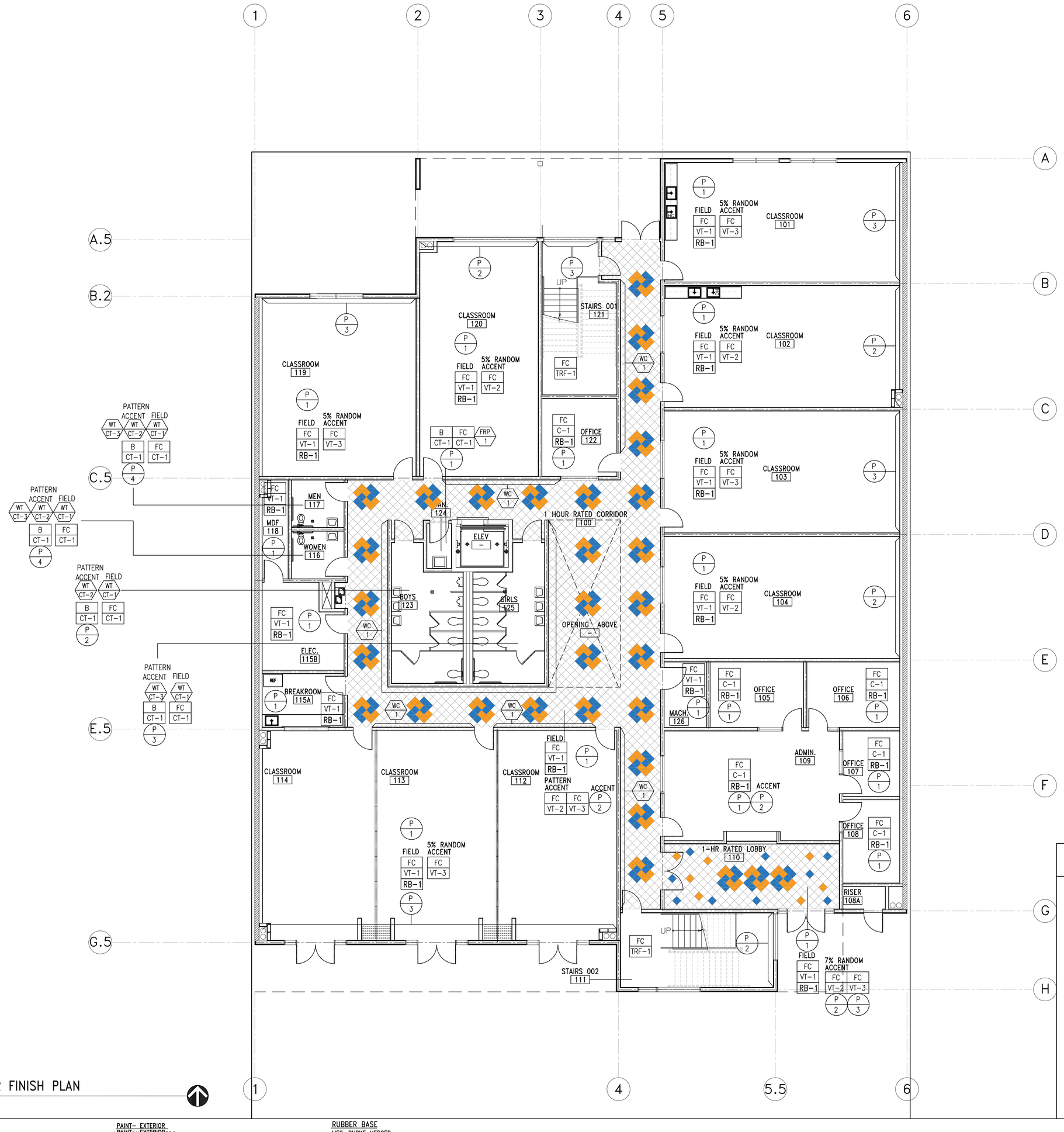

FIRST FLOOR FINISH PLAN

SCALE: 1/8" = 1'-0"

FINISH NOTES

1. CONTRACTOR SHALL SUBMIT 8"x8" SAMPLES OF ALL FINISHES TO ARCHITECT FOR APPROVAL, AT LEAST 2 WEEKS PRIOR TO INSTALL.
2. CONTRACTOR SHALL FOLLOW ALL MANUFACTURERS RECOMMENDATIONS & INSTRUCTIONS FOR THE INSTALL. OF ANY FINISHES OR PRODUCTS.
3. ALL MATERIAL AND ITS INSTALLATION SHALL COMPLY W/ ALL BUILDING FIRE & ADA CODES IN EFFECT IN THE CITY OF LOS ANGELES.
4. U.O.N. ALL ACCESS DOORS & PANELS SHALL BE PAINTED TO MATCH ADJ. SURFACE COLOR & FINISH.
5. G.C. AND THEIR SUBS SHALL BE RESPONSIBLE FOR ANY WALLCOVERING INSTALLATIONS.
6. ALL PRIMING & OR SIZING OF WALLS TO RECEIVE WALLCOVERING SHALL BE DONE BY THE SUB CONTRACTOR INSTALLING THE WALLCOVERING.
7. CONTRACTOR SHALL SUBMIT A CARPET SEAMING DIAGRAM & DIRECTION OF CARPET TO ARCHITECT AT LEAST 2 WEEKS PRIOR TO INSTALL.
8. FLOORING SUB SHALL PRE-INSPECT EXIST. FLOOR SLAB TO CHECK FOR CRACKS & UNEVENNESS. FLOAT FLOORS FOR PROPER INSTALLATIONS OF FLOOR FINISHES AS REQ'D. CONTRACTOR SHALL INCLUDE ALL COSTS TO PROPERLY PREPARE SLAB FOR SPECIFIED FINISH.
9. NO SUBSTITUTIONS OF FINISHES SHALL BE MADE W/OUT PRIOR WRITTEN APPROVAL FROM ARCHITECT.
10. PAINT INSIDE FACE OF ANY LIGHT COVES FLAT FINISH.
11. ALL DRYWALL CEILINGS SHALL BE PREPPED TO RECEIVE FLAT LATEX PAINT FINISH WITHOUT ANY APPARENT SEAMS OR IMPERFECTIONS.
12. CABINET SUB CONTRACTOR SHALL BE RESPONSIBLE FOR ALL FINISHES ON CABINETRY AS SHOWN ON MILLWORK PLANS.
13. WASH ALL REMAINING FLOORING.
14. INTERIOR FINISH SHALL BE PROVIDED IN ACCORDANCE TO TITLE 24, SECTION 804, AS FOLLOWS: CLASS I-VERTICAL ENCLOSURES; CLASS III-CORRIDORS; CLASS III-ROOMS.
    ALL DRAPES, HANGINGS, CURTAINS, DROPS AND ALL OTHER DECORATIVE MATERIAL TO COMPLY WITH FIRE CODE SECTION 1103.3.3.
16. PROVIDE ANTI-GRAFFITI FINISH AT THE FIRST 9 FEET, MEASURED FROM GRADE, AT EXTERIOR WALLS AND DOORS. (PAINTED SURFACE - LARR #25601T, UNFINISHED SURFACE - LARR #252861)
17. INTERIOR WALL AND CEILING FINISHES SHALL BE PROVIDED IN ACCORDANCE WITH BUILDING CODE 801 AND TABLE 803.9.
18. CURTAINS, DRAPERIES, HANGINGS AND OTHER DECORATIVE MATERIALS SUSPENDED FROM WALLS OR CEILINGS SHALL MEET THE FLAME PROPAGATION PERFORMANCE CRITERIA OF NFPA 701, IN ACCORDANCE WITH BUILDING CODE 806.2 OR BE NONCOMBUSTIBLE. BUILDING CODE 806.1.
19. ALL FLOORING TO BE SLIP-RESISTANT PER ADA CODE
20. TOILET ROOM FLOORS SHALL HAVE A SMOOTH, HARD NON ABSORBENT SURFACE SUCH AS PORTLAND CEMENT, CERAMIC TILE OR OTHER APPROVED MATERIAL THAT EXTENDS UPWARD ONTO THE WALLS AT LEAST 4" (1210.2.1)
21. WALLS WITHIN 2 FEET (610 MM) OF THE FRONT AND SIDES OF URINALS AND WATER CLOSETS SHALL HAVE A SMOOTH, HARD NON-ABSORBENT SURFACE OF PORTLAND CEMENT, CONCRETE, CERAMIC TILE OR OTHER SMOOTH, HARD NON-ABSORBENT SURFACE TO A HEIGHT OF 4 FEET (1219 MM), AND EXCEPT FOR STRUCTURAL ELEMENTS, THE MATERIALS USED IN SUCH WALLS SHALL BE OF A TYPE THAT IS NOT ADVERSELY AFFECTED BY MOISTURE. (1210.2.2)
22. CEMENT, FIBER-CEMENT OR GLASS MAT GYPSUM BACKERS IN COMPLIANCE WITH ASTM C1178, C1288 OR C1325 SHALL BE USED AS A BASE FOR WALL TILE IN TUB AND SHOWER AREAS AND WALL AND CEILING PANELS IN SHOWER AREAS. WATER-RESISTANCE GYPSUM BACKING BOARD SHALL BE USED AS A BASE FOR TILE IN WATER CLOSET COMPARTMENT WALLS WHEN INSTALLED IN ACCORDANCE WITH GA-216 OR ASTM C840. REGULAR GYPSUM WALLBOARD IS PERMITTED UNDER TILE OR WALL PANELS IN OTHER WALL AND CEILING AREAS WHEN INSTALLED IN ACCORDANCE WITH GA-216 OR ASTM C840. WATER-RESISTANT GYPSUM BOARD SHALL NOT BE USED IN THE FOLLOWING LOCATIONS: SECTION 2506.1
    a. OVER A VAPOR RETARDER.
    b. IN AREAS SUBJECT TO CONTINUOUS HIGH HUMIDITY, SUCH AS SAUNAS, STEAM ROOMS OR GANG SHOWER ROOMS
    c. ON CEILINGS WHERE FRAME SPACING EXCEEDS 12 INCHES O.C. FOR 1/2 INCH THICK AND MORE THAN 16 INCHES O.C. FOR 5/8 INCH THICK.
23. EVERY SPACE INTENDED FOR HUMAN OCCUPANCY SHALL BE PROVIDED WITH NATURAL LIGHT BY MEANS OF EXTERIOR GLAZED OPENINGS IN ACCORDANCE WITH SECTION 1205.2 OR SHALL BE PROVIDED WITH ARTIFICIAL LIGHT THAT IS ADEQUATE TO PROVIDE AN AVERAGE ILLUMINATION OF 10 FOOT-CANDLES OVER THE AREA OF THE ROOM AT A HEIGHT OF 30 INCHES ABOVE THE FLOOR LEVEL. (1205.1 AND 1205.3)

FINISH PLAN NOTES

1. INTERIOR FINISH MATERIALS APPLIED TO WALL AND CEILING SHALL BE TESTED AS SPECIFIED IN SECTION 803. OF THE CBC.
2. IN JANITOR CLOSET INSTALL FRP 48" AFF AROUND MOP SINK, 24" AWAY FROM SINK ON BOTH SIDES.
3. PROVIDE A LEVEL "5" SMOOTH FINISH FOR ALL DRYWALL
4. EXTERIOR STUCCO TO BE TROWEL APPLIED. PROVIDE DUNNE EDWARDS ENDURALASTIC 10 ELASTOMERIC FLAT FINISH PRIOR TO APPLYING FINAL ACRIBOND FLAT PAINT COLOR.

CA GREEN CODE NOTES

ENVIRONMENTAL QUALITY

1. IF THE HVAC SYSTEM IS USED DURING CONSTRUCTION, PROVIDE RETURN AIR FILTERS WITH A MINIMUN EFFICIENCY REPORTING VALUE (MERV) OF 8, BASED ON ASHRAE 52.2-1999, OR AN AVERAGE EFFICIENCY OF 30 PERCENT, BASED ON ASHRAE 52.1-1992. REPLACE ALL FILTERS PRIOR TO OCCUPANCY OTR AT THE CONCLUSION OF CONSTRUCTION.

2. AT THE TIME OF ROUGH INSTALLATION, OR DURING STORAGE ON THE CONSTRUCTION SITE AND UNTIL FINAL STARTUP OF THE HEATING AND COOLING EQUIPMENT, ALL DUCT AND OTHER RELATED AIR DISTRIBUTION COMPONENT OPENINGS SHALL BE COVERED WITH TAPE, PLASTIC, SHEET METAL, OR OTHER ACCEPTABLE METHODS TO REDUCE THE AMOUNT OR DUST OR DEBRIS WHICH MAY COLLECT IN THE SYSTEM." (5.504.3)

3. PROVIDE FINISH PLAN COMPLYING WITH THE FOLLOWING:
   c. ADHESIVES, SEALANTS AND CAULKS, PAINTS AND COATINGS, AND AEROSOL PAINTS AND COATINGS SHALL MEET OR EXCEED THE STANDARDS OUTLINED IN SECTIONS 5.504.4.1, 5.504.4.3, AND 5.504.4.3.1 RESPECTIVELY. VERIFICATION OF COMPLIANCE WITH THESE SECTIONS MUST BE PROVIDED AT THE TIME OF INSPECTION.

   b. ALL CARPET INSTALLED IN THE BUILDING INTERIOR SHALL MEET THE TESTING AND PRODUCT REQUIREMENTS OF ONE OF THE FOLLOWING: (5.504.4.4)
      I. CARPET AND RUG INSTITUTE'S GREEN LABEL PLUS PROGRAM OR
      II. CALIFORNIA DEPARTMENT OF PUBLIC HEALTH STANDARD PRACTICE FOR THE TESTING OF VOC'S (SPEC 01350) OR
      III. NSF/ANSI 140 AT THE GOLD LEVEL OR
      IV. SCIENTIFIC CERTIFICATIONS SYSTEMS SUSTAINABLE CHOICE

   c. ALL CARPET CUSHION INSTALLED IN THE BUILDING INTERIOR SHALL MEET THE REQUIREMENTS OF THE CARPET AND RUG INSTITUTE GREEN LABEL PROGRAM. CARPET ADHESIVES SHALL NOT EXCEED A VOC LIMIT OF 50 G/L. (5.504.4.4.1, 5.504.4.4.2)

   d. COMPOSITE WOOD PRODUCTS (HARDWOOD PLYWOOD, PARTICLE BOARD, AND MDF COMPOSITE WOOD) INSTALLED ON THE INTERIOR OR EXTERIOR OF THE BUILDING SHALL MEET OR EXCEED THE STANDARDS OUTLINED IN TABLE 5.504.4.5. (5.504.4.5)

   e. MINIMUM OF 50% OF FLOOR AREA RECEIVING RESILIENT FLOORING SHALL COMPLY WITH THE VOC EMISSION LIMITS DEFINED IN THE CHPS LOW-EMITTING MATERIALS LIST OR CERTIFIED UNDER THE RFCI FLOORSCORE PROGRAM. VERIFICATION OF COMPLIANCE WITH THESE SECTIONS MUST BE PROVIDED AT THE TIME OF INSPECTION. (5.504.4.6)

TYPICAL CORRIDOR WALLS

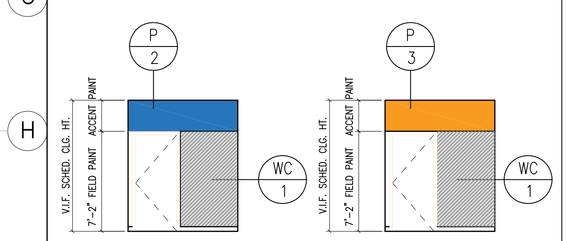

FIRST FLOOR SECOND FLOOR

ACCENT PAINT TO BE ABOVE DOORS UP TO CEILING EVERYWHERE IN CORRIDORS

FINISH SPECIFICATIONS:

PAINT- INTERIOR

P 1 — MFG.: DUNN EDWARDS
COLOR: DEW338 WHITE HEAT
FINISH: SEMI GLOSS
LOCATION: THROUGHOUT U.O.N.

P 2 — MFG.: DUNN EDWARDS
COLOR: DET573 MOUNTAIN BLUEBIRD
FINISH: SEMI GLOSS
LOCATION: ACCENT- WHERE IS SPECIFIED

P 3 — MFG.: DUNN EDWARDS
COLOR: DEX194 TANGERINE TANGO
FINISH: SEMI GLOSS
LOCATION: ACCENT- WHERE IS SPECIFIED

P 4 — MFG.: DUNN EDWARDS
COLOR: DE6381 SILVER BULLET
FINISH: SEMI GLOSS
LOCATION: ACCENT- RESTROOMS

PAINT- EXTERIOR

P 1 — MFG.: DUNN EDWARDS
COLOR: TBA
FINISH: ENDURALASTIC 10 ELASTOMERIC FLAT PAINT
LOCATION: EXTERIOR PAINT COLOR WHERE SPECIFIED

P X — MFG.: DUNN EDWARDS
COLOR: TBA
FINISH: ENDURALASTIC 10 ELASTOMERIC FLAT PAINT
LOCATION: EXTERIOR PAINT COLOR WHERE SPECIFIED

P X — MFG.: DUNN EDWARDS
COLOR: TBA
FINISH: ENDURALASTIC 10 ELASTOMERIC FLAT PAINT
LOCATION: EXTERIOR PAINT COLOR WHERE SPECIFIED

P X — MFG.: DUNN EDWARDS
COLOR: TBA
FINISH: ENDURALASTIC 10 ELASTOMERIC FLAT PAINT
LOCATION: EXTERIOR PAINT COLOR WHERE SPECIFIED

P X — MFG.: DUNN EDWARDS
COLOR: TBA
FINISH: ENDURALASTIC 10 ELASTOMERIC FLAT PAINT
LOCATION: EXTERIOR PAINT COLOR WHERE SPECIFIED

P X — MFG.: DUNN EDWARDS
COLOR: TBA
FINISH: ENDURALASTIC 10 ELASTOMERIC FLAT PAINT
LOCATION: EXTERIOR PAINT COLOR WHERE SPECIFIED

*NOTE: FOR EXTERIOR PAINT PROVIDE ANTI-GRAFFITI FINISH AT THE FIRST 9 FEET, MEASURED FROM GRADE, AT EXTERIOR WALLS AND DOORS. (6306) (PAINTED SURFACE-LARR #25601T)

RB-1 — RUBBER BASE
MFG: BURKE MERCER
TYPE: 4" COVED
COLOR: 217 CHARCOAL
LOCATION: THROUGHOUT (U.O.N)

PLASTIC LAMINATE

PL-1 — MFG.: WILSONART
COLOR: 10338-60 MARMALADE
FINISH: MATTE FINISH
LOCATION: SEE CABINETWORK SHEETS

PL-2 — MFG.: WILSONART
COLOR: 10356-60 SEA BERRY
FINISH: MATTE FINISH
LOCATION: SEE CABINETWORK SHEETS

PL-3 — MFG.: WILSONART
COLOR: 090-60 NORTH SEA
FINISH: MATTE FINISH
LOCATION: SEE CABINETWORK SHEETS

PL-4 — MFG.: WILSONART
COLOR: 10393-60 OXIDIZED SILVER
FINISH: MATTE FINISH
LOCATION: SEE CABINETWORK SHEETS

QS-1 — QUARTZ STONE
MFG: PENTAL QUARTZ
TYPE: 3/4" SLAB
COLOR: BS1249 COASTAL GREY POLISHED
BACKSPLASH: 12" ALL WAY AROUND COUNTER
LOCATION: SEE CABINETWORK SHEETS

EP-1 — EPOXY RESIN
MFG.: ISEC
COLOR: BLACK
LOCATION: SEE CABINETWORK SHEETS- LABS
NOTE: ALL HORIZONTAL SURFACES (U.O.N.)

VINYL COMPOSITION TILE

FC VT-1 — MFG.: ARMSTRONG- STANDARD EXCELON
COLOR: 51807 SHADOW BLUE
SIZE: 12"x12"
LOCATION: FIELD THROUGHOUT (U.O.N.)

FC VT-2 — MFG.: ARMSTRONG- RAVE
COLOR: 57508 BODACIOUS BLUE
SIZE: 12"x12"
LOCATION: ACCENT COLOR WHERE SPECIFIED ON PLAN

FC VT-3 — MFG.: ARMSTRONG- RAVE
COLOR: 57516 SCREAMIN' PUMPKIN
SIZE: 12"x12"
LOCATION: ACCENT COLOR WHERE SPECIFIED ON PLAN

FRP 1 — FIBERGLASS REINFORCED PANEL
MFG.: KOROGUARD PROTECTIVE SHEET WALLCOVERING
COLOR: LIGHT GRAY
THICKNESS: 0.060"
LOCATION: JANITOR'S CLOSET RMS. #124 & #221 BEHIND MOP SINKS A 48"AFF. AND WALLS AT 24" AWAY FROM SINK ON BOTH SIDES

CERAMIC TILE (WALLS)

WT CT-1 — MFG.: DALTILE
TYPE: SEMI-GLOSS
COLOR: 0135 ALMOND (1)
SIZE: 4"X 4"
LOCATION: RESTROOM WALLS (FIELD)

WT CT-2 — MFG.: DALTILE
TYPE: SEMI-GLOSS
COLOR: 0049 OCEAN BLUE (4)
SIZE: 4"X 4"
LOCATION: RESTROOM WALLS (ACCENT)
SEE RESTROOM TILE PATTERN ELEVATION

WT CT-3 — MFG.: DALTILE
TYPE: SEMI-GLOSS
COLOR: Q097 ORANGE BURST (4)
SIZE: 4"X 4"
LOCATION: RESTROOM WALLS (ACCENT)
SEE RESTROOM TILE PATTERN ELEVATION

B CT-1 — CERAMIC TILE BASE
MFG.: DALTILE
TYPE: KEYSTONES
COLOR: D208 SUEDE GRAY SPECKLE
BUILT UP BASE MB-58
SIZE: 2" X 2"
LOCATION: RESTROOM WALLS

FC CT-1 — CERAMIC TILE (FLOOR)
MFG.: DALTILE
TYPE: KEYSTONES
COLOR: D208 SUEDE GRAY SPECKLE
SIZE: 2" X 2"
LOCATION: RESTROOM FLOORS

TILE GROUT
MFG.: CUSTOM BUILDING PRODUCTS
COLOR: #101 QUARTZ
LOCATION: WALLS

MFG.: CUSTOM BUILDING PRODUCTS
COLOR: #19 PEWTER
LOCATION: FLOOR & WALL BASE ONLY

FC TRF-1 — STAIR TREAD/RISER/LANDING
MFG.: BURKE UNI-STEP STAIR SYSTEM
COLOR: 027 AGATE GRAY
STYLE: ENDURA FLECKSIBLES ONE STEP TREAD RISER
VISUALLY IMPAIRED COLOR: BRICK
LOCATION: ALL INTERIOR STAIR TREAD/RISER/LANDING

FC C-1 — CARPET
MFG: SHAW
TYPE: COLOR FRAME
COLOR: DISAPPEAR 81557
LOCATION: OFFICE/ADMIN FIELD

WC 1 — WALL CARPET
MFG.: SHAW
STYLE: 234MC METROWALL II
COLOR: 34500 SILVER FOX
LOCATION: CORRIDOR WALLS- SCHOOL TO APPROVE
NOTE: ADD METAL TRIM AROUND EVERY EDGE OF WALL COVERING, INCLUDING ALONG THE DOORS AND EDGE OF THE RUBBER BASE

RESTROOM WALL DESIGN DETAIL- TYPICAL

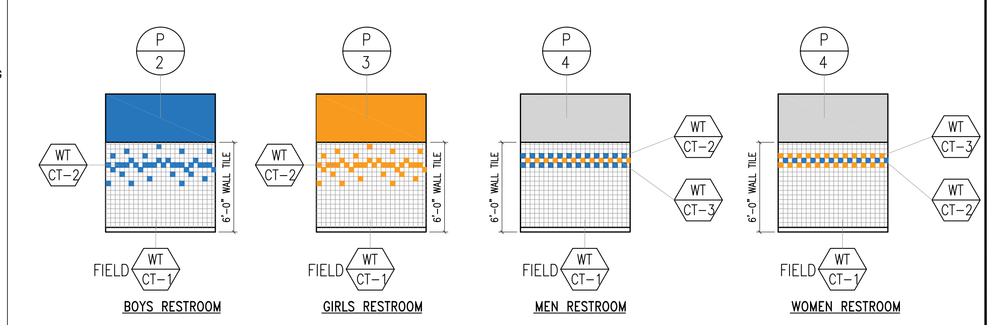

BOYS RESTROOM GIRLS RESTROOM MEN RESTROOM WOMEN RESTROOM

FRANCO ARCHITECTS INC.
12345 Ventura Blvd. H
Studio City, CA 91604
Tel 818 754-2030
Fax 818 754-2032
Architecture and Planning

MAGNOLIA SCIENCE ACADEMY
18220 SHERMAN WAY, RESEDA, CA91335

REV	DESCRIPTION	DATE
	PLAN CHECK #1	6/14/2017

LICENSED ARCHITECT JOHANN D. WANG C27010 4/30/2019 RENEWAL DATE STATE OF CALIFORNIA

PROJECT: MAGNOLIA SCIENCE ACADEMY
PROJECT ADDRESS: 18220 SHERMAN WAY, RESEDA, CA91335
DRAWING TITLE: FIRST FLOOR FINISH PLAN PLAN
DRAWN BY:
ISSUE DATE: 6/14/2017
JOB NUMBER:
DRAWING SCALE: AS NOTED
APPROVED BY:
DRAWING NUMBER: A1.5

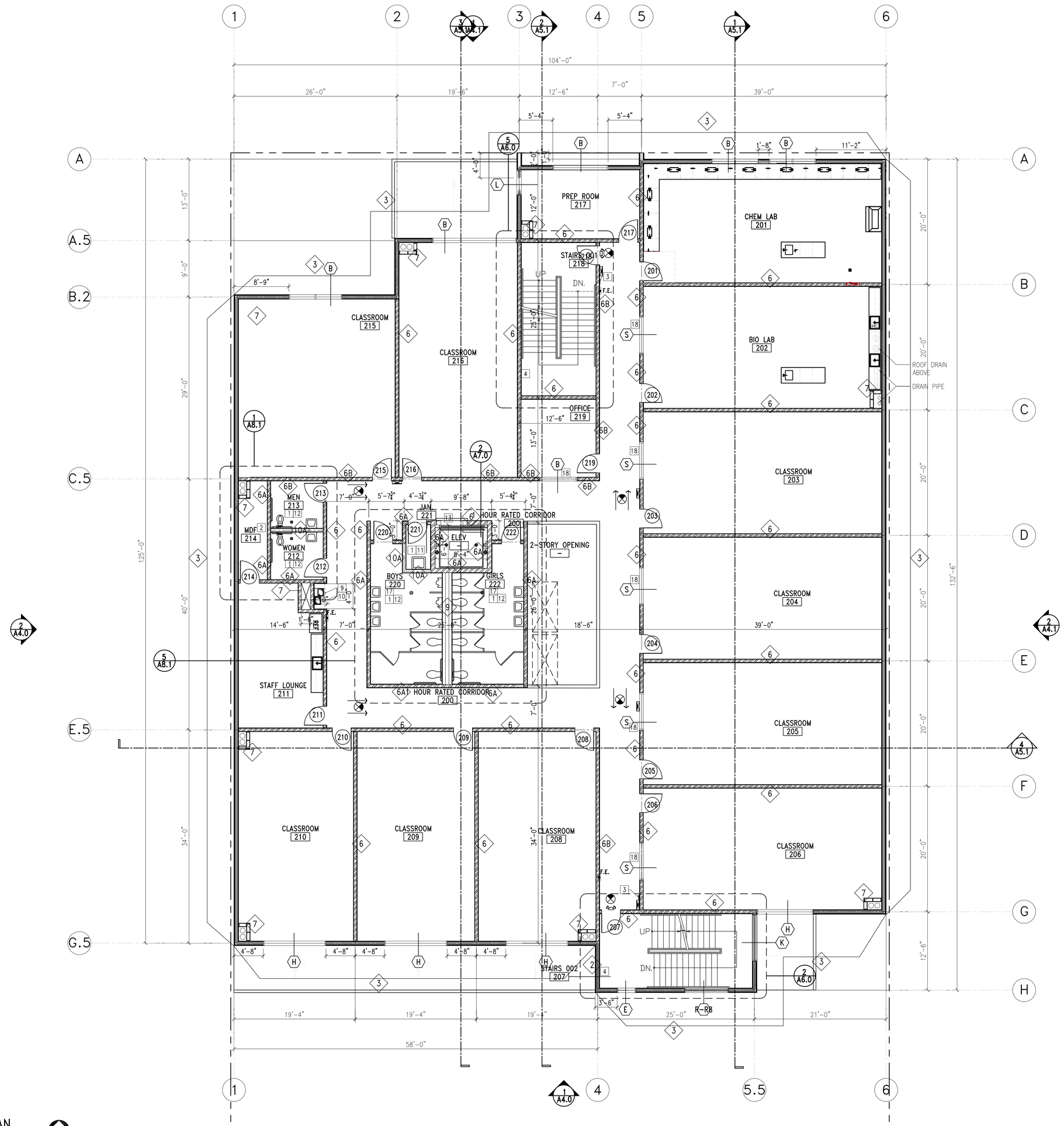

SECOND FLOOR CONSTRUCTION PLAN

SCALE: 1/8" = 1'-0"

GENERAL NOTES

1. FIELD VERIFY ALL CONDITIONS BEFORE ALL WORK.
2. FURNISH & INSTALL ANY BLOCKING OR SEISMIC BRACING REQ'D BY FURNITURE OR CABINETWORK. REFER TO FURNITURE/CABINETWORK PLANS & DETAILS.
3. FIRE ALARM SYSTEM SHALL BE UNDER SEPARATE PERMIT. FIRE ALARM CONTRACTOR SHALL PREPARE AND SUBMIT COMPLETE FIRE ALARM PLANS AND SPECIFICATIONS TO THE FIRE PREVENTION BUREAU AS REQUIRED BY CBC 305.7 & 305.9. DEVICE LOCATION PLANS SHALL BE SUBMITTED TO THE ARCHITECT FOR APPROVAL PRIOR TO INSTALLATION.
4. ALL EXIT DOORS TO BE OPENABLE FROM INSIDE WITHOUT USE OF A KEY OR ANY SPECIAL KNOWLEDGE OR EFFORT (CBC 1003.3.1.8)
5. ALL EXIT DOORS WILL BE PROVIDED WITH PANIC HARDWARE ONLY WHEN OCCUPANT LOAD IS GREATER THAN 50.
6. SHAFTS TO BE ENCLOSED IN COMPLIANCE WITH BUILDING CODE SECTION 711.
7. WIDTH AND HEIGHT OF REQUIRED EXIT DOORWAYS TO COMPLY WITH BUILDING CODE SECTION 1003.3.1.3.
8. EXIT DOORS SHALL SWING IN THE DIRECTION OF EXIT TRAVEL WHEN SERVING ANY HAZARDOUS AREA OR WHEN SERVING AN OCCUPANT LOAD OF 50 OR MORE.
9. INTERIOR WALL & CEILING FINISHES SHALL BE PROVIDED IN ACCORDANCE TO C.C.R TITLE 24, PART 2, CHAPTER 8 AND SHALL NOT EXCEED A FLAME SPREAD CLASS AS FOLLOWS:
   CLASS II–EXIT CORRIDORS; CLASS III–CLASSROOM
10. ALL DRAPES, HANGINGS, CURTAINS, DROPS AND OTHER DECORATIVE MATERIAL TO COMPLY WITH FIRE CODE SECTION 1103.5.3.
11. SEE PLUMBING PLANS FOR ACCESS PANEL SPECIFICATIONS AND LOCATIONS.
12. PENETRATIONS IN WALLS REQUIRING PROTECTED OPENINGS MUST BE FIRE–STOPPED WITH AN APPROVED MATERIAL IN IN ACCORDANCE WITH SECTION 713.3 SPACE BETWEEN PENETRATING MATERIALS MUST BE DESIGNED TO PREVENT MOVEMENT OF HOT FLAME OR GASES.
13. SMOKE & FIRE DAMPERS MUST BE INSTALLED IN THE FOLLOWING LOCATIONS PE SECTIO 716.5; A–DUCT PENETRATIONS OF AREA OR OCCUPANCY SEPARATION PASSING THROUGH WALLS WITH RATINGS OF TWO HOURS OR LESS; B–DUCTS PASSING THROUGH HORIZONTAL EXIT WALLS; C–DUCTS PENETRATING SHAFTS; D–DUCTS PENETRATING FIRE–RESISTIVE ELEMENTS OF FIRE–RATED CORRIDOR WALLS. SEE MECHANICAL DRAWINGS FOR LOCATIONS.
14. PROVIDE ANTI–GRAFFITI FINISH AT THE FIRST 9 FEET, MEASURED FROM GRADE, AT EXTERIOR WALLS AND DOORS. (PAINTED SURFACE–LARR# 25601T, UNFINISHED SURFACE–LARR# 25286T)
15. PENETRATIONS IN FIRE–RESISTANT–RATED WALLS AND FLOORS SHALL COMPLY CBC SECTION 713.
16. RECESSED CEILING LIGHT FIXTURES MUST BE BOXED AROUND WITH 5/8" TYPE 'X' DRYWALL TO MAINTAIN THE 1–HOUR CEILING ASSEMBLY.
17. CONTINUOUS DRYWALL IS REQUIRED BEHIND ALL ELECTRICAL SERVICE PANELS, FIRE HOSES AND MEDICINE CABINETS.
18. EXHAUST FANS FROM THE BATHROOM MUST ENTER THROUGH THE WALL. DAMPERS ARE REQUIRED IF THE CEILING IS PENETRATED. (716.5)
19. PLUMBING PENETRATION THROUGH HORIZONTAL OCCUPANCY SEPARATIONS SHALL BE BOXED OUT AND FILLED WITH APPROVED SAFING MATERIAL. INSULATION IS NOT APPROVED. (716.6)
20. PENETRATION OF THE 1 HOUR CEILING BY DUCTS FROM THE FAU AND THE STOVE HOOD REQUIRE DAMPERS (USE A DUCTLESS HOOD WHENEVER POSSIBLE). ATTIC UNITS (INCLUDING HEAT PUMPS) REQUIRE DAMPERS AT ALL CEILING PENETRATIONS (716.6)
21. STEEL BEAMS AND COLUMNS SHALL BE PROTECTED AS REQUIRED FOR 1–HOUR PROTECTION. WHERE CEILING FORMS THE PROTECTIVE MEMBRANE FOR FIRE–RESISTIVE ASSEMBLIES (OCCUPANCY SEPARATIONS AND RATED ROOF/CEILING OR FLOOR/CEILING ASSEMBLIES), THE CONSTRUCTION (FLOOR JOISTS) AND THEIR SUPPORTING HORIZONTAL STRUCTURAL MEMBERS (BEAMS) NEED NOT BE INNDIVIDUALLY FIRE PROTECTED EXCEPT WHERE SUCH MEMBERS SUPPORT DIRECTLY APPLIED LOADS FROM MORE THAN ONE FLOOR OR ROOF. THE REQUIRED FIRE RESISTANCE SHALL NOT BE LESS THAN THAT REQUIRED FOR INDIVIDUAL PROTECTION OF MEMBERS. (704.3)
22. ALL PLUMBING PENETRATIONS THRU WALLS WHICH REQUIRE PROTECTED OPENINGS (FIRE WALLS, FIRE BARRIERS, FIRE PARTITIONS) ARE REQUIRED TO BE GALVANIZED OR CAST IRON PIPING.
23. ALL BUILDING AND FACILITY ENTRANCES THAT ARE ACCESSIBLE TO AND USABLE BY PERSONS WITH DISABILITIES AND AT EVERY MAJOR JUNCTION ALONG OR LEADING TO AN ACCESSIBLE ROUTE OF TRAVEL SHALL BE IDENTIFIED WITH A SIGN DISPLAYING THE INTERNATIONAL SYMBOL OF ACCESSIBILITY AND WITH ADDITIONAL DIRECTIONAL SIGNS TO BE VISIBLE TO PERSONS ALONG APPROACHING CIRCULATION PATHS. (1117B.5.8.1.2, 1127B.3)
24. THIS BUILDING IS OF TYPE V–A / III–A CONSTRUCTION, PROVIDE / SHOW:
   a. CONTINUOUS DRYWALL BEHIND ALL TUBS IS REQUIRED UNLESS THE WALLS ARE WITHIN THE UNIT AND NON–BEARING. BACK TO BACK TUBS WITH A COMMON PLUMBING WALL ARE IMPRACTICAL IN 1–HOUR BUILDINGS.
   b. ALL INTERIOR PARTITIONS SHALL BE CONSTRUCTED OF NOT LESS THAN 1–HOUR FIRE–RESISTIVE CONSTRUCTION.
   c. ATTIC ACCESS OPENINGS IN 1–HOUR CEILING CAN BE 2 LAYERS OF 3/4" PLYWOOD OR ONE LAYER OF 1–5/8" T&G MATERIAL, SELF–CLOSING.
   d. ALL OPENINGS IN FLOORS ARE REQUIRED TO BE ENCLOSED BY A SHAFT HAVING WALL, FLOOR, AND CEILING OF HOUR FIRE RESISTIVE CONSTRUCTION. 711.5
   e. RECESSED CEILING LIGHT FIXTURES MUST BE BOXED AROUND WITH 5/8" TYPE "X" DRYWALL TO MAINTAIN THE 1–HOUR CEILING ASSEMBLY.
   f. CONTINUOUS DRYWALL IS REQUIRED BEHIND ALL ELECTRICAL SERVICE PANELS, FIRE HOSES AND MEDICINE CABINETS.
   g. EXHAUST FANS FROM THE BATHROOM MUST ENTER THROUGH THE WALL. DAMPERS ARE REQUIRED IF THE CEILING IS PENETRATED.(717.5)
   h. PLUMBING PENETRATION THROUGH HORIZONTAL OCCUPANCY SEPARATIONS SHALL BE BOXED OUT AND FILLED WITH APPROVED SAFING MATERIAL. INSULATION IS NOT APPROVED. (714.4.1.1)
   i. PENETRATION OF THE 1 HOUR CEILING BY DUCTS FROM THE FAU AND THE STOVE HOOD REQUIRE DAMPERS (USE A DUCTLESS HOOD WHENEVER POSSIBLE). ATTIC UNITS (INCLUDING HEAT PUMPS) REQUIRE DAMPERS AT ALL CEILING PENETRATIONS. (717.6.1)
   j. STEEL BEAMS AND COLUMNS SHALL BE PROTECTED AS REQUIRED FOR 1–HOUR PROTECTION. WHERE CEILING FORMS THE PROTECTIVE MEMBRANE FOR FIRE–RESISTIVE ASSEMBLIES (OCCUPANCY SEPARATIONS AND RATED ROOF/CEILING OR FLOOR/CEILING ASSEMBLIES), THE CONSTRUCTION (FLOOR JOISTS) AND THEIR SUPPORTING HORIZONTAL STRUCTURAL MEMBERS (BEAMS) NEED NOT BE INDIVIDUALLY FIRE PROTECTED EXCEPT WHERE SUCH MEMBERS SUPPORT DIRECTLY APPLIED LOADS FROM MORE THAN ONE FLOOR OR ROOF. THE REQUIRED FIRE RESISTANCE SHALL NOT BE LESS THAN THAT REQUIRED FOR INDIVIDUAL PROTECTION OF MEMBERS.(704.3)
25. THIS BUILDING MUST BE EQUIPPED WITH AN AUTOMATIC FIRE EXTINGUISHING SYSTEM, COMPLYING WITH (NFPA–13/ NFPA–13R); THE SPRINKLER SYSTEM SHALL BE APPROVED BY PLUMBING DIV. PRIOR TO INSTALLATION. (903.2.7)

NOTE:
1. ALL STUD WALL, INTERIOR SIDE ONLY, SHALL BE PLAINED OR SHIMMED AS REQUIRED PRIOR TO DRYWALL INSTALLATION TO ASSURE A LEVEL SURFACE WITHOUT DIPS AND BOWS. DRYWALL SUBCONTRACTOR SHALL INSPECT AND APPROVE FRAMED PARTITIONS PRIOR TO INSTALLING DRYWALL WITH THE UNDERSTANDING THAT A LEVEL 5 FINISH IS REQUIRED. ALL DIPS AND BOWS OCCURRING AFTER DRYWALL IS INSTALLED, WILL BE REPAIRED AT THE CONTRACTOR'S OWN EXPENSE.
2. MAXIMUM CROSS SLOPE FOR WALKWAYS, HC DROP OFF AND RAMPS NOT EXCEED MORE THAN 2%.

FIRE DEPARTMENT GENERAL NOTES

1. PROVIDE APPROVED PANIC HARDWARE ON REQUIRED EXIT DOORS. TITLE 24, SECTION 1008.1.10.
2. THE INSPECTION, HYDROSTATIC TEST AND FLUSHING OF THE UNDERGROUND FIRE PROTECTION PIPING SHALL BE WITNESSED BY AN AUTHORIZED FIRE DEPARTMENT REPRESENTATIVE. NO UNDERGROUND PIPING OR THRUST BLOCKS SHALL BE COVERED BY EARTH OR HIDDEN FROM VIEW UNTIL THE FIRE DEPARTMENT REPRESENTATIVE HAS BEEN NOTIFIED AND GIVEN NOT LESS THAN 48 HOURS IN WHICH TO INSPECT SUCH INSTALLATIONS. FIRE CODE 901.5, COUNTY OF LOS ANGELES FIRE DEPARTMENT REGULATION 7.
3. ELEVATORS, ESCALATORS AND MOVING WALKS SHALL COMPLY WITH THE REQUIREMENTS SET FORTH IN BUILDING CODE CHAPTER 30.
4. WALLS AND SOFFITS WITHIN ENCLOSED USABLE SPACES UNDER ENCLOSED AND UNENCLOSED STAIRWAYS SHALL BE PROTECTED BY 1–HOUR FIRE–RESISTANCE–RATED CONSTRUCTION OF THE FIRE–RESISTANCE RATING OF THE STAIRWAY ENCLOSURE, WHICHEVER IS GREATER. BUILDING CODE 1009.6.3.
5. PORTABLE FIRE EXTINGUISHERS SHALL BE INSTALLED IN LOCATIONS AS REQUIRED BY FIRE CODE 906.
6. PROVIDE AN APPROVED FIRE ALARM SYSTEM PER TITLE 24, FIRE CODE 907.2.3.
7. THE FIRE SPRINKLER SYSTEM SHALL BE CALCULATED PER PAMPHLET #13.
8. A MANUAL FIRE ALARM SYSTEM SHALL BE INSTALLED IN GROUP A OCCUPANCIES HAVING AN OCCUPANT LOAD OF 300 OR MORE. BUILDING COD 907.2.1. SUBMIT PLANS TO THE FIRE ALARM PLAN CHECK UNIT FOR REVIEW AND APPROVAL PRIOR TO INSTALLATION. FIRE CODE 907.2.1.

SYMBOLS LEGEND

- X" — FINISH FLOOR ELEVATION CHANGE
- F.E. — SEMI–RECESSED FIRE EXTINGUISHERS SEE SPECIFICATIONS AND DETAIL 7/D5.0 8/D5.0
- 300A — DOOR NUMBER DOOR KEY SEE DOOR SCHEDULE A10.0
- X — WINDOW KEY SEE WINDOW SCHEDULE A10.1 WINDOW TYPE

WALL LEGEND

EXTERIOR WALLS 2 HOUR FIRE RATED

1. FURRING WALL @ CMU WALL–5/8" TYPE 'X' GYP ONE SIDE, EXTERIOR PLASTER TROWEL APPLIED. SEE DETAIL 1/D2.0 AND STRUCT'L DETAIL — EXT. SIDE
2. 2–HR EXTERIOR STUCCO WALL WITH R–19 INSULATION, EXTERIOR PLYWOOD, FIBERGLASS MAT GYP SHEATHING, EXTERIOR PLASTER TROWEL APPLIED, STRUCTURAL PLYWOOD, 2–LAYER GYP. BD INTERIOR SIDE; SEE DETAIL 4A/D2.0 5A/D2.0 AND STRUCT'L DETAIL — EXT. SIDE
3. 2–HR EXTERIOR STUCCO WALL WITH R–19 INSULATION, EXTERIOR PLYWOOD, FIBERGLASS MAT GYP SHEATHING, EXTERIOR PLASTER TROWEL APPLIED, 2–LAYER GYP. BD INTERIOR SIDE; SEE DETAIL 4/D2.0 5/D2.0 AND STRUCT'L DETAIL — EXT. SIDE
3A. SAME AS 3 EXCEPT WITH CERAMIC TILE INTERIOR SIDE. — EXT. SIDE 6/D2.0
4. 2–HR EXTERIOR STUCCO WALL @ NORTH CANOPY, SEE DETAIL 3/D2.0

INTERIOR WALLS 1 HOUR FIRE RATED PARTITIONS

6. 1–HR FIRE–RATED PARTITION/DEMISING SHEAR WALL WITH PLYWOOD ONE (CORRIDOR) SIDE. SEE DETAIL 8/D2.0 AND SEE STRUCT'L
6A. 1–HR FIRE–RATED PARTITION AT CORRIDOR WITH STRUCT. PLYWOOD AND 5/8" TYPE "X" GYP. BD. ONE SIDE (CORRIDOR) AND 5/8" WATER RESISTANT GYP. BD. ON RESTROOM/JANITOR SIDE, SEE DETAIL 8A/D2.0
6B. 1–HR FIRE–RATED PARTITION/DEMISING SHEAR WALL WITH PLYWOOD BOTH SIDES. SEE DETAIL 8B/D2.0 AND SEE STRUCT'L
7. 1–HR FIRE–RATED SHAFT WALL, SEE DETAIL 9/D2.0 AND STRUCTURAL

INTERIOR WALLS NON–RATED PARTITIONS

9. WOOD STUD DOUBLE PLUMBING WALL 5/8" TYPE X WATER RESISTANT GREEN GYP BD. EXPOSED SIDE, WITH SOUND INSULATION, SEE DETAIL 11/D2.0
10. STUD WALL AT WET AREA WITH 5/8" WATER RESISTANT GYP. BD. ON EXPOSED SIDE ONLY. SEE DET. 1/D3.0
10A. STUD WALL AT WET AREA WOOD STUD WALL FULL HEIGHT AND SOUND INSULATION WITH 5/8" WATER RESISTANT GYP. BD. BOTHE SIDES. SEE DETAIL 1A/D3.0
11. WOOD STUD WALL FULL HEIGHT WITH 5/8" GYP. BOARD BOTH SIDES WITH SOUND INSULATION. 10/D2.0

CONSTRUCTION PLAN NOTES

1. PROVIDE PRESSURE TREATED FLOOR SILL PLATE ON ALL BATHROOM WALLS, JANITOR'S CLOSET WALLS AND EXTERIOR PERIMETER WALLS ON GROUND FLOOR.
2. PROVIDE 3/4" FIRE TREATED PLYWOOD ON ALL WALLS IN MDF ROOM.
3. 1011.4 RAISED CHARACTER AND BRAILLE EXIT SIGNS. TACTILE EXIT SIGNS SHALL BE REQUIRED AT THE FOLLOWING LOCATIONS:
   1. EACH GRADE–LEVEL EXTERIOR EXIT DOOR THAT IS REQUIRED TO COMPLY WITH SECTION 1011.1, SHALL BE IDENTIFIED BY A TACTILE EXIT SIGN WITH THE WORD, "EXIT"
   2. EACH EXIT DOOR THAT IS REQUIRED TO COMPLY WITH SECTION 1011.1, AND THAT LEADS DIRECTLY TO A GRADE–LEVEL EXTERIOR EXIT BY MEANS OF A STAIRWAY OR RAMP SHALL BE IDENTIFIED BY A TACTILE EXIT SIGN WITH THE FOLLOWING WORDS AS APPROPRIATE:
      2.1. "EXIT STAIR DOWN"
      2.2. "EXIT RAMP DOWN"
      2.3. "EXIT STAIR UP"
      2.4. "EXIT RAMP UP"
   3. EACH EXIT DOOR THAT IS REQUIRED TO COMPLY WITH SECTION 1011.1, AND THAT LEADS DIRECTLY TO A GRADE–LEVEL EXTERIOR EXIT BY MEANS OF AN EXIT ENCLOSURE OR AN EXIT PASSAGEWAY SHALL BE IDENTIFIED BY A TACTILE EXIT SIGN WITH THE WORDS, "EXIT ROUTE."
   4. EACH EXIT ACCESS DOOR FROM AN INTERIOR ROOM OR AREA TO A CORRIDOR OR HALLWAY THAT IS REQUIRED TO COMPLY WITH SECTION 1011.1, SHALL BE IDENTIFIED BY A TACTILE EXIT SIGN WITH THE WORDS "EXIT ROUTE."
   5. EACH EXIT DOOR THROUGH A HORIZONTAL EXIT THAT IS REQUIRED TO COMPLY WITH SECTION 1011.1, SHALL BE IDENTIFIED BY A SIGN WITH THE WORDS, "TO EXIT" RAISED CHARACTER AND BRAILLE EXIT SIGNS SHALL COMPLY WITH SECTION 1117B.5.1 ITEM 1 SECTIONS 11B–703.1, 11B–703.2, 11B–703.3 AND 11B–703.5.
4. PROVIDE TACTILE STAIR LEVEL IDENTIFICATION SIGN THAT COMPLIES WITH 1022.9, AT EACH FLOOR LEVEL LANDING.
5. PROVIDE FIRE RATED MOTORIZED ROLL–UP DOOR W/ FUSIBLE LINK. SEE DOOR SCHEDULE.
6. ROOF DRAINS. FOR ROOF DRAINS/OVERFLOW DRAINS EXITING THE BUILDING, SEE DETAIL #5/D5.0.
7. PROPOSED LOCATION FOR FIRE SPRINKLER RISER/VALVE. PROVIDE ACCESS PANEL AS REQUIRED.
8. 6"X6" STEEL COLUMN WITH CLEAR FINISH
9. INTERIOR HYDRO–STATION DRINKING FOUNTAIN, SEE PLUMBING PLAN FOR ADDITIONAL INFORMATION
10. DRINKING FOUNTAIN ALCOVE. ALCOVE CEILING HEIGHT @ 7'–0" AFF. SEE DTL 5/A8.0. INSTALL CERAMIC TILES 4'–0" A.F.F. AT ALL WALLS OF ALCOVE.
11. PROVIDE WATER RESISTANT GYP ON JAN. CLOSET SIDE.
12. ALL RESTROOM FLOOR TO HAVE A 1/8" SLOPE TO FLOOR DRAIN. SEE PLUMBING ENG. DWGS. FOR FLOOR DRAIN LOCATIONS.
13. INSTALL SMOKE GUARD. SEE DETAIL 9/D5.0.
14. FOLDING WALL
15. PROVIDE DOOR BUZZER AND COMMUNICATION DEVICE WITH CONDUIT TO MAIN GATE ENTRANCE
16. SHAFT TO HAVE A 1–HR FIRE RATING. INSTALL (2) LAYERS OF 5/8" TYPE "X" GYP. BD. TO EXPOSED SIDE OF FRAMING. INSTALL TYPE "X" WATER RESISTANT GYP. BD. AT RESTROOM/JANITOR CLOSET SIDE. PROVIDE FIRE–RATED DAMPERS WHERE DUCTS PENETRATE THE FIRE–RATED WALLS. USE 1" TYPE S DRYWALL SCREWS 8" O.C. TO VERTICAL EDGES. SEE GA FILE NO: WP 1200.
17. FLOOR DRAIN, SEE PLUMBING PLAN
18. 45 MIN. GLAZING/DOOR

FRANCO ARCHITECTS INC.
12345 Ventura Blvd. H
Studio City, CA 91604
Tel 818 754-2030
Fax 818 754-2032
Architecture and Planning

MAGNOLIA SCIENCE ACADEMY
18220 SHERMAN WAY, RESEDA, CA91335

REV	DESCRIPTION	DATE
	PLAN CHECK #1	6/14/2017

LICENSED ARCHITECT
JOHANN D. WANG
C27010
4/30/2019
RENEWAL DATE
STATE OF CALIFORNIA

PROJECT
MAGNOLIA SCIENCE ACADEMY

PROJECT ADDRESS
18220 SHERMAN WAY,
RESEDA, CA91335

DRAWING TITLE
SECOND FLOOR CONSTRUCTION PLAN

DRAWN BY
ISSUE DATE 6/14/2017
JOB NUMBER
DRAWING SCALE AS NOTED
APPROVED BY:

DRAWING NUMBER
A2.1

SECOND REFLECTED CEILING PLAN

SCALE: 1/8" = 1'-0"

GENERAL NOTES

1. REFER TO ENGINEERED DWGS FOR CIRCUITING & EXACT FIXTURE OUTLET & SPECS. ALL LIGHT SWITCHES TO BE CIRCUITED & INSTALLED TO COMPLY WITH LOCAL CODES, A.D.A. TITLE 24 & APPLICABLE STATE ENERGY REQ'MTS.
2. SPECIFICATIONS & ILLUSTRATIONS OF MECHANICAL & ELECTRICAL DEVICES SPECIFIED BY THE MECHANICAL AND ELECTRICAL ENGINEERS SHALL BE SUBMITTED TO FRANCO & ASSOCIATES FOR APPROVAL STAMP PRIOR TO PURCHASE.
3. MECHANICAL & ELECTRICAL ENGINEERED DWGS ARE NOT INTENDED TO SHOW EXACT LOCATIONS OF FIXTURES, OUTLETS, OR EQUIPMENT: REFER TO ARCHITECTURAL DWGS.
4. LIGHT FIXTURES SHALL BE LOCATED EXACTLY AS NOTED. CONTRACTOR SHALL FIELD CHECK ELECTRICIAN'S LAYOUT OF LIGHT FIXTURES PRIOR TO FINAL CONNECTIONS.
5. ALL DUCTWORK, DIFFUSERS, EXHAUST FANS & OTHER MECHANICAL DEVICES AND EQUIPMENT ABOVE OR PENETRATING THE CLG. SHALL BE LOCATED IN COORDINATION WITH THE LIGHT FIXTURE LAYOUT.
6. CONTRACTOR SHALL INCLUDE ACCESS PANELS IN BID. MECH. & ELECT. SUBS SHALL ESTIMATE QUANTITY REQ'D BASED ON DRYWALL CLG. LOCATIONS ON PLANS. ALL ACCESS PANELS SHALL BE FRAMELESS W/CONCEALED HINGES.
7. CONTRACTOR'S SUPER SHALL SCHEDULE A JOB SITE MEETING WITH BOTH BLDG. & FIRE INSPECTORS FOR PRELIMINARY APPROVAL OF ALL MECH. & ELECT. PANELS, LIFE SAFETY SPEAKER, STROBE & SMOKE DETECTOR LOCATIONS TWO (2) DAYS PRIOR TO ROUGH-OUT INSTALL. ADVISE ARCHITECT OF ANY ADDITIONS OR RELOCATIONS REQUIRED BY INSPECTORS PRIOR TO PROCEEDING WITH WORK.
8. WHERE CEILINGS ARE SPECIFIED TO BE FIRE-RATED CONSTRUCTION, ALL RECESSED LIGHT FIXTURES & SPEAKERS SHALL BE BOXED OUT ABOVE THE CEILING WITH FIRE-RATED ENCLOSURE EQUAL TO THE RATING OF THE CEILING.
9. PROVIDE SEISMIC CEILING GRID BRACING AS REQUIRED BY LOCAL CODES.
10. SWITCHES & MOTION SENSORS (IF ANY) SHALL BE INSTALLED AT 42" A.F.F. TO CENTER AND AT 6" OFF DOOR JAMBS OR SIDELIGHTS, U.O.N.
11. ANY TIME THE BUILDING OR A PORTION OF THE BUILDING IS OCCUPIED, THE MEANS OF EGRESS SERVING THE OCCUPIED PORTION SHALL BE ILLUMINATED AT AN INTENSITY OF NOT LESS THAN 1-FOOT-CANDLE (11 LUX) AT THE WALKING SURFACE LEVEL.
12. THE POWER SUPPLY FOR THE MEANS OF EGRESS ILLUMINATION SHALL BE PROVIDED BY THE PREMISE'S ELECTRICAL SUPPLY. IN THE EVENT OF POWER SUPPLY FAILURE, ILLUMINATION SHALL BE AUTOMATICALLY PROVIDED FROM AN EMERGENCY SYSTEM FOR THE FOLLOWING AREAS:
    a. AISLES AND UNENCLOSED EGRESS STAIRWAYS IN ROOMS AND SPACES THAT REQUIRE TWO OR MORE MEANS OF EGRESS.
    b. CORRIDORS, EXIT ENCLOSURES AND EXIT PASSAGEWAYS IN BUILDINGS REQUIRED TO HAVE TWO OR MORE EXITS.
    c. EXTERIOR EGRESS COMPONENTS AT OTHER THAN THE LEVEL OF EXIT DISCHARGE UNTIL EXIT DISCHARGE IS ACCOMPLISHED FOR BUILDINGS TO HAVE TWO OR MORE EXITS.
    d. INTERIOR EXIT DISCHARGE ELEMENTS, AS PERMITTED IN SECTION 1027.1, IN BUILDINGS REQUIRED TO HAVE TWO OR MORE EXITS.
    e. EXTERIOR LANDINGS, AS REQUIRED BY SECTION 1008.1.6, FOR EXIT DISCHARGE DOORWAYS IN BUILDING REQUIRED TO HAVE TWO OR MORE EXITS.
13. EXIT SIGNS SHALL BE INTERNALLY OR EXTERNALLY ILLUMINATED WHEN THE FACE OF AN EXIT SIGN IS ILLUMINATED FROM AN EXTERNAL SOURCE, IT SHALL HAVE AN INTENSITY OF NOT LESS THAN 5-FOOT CANDLE FROM EITHER OF THE TWO ELECTRIC LAMPS. INTERNALLY ILLUMINATED SIGNS SHALL PROVIDE EQUIVALENT LUMINANCE AND BE LISTED FOR THE PURPOSE.
14. PLENUM RATED WIRING TO BE PROVIDED. SEE ELECTRICAL PLANS.
15. PROVIDE EXIT SIGNS AND DIRECTIONAL EXIT SIGNS WITH MINIMUM 6" HIGH BY 3/4" STROKE BLOCK LETTER ON A CONTRASTING BACKGROUND. SPACING BETWEEN SIGNS SHALL NOT EXCEED 100 FEET.
16. UNDERSIDE OF EXIT SIGNS MUST BE 7'-0" CLEAR.
17. THE EXIT SIGNS SHALL BE CONNECTED TO AN EMERGENCY ELECTRICAL SYSTEM WHICH IS TO PROVIDE CONTINUED ILLUMINATION FOR A DURATION OF NOT LESS THAN 1-1/2 HOUR IN CASE OF PRIMARY POWER LOSS. CONTINUED ILLUMINATION IS TO BE PROVIDED FROM STORAGE BATTERIES, UNIT EQUIPMENT, OR AN ON-SITE GENERATOR AND THE INSTALLATION OF THE EMERGENCY POWER SYSTEM SHALL BE INSTALLED IN ACCORDANCE WITH CHAPTER 27.
18. EMERGENCY LIGHTING FACILITIES SHALL BE ARRANGED TO PROVIDE INITIAL ILLUMINATION THAT IS AT LEAST AN AVERAGE ON 1-FOOT-CANDLE (11 LUX) AN A MINIMUM AT ANY POINT OF 0.1-FOOT-CANDLE (1 LUX) MEASURED ALONG THE PATH OF EGRESS AT FLOOR LEVEL. A MAXIMUM-TO-MINIMUM ILLUMINATION UNIFORMITY RATIO OF 40 TO 1 SHALL NOT BE EXCEEDED.
19. INTERNALLY ILLUMINATED SIGNS SHALL BE LISTED AND LABELED AND SHALL BE INSTALLED IN ACCORDANCE WITH THE MANUFACTURER'S INSTRUCTIONS AND SECTION 2702.
20. EXIT SIGNS SHALL BE ILLUMINATED AT ALL TIMES.
21. EGRESS DOORS SHALL BE READILY OPENABLE FROM THE EGRESS SIDE WITHOUT THE USE OF A KEY OR SPECIAL KNOWLEDGE OR EFFORT. SEE 1008.1.9.3 FOR EXCEPTIONS.
22. DOOR HANDLES LOCK AND OTHER OPERATNG DEVICES SHALL BE INSTALLED AT A MIN. 34" AND MAX. 48" ABOVE THE FINISHED FLOOR.
23. EXIT DOORS SHALL REMAIN UNLOCKED WHEN BUILDING IS OCCUPIED.
24. ALL EGRESS DOOR OPERATION SHALL ALSO COMPLY WITH SECTION 1008.1.9 – 1008.1.9.8
25. THE MEANS OF EGRESS, INCLUDING THE EXIT DISCHARGE, SHALL BE ILLUMINATED AT ALL TIMES THE BUILDING SPACE SERVED BY THE MEANS OF EGRESS IS OCCUPIED.
26. THE MEANS OF EGRESS ILLUMINATION LEVEL SHALL NOT BE LESS THAN 1 FOOT-CANDLE AT THE WALKING SURFACE.
27. THE EMERGENCY POWER SYSTEM SHALL PROVIDE POWER FOR A DURATION OF NOT LESS THAN 90 MINUTES AND SHALL CONSIST OF STORAGE BATTERIES, UNIT EQUIPMENT OR AN ON-SITE GENERATOR. THE INSTALLATION OF THE EMERGENCY POWER SYSTEM SHALL BE IN ACCORDANCE WITH SECTION 2702.

LEGEND

NEW 2'x4' GRID SEE DETAILS (1 D4.0) (2 D4.0) (3 D4.0) (4 D4.0) (5 D4.0)
TILES:
FINE FISSURED HIGH NRC/CAC

NEW GYP. BD. SOFFIT OR CEILING
REFER TO PLAN FOR CEILING HEIGHTS. SEE DET. (6 D4.0)

48" x 96" SKYLIGHT; DUAL WALL, WHITE ACRYLIC DOME SKYLIGHT (LARR #2708)

(X'-X") FINISH CEILING HEIGHT (EX.) EXISTING PLASTER CLG. (VIF.)

EXHAUST DUCT, REFER TO MECHANICAL DWGS.
RETURN DUCT, REFER TO MECHANICAL DWGS.
SUPPLY DUCT, REFER TO MECHANICAL DWGS.

FIXTURE SYMBOLS

L — ISOLIT ELT SERIES CLEAR W/ WHITE TRIM & GREEN LETTERS EXIT LIGHT PER ELEC. PLANS COMPLIANCE WITH BLDG. CODE SEC. 1003.2.8.1. SURFACE MTD.; (L) SELF-ILLUMINATED LOW LEVEL EXIT SIGN PROVIDED CONJUNCTION WITH EXIT SIGNAGE PACKAGE (WHERE SHOWN)

INTERNALLY ILLUMINATED FLOOR LEVEL EXIT SIGN PROVIDED IN ALL INTERIOR CORRIDORS (1011.6)

A — 2'x4' RECESSED LED LIGHT FIXTURE; BY COOPER LIGHTING EATON
24AC-LD4-44-UNV-L840

B — 13"x4' SURFACE MOUNTED LED LIGHT FIXTURE; BY LAMAR LIGHTING
VGAL SERIES- 48-L-40

C — 6-INCH RECESSED LED FIXTURE; BY COOPER LIGHTING EATON
HALO COMMERCIAL- PD6-30-D010-PDM6A-835-61V-C

D — 8"x4' SURFACE MOUNTED LED LIGHT FIXTURE; BY COOPER LIGHTING EATON
4-LED4-40SL-F-UNV-L835-CD-1-U

E-X — 4"x8' SURFACE MOUNT LED LIGHT FIXTURE; BY FOCAL POINT
SEEM 4 LED: FSM4LS-FL-625LF-1C-UNV-LD1-SM-WH-8'

4"x4' SURFACE MOUNT LED LIGHT FIXTURE; BY FOCAL POINT
SEEM 4 LED: FSM4LS-FL-625LF-1C-UNV-LD1-SM-WH-4'

F-X — 2'- SURFACE MOUTED LED LIGHT FIXTURE; BY FORUM
SAD-34-30-SAT-S-2'-120V-WH
4'- SURFACE MOUTED LED LIGHT FIXTURE; BY FORUM
SAD-34-30-SAT-S-4'-120V-WH

H-4' — 7"x4' WALL MOUNT LED LIGHT FIXTURE; BY FOCAL POINT
VERVE IV LED- FV4LW-FL-625LF-1C-UNV-LD1-WM-WH-4'

EXT A — LED WALL MOUNTED LIGHT; BY SHARPER LIGHTING
674-WP SERIES- 674-31"-WP-L3/830- ALP

EXT B — LED SURFACE MOUNTED LIGHT; BY PRESCOLITE
AEW8093-L14.3W-PT22-120-277V-40K

EXT C — 6-INCH RECESSED LED FIXTURE; BY COOPER LIGHTING EATON
HALO COMMERCIAL- PD6-30-D010-PDM6A-835-61V-C

EXT D — LED RECESSED STEP LIGHT; BY LBL LIGHTING
BL94405- WH-LED930-W

EXT E — EXTERIOR POLE MOUNTED FIXTURE WITH 1-HEAD; BY DECO LIGHTING
D824-LED-30/28W-50-UNV-LP-T5-PM-SL
EXTERIOR POLE FOR FIXTURE WITH 1-HEAD; BY DECO LIGHTING
DP4S-S-12-DM1-SLV

EXT F — LED WALL MOUNTED LIGHT; BY WAC LIGHTING
WP-LED335-50-WT

REFLECTED CEILING PLAN NOTES

1. (2) LAYERS OF 5/8" GYP. BD. APPLIED TO UNDERSIDE OF FRAMING. 1 HOUR FIRE RATING REF. GA FILE NO. FC 5513 AT 1ST FLOOR AND FC 5407 AT ROOF. PAINT EXPOSED GYP. BD. FACE WHICH IS ATTACHED TO THE UNDERSIDE OF FRAMING ABOVE. SEE SHEET "A1.5" FOR PAINT COLOR.
2. DRYWALL SOFFIT AT +8'-0" AFF. WITH RECESSED ROLL-DOWN DOOR. SEE DETAIL (1 D5.0)
3. NOT USED
4. PROVIDE GYP. BD. HEADER AT 10'-0"AFF. SEE SHEET "A1.5" FOR PAINT COLOR.
5. GYP. CLG.
6. STUCCO CANOPY SOFFIT
6A. METAL PANEL, SEE SECTION 1/A5.4
7. DRINKING FOUNTAIN ALCOVE. ALCOVE TO HAVE A SUSPENDED GYP. BD. CEILING AT 7'-0" AFF. SEE DETAIL (5 A8.0)
8. EXPOSED, NO CEILING

FIRE DEPARTMENT GENERAL NOTES

1. THE MEANS OF EGRESS, AND EXIT DISCHARGE, SHALL BE ILLUMINATED AT ANY TIME THE BUILDING IS OCCUPIED WITH A LIGHT INTENSITY OF NOT LESS THAN 1 FOOT-CANDLE AT THE WALKING SURFACE LEVEL. BUILDING CODE 1006.2.
2. EXITS, EXIT ACCESS DOORS AND PATHS OF EGRESS TRAVEL THAT IS NOT IMMEDIATELY VISIBLE TO THE OCCUPANTS SHALL BE MARKED BY AN APPROVED EXIT SIGN THAT IS READILY VISIBLE FROM ANY DIRECTION OF EGRESS TRAVEL. EXIT SIGNS SHALL BE INTERNALLY OR EXTERNALLY ILLUMINATED. BUILDING CODE 1011.
   NOTE: ADDITIONAL EXIT SIGNS MAY BE REQUIRED AT TIME OF FIELD INSPECTION.
3. PROVIDE LOW-LEVEL EXIT SIGNS PER TITLE 24, 1011.6.
4. EVERY ROOM OR SPACE THAT IS AN ASSEMBLY OCCUPANCY SHALL HAVE THE OCCUPANT LOAD OF THE ROOM OR SPACE POSTED IN A CONSPICUOUS PLACE, NEAR THE MAIN EXIT OR EXIT ACCESS DOORWAY FROM THE ROOM OR SPACE. POSTED SIGNS SHALL BE OF AN APPROVED LEGIBLE PERMANENT DESIGN AND SHALL BE MAINTAINED BY THE OWNER OR AUTHORIZED AGENT. BUILDING CODE 1004.3. FIRE CODE 1004.3.
5. WHERE EXIT SIGNS ARE REQUIRED, ADDITIONAL APPROVED FLOOR-LEVEL EXIT SIGNS WHICH ARE INTERNALLY OR EXTERNALLY ILLUMINATED, PHOTO LUMINESCENT OR SELF-LUMINOUS SHALL BE PROVIDED IN ALL INTERIOR CORRIDORS. BUILDING CODE 1011.6. FIRE CODE 1011.6.

FRANCO ARCHITECTS INC.
12345 Ventura Blvd. H
Studio City, CA 91604
Tel 818 754-2030
Fax 818 754-2032
Architecture and Planning

MAGNOLIA SCIENCE ACADEMY
18220 SHERMAN WAY, RESEDA, CA91335

REV	DESCRIPTION	DATE
	PLAN CHECK #1	6/14/2017

LICENSED ARCHITECT
JOHANN D. WIENER
C27010
4/30/2019
RENEWAL DATE
STATE OF CALIFORNIA

PROJECT: MAGNOLIA SCIENCE ACADEMY
PROJECT ADDRESS: 18220 SHERMAN WAY, RESEDA, CA91335
DRAWING TITLE: SECOND FLOOR REFLECTED CEILING PLAN
DRAWN BY:
ISSUE DATE: 6/14/2017
JOB NUMBER:
DRAWING SCALE: AS NOTED
APPROVED BY:
DRAWING NUMBER: A2.2

SECOND FLOOR POWER & SIGNAL PLAN

SCALE: 1/8" = 1'-0"

GENERAL NOTES

1. REFER TO ENGINEERED DWGS. FOR ELECTRICAL CIRCUITING. ALL ELECTRICAL DEVICES TO BE CIRCUITED AND INSTALLED TO COMPLY W/ LOCAL CODES A.D.A. TITLE III AND APPLICABLE STATE ENERGY REQUIREMENTS.
2. SPECS. & ILLUSTRATIONS OF ELECT. DEVICES SPECIFIED BY THE ELECT. ENGINEERS SHALL BE SUBMITTED TO ARCHITECT FOR REVIEW & APPROVAL STAMP PRIOR TO PURCHASE OF MATERIALS & COMMENCEMENT OF WORK.
3. REFER TO ENGINEERED DWGS. FOR CIRCUITING & SPECS. TO SPECIFY EXACT LOCATIONS OF FIXTURES, OUTLETS, OR EQUIPMENT: REFER TO ARCHITECT DWGS. IF NO DIMENSIONS ARE NOTED, CONTRACTOR SHALL SCALE LOCATIONS OFF DWGS. & INSTALL ACCORDINGLY. ANY DISCREPANCIES BETWEEN NOTED DIMENSIONS AND FIELD CONDITIONS SHALL BE REPORTED TO ARCHITECT IMMEDIATELY, PRIOR TO INSTALLATION.
4. CONTRACTOR SHALL FIELD VERIFY LOCATIONS OF ALL SWITCHES, OUTLETS & DEVICES PRIOR TO DRYWALL INSTALL.
5. ALL STD. COVERPLATES & DEVICES SHALL BE LEVITON DECORA SERIES U.O.N. EXCEPTION: EQUIPMENT REQUIRING NON-STANDARD RECEPTACLES.
6. ALL STD. POWER & SIGNAL COVERPLATES, SWITCHES & DEVICE FINISHES SHALL BE WHITE U.O.N. WHERE INDICATED, CLEAN (ISOLATED) ELECTRICAL POWER TO BE DISTINGUISHED BY A GRAY RECEPTACLE. SEPARATE CIRCUITS TO BE DISTINGUISHED BY AN ORANGE RECEPTACLE.
7. ALL WALL MTD. SIGNAL OUTLETS SHALL HAVE A J-BOX. COMMUNICATIONS & DATA SHALL PROVIDE COVERPLATES FOR ALL SIGNAL OUTLETS. CONTRACTOR SHALL PROVIDE COVERPLATES FOR ALL ELECTRICAL OUTLETS & SWITCHES.
8. ALL CONDUIT AT WALL & FLOOR MOUNTED SIGNAL OUTLETS SHALL RECEIVE PULL WIRES INSTALLED BY THE CONTRACTOR.
9. DO NOT INSTALL OUTLETS EITHER BACK TO BACK OR SIDE BY SIDE ON OPPOSITE SIDES OF SAME WALL EXCEPT WHERE SPECIFICALLY DIMENSIONED. SEPARATE ALL SUCH OUTLETS W/ONE STUD.
10. ALL OUTLETS, SWITCHES & J-BOXES LOCATED IN ACOUSTICAL PARTITIONS SHALL RECEIVE BACKING EQUIVALENT TO "LOWRIES ELECTRICAL PADS."
11. WHERE WALL MOUNTED OUTLETS ARE INDICATED SIDE BY SIDE, THE MAX. SEPARATION BETWEEN SUCH OUTLETS SHALL BE 6" CEN. TO CEN. U.O.N.
12. ALL WALL TEL. & ELECT. OUTLETS SHALL BE INSTALLED FROM BOTTOM OF RECEPTACLE BOX OR RECEPTACLE HOUSING TO 15" AFF. U.O.N. OUTLETS INSTALLED ABOVE MILLWORK TO BE INSTALLED VERTICALLY U.O.N. SEE 11/A0.3
13. ALL SWITCHES SHALL BE GANG PLATED, WHERE APPLICABLE.
14. SWITCHES & MOTION SENSORS (IF ANY) SHALL BE INSTALLED @ 42" A.F.F. TO CENTER AND AT 6" OFF DOOR JAMBS, U.O.N.
15. MOUNT SWITCHES & OUTLETS FORWARD TO FACE OF FINISHED BACK WALL LOCATIONS OF TILES, WALLS AND SPLASH. REFER TO FINISH AND/OR CABINET PLANS FOR LOCATIONS.
16. ALL ELECTRICAL ITEMS NOTED FOR INSTALL. IN CABINET WORK SHALL BE SUPPLIED, INSTALLED AND COORDINATED BY THE CONTRACTOR, U.O.N.
17. COORDINATE, BID, FURNISH & INSTALL ALL CONDUIT RUNS, CONDUIT SLEEVES AND PLYWOOD BACKBOARD. COORDINATE WITH CLIENT AND/OR CLIENT'S COMMUNICATIONS & DATA VENDORS TO CONFIRM REQUIREMENTS.
18. COORDINATE, BID, FURNISH & INSTALL ALL SECURITY DEVICE J-BOXES, CONDUIT SLEEVES AND PLYWOOD BACKBOARDS. COORDINATE WITH CLIENT'S COMMUNICATIONS & DATA VENDORS TO CONFIRM REQUIREMENTS.
19. FIRE ALARM SYSTEM:
    A. NEW FIRE/LIFE SAFETY SYSTEM TO CONFORM TO CURRENT REQUIREMENTS. SYSTEM SHALL BE LEFT IN FIRST CLASS OPERATING CONDITION. COMPATIBLE W/ AND INTEGRATED INTO THE BLDG. ALARM CONTROL SYSTEM.
    B. FIRE ALARM SYSTEM SHALL CONSIST OF SMOKE DETECTORS, AUDIBLE & VISUAL (STROBE) ALARMS, AND MANUAL FIRE ALARM PULL STATIONS AS REQ'D BY STATE FIRE MARSHALL.
    C. SUBMIT DESIGN SPECS. AND DRAWINGS FOR ARCHITECT COORDINATION WITH ARCHITECTURAL DRAWINGS AND APPROVAL PRIOR TO PERMIT SUBMITTAL.
    D. PROVIDE AN APPROVED FIRE ALARM SYSTEM. SUBMIT PLANS TO AREA PRIOR TO INSTALLATION PER TITLE 24, 305.9 & FIRE CODE 1007.2.4.
20. ALL OPEN WIRING IN PLENUM AREAS TO BE PLENUM RATED.
21. PROVIDE DATA CONDUIT PER ELECTRICAL PLANS & PLANS PROVIDED BY THE OWNERS DATA VENDOR AS NOTED BUT NOT LIMITED TO THE FOLLOWING:
    PROVIDE CONDUIT TO OWNER PROVIDED WIRELESS ANTENNA.
    PROVIDE CONDUIT HOMERUN FROM DATA DROPS TO COMM. DATA ROOM

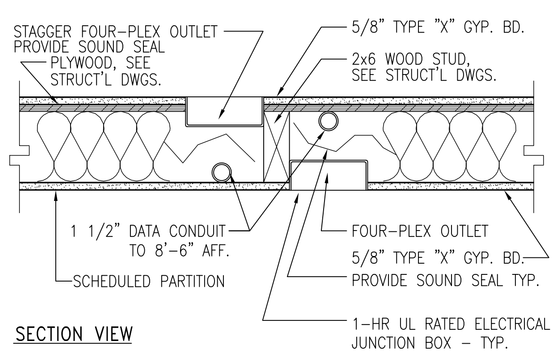

SECTION VIEW

TYPICAL ELECTRICAL JUNCTION BOX & CONDUIT AT 1-HR WALL

LEGEND

- FLOOR FLUSH MOUNTED DATA
- FLOOR FLUSH MOUNTED POWER OUTLET
- WALL MOUNTED FOURPLEX OUTLET
- WALL MOUNTED DUPLEX OUTLET
- WALL MOUNTED DEDICATED 220 CIRCUIT OUTLET
- CEILING MOUNTED DUPLEX OUTLET
- DEDICATED OUTLETS. SEE ELECTRICAL
- WATERPROOFED WALL MOUNTED DUPLEX OUTLET
- WALL MOUNTED DATA/VOICE - (1) DATA, (1) VOICE
- WALL MOUNTED PHONE OUTLET - (1) VOICE
- J — J-BOX
- GFI — GFI- GROUNDED OUTLET
- X" — X" ABOVE FINISHED FLOOR
- SC — SEPARATE CIRCUIT
- DZ — DOOR BUZZER
- WP — WIRELESS ACCESS POINTS PROVIDED BY OWNER'S DATA VENDOR
- QUAD RECEPTACLE W/ 2 DEDICATED OUTLETS
- J — 1) JUNCTION BOX FOR ELECTRICAL POWERED HAND DRYER, 20A CIRCUIT; DRYER SHALL BE AMERICAN DRYER INC. EXTREMEAIR EXT7-SS.

POWER AND SIGNAL PLAN NOTES

1. IN ALL THE CLASSROOMS, AT EACH FOURPLEX OUTLETS PROVIDE A 1-1/2" CONDUIT FOR DATA.
2. IN ALL THE CLASSROOMS, PROVIDE A DEDICATED CIRCUIT FOR EVERY TWO FOURPLEX OUTLETS.
3. MDF ROOM: PROVIDE 3/4" FIRE TREATED PLYWOOD ON ALL WALLS; PROVIDE (2) DEDICATED 20A DUPLEX RECEPTACLES, EACH ON A SEPARATE CIRCUIT. A DEDICATED 1.5 TON AC UNIT TO BE PROVIDED FOR THIS ROOM. CONTRACTOR TO COORDINATE AND CONFIRM ELECTRICAL REQUIREMENTS WITH CLIENT'S IT PROVIDER.
4. PROVIDE POWER FOR FIRE RATED MOTORIZED ROLL-DOWN COUNTER DOOR PER MANUFACTURER'S RECOMMENDATIONS. SEE COOKSEN MOTOR-OPERATED COUNTER DOOR (OR EQUAL), COLORCOTE FINISH; BETWEEN JAMB MOUNTED; FEATHEREDGE. SEE 1/D5.0
5. LOCATE FIRE ALARM CONTROL PANEL IN ELECTRICAL ROOM
6. PROVIDE LOCKABLE COVER PLATES FOR ALL EXTERIOR OUTLETS.
7. PROVIDE POWER FOR INSTA-HOT WATER HEATER AND GARBAGE DISPOSAL. REFER TO PLUMBING PLANS FOR SPECIFICATION.
8. ELECTRIC POWERED HAND DRYER.
9. NOT USED
10. PROVIDE POWER FOR INTERIOR DRINKING FOUNTAIN. REFER TO PLUMBING ENGINEERING DWGS. FOR SPECS.
11. PROVIDE DEDICATED ELECTRICAL OUTLET FOR COPIER.
12. PROVIDE POWER/CONNECTION FOR HOT WATER HEATER WITHIN JANITOR'S CLOSET. REFER TO PLUMBING ENGINEERING DWGS. FOR SPECS.

CA GREEN CODE NOTES

1. PRIOR TO PERMIT BEING FINALED, A COMPLETE REPORT OF THE TESTING AND ADJUSTING SHALL BE PROVIDED TO THE OWNER OR OWNER'S REPRESENTATIVE AND FORM 5.410 - TESTING AND ADJUSTING SHALL BE COMPLETED AND PROVIDED TO THE INSPECTOR. (CAL GREEN 5.410.4)
2. PRIOR TO PERMIT BEING FINALED, A COMPLETE REPORT OF THE COMMISSIONING PROCESS SHALL BE PROVIDED TO THE OWNER OR OWNER'S REPRESENTATIVE AND FORM 5.410 - VERIFICATION SHALL BE COMPLETED AND PROVIDED TO THE INSPECTOR. (CAL GREEN 5.410.2)
3. BUILDING MUST COMPLY WITH THE STATE'S 2008 MANDATORY ENERGY EFFICIENCY STANDARDS. SUBMIT TO MECHANICAL SECTION AND THE ELECTRICAL SECTION FOR REVIEW AND APPROVAL OF ENERGY EFFICIENCY COMPLIANCE. (5.201.1)

FIRE DEPARTMENT GENERAL NOTES

1. THE POWER SUPPLY FOR MEANS OF EGRESS ILLUMINATION SHALL NORMALLY BE PROVIDED BY THE PREMISES ELECTRICAL SUPPLY. IN THE EVENT OF POWER SUPPLY FAILURE, THE EMERGENCY POWER SYSTEM SHALL PROVIDE POWER FOR A DURATION OF NOT LESS THAN 90 MINUTES AND SHALL CONSIST OF STORAGE BATTERIES, UNIT EQUIPMENT OR AN ON-SITE GENERATOR. BUILDING CODE 1006.3

FRANCO ARCHITECTS INC.
12345 Ventura Blvd. H
Studio City, CA 91604
Tel 818 754-2030
Fax 818 754-2032
Architecture and Planning

MAGNOLIA SCIENCE ACADEMY
18220 SHERMAN WAY, RESEDA, CA91335

REV	DESCRIPTION	DATE
	PLAN CHECK #1	6/14/2017

LICENSED ARCHITECT
JOHANN D. WANG
C27010
4/30/2019
RENEWAL DATE
STATE OF CALIFORNIA

PROJECT
MAGNOLIA SCIENCE ACADEMY

PROJECT ADDRESS
18220 SHERMAN WAY, RESEDA, CA91335

DRAWING TITLE
SECOND FLOOR POWER & SIGNAL PLAN

DRAWN BY
ISSUE DATE 6/14/2017

JOB NUMBER
DRAWING SCALE AS NOTED

APPROVED BY:

DRAWING NUMBER
A2.3

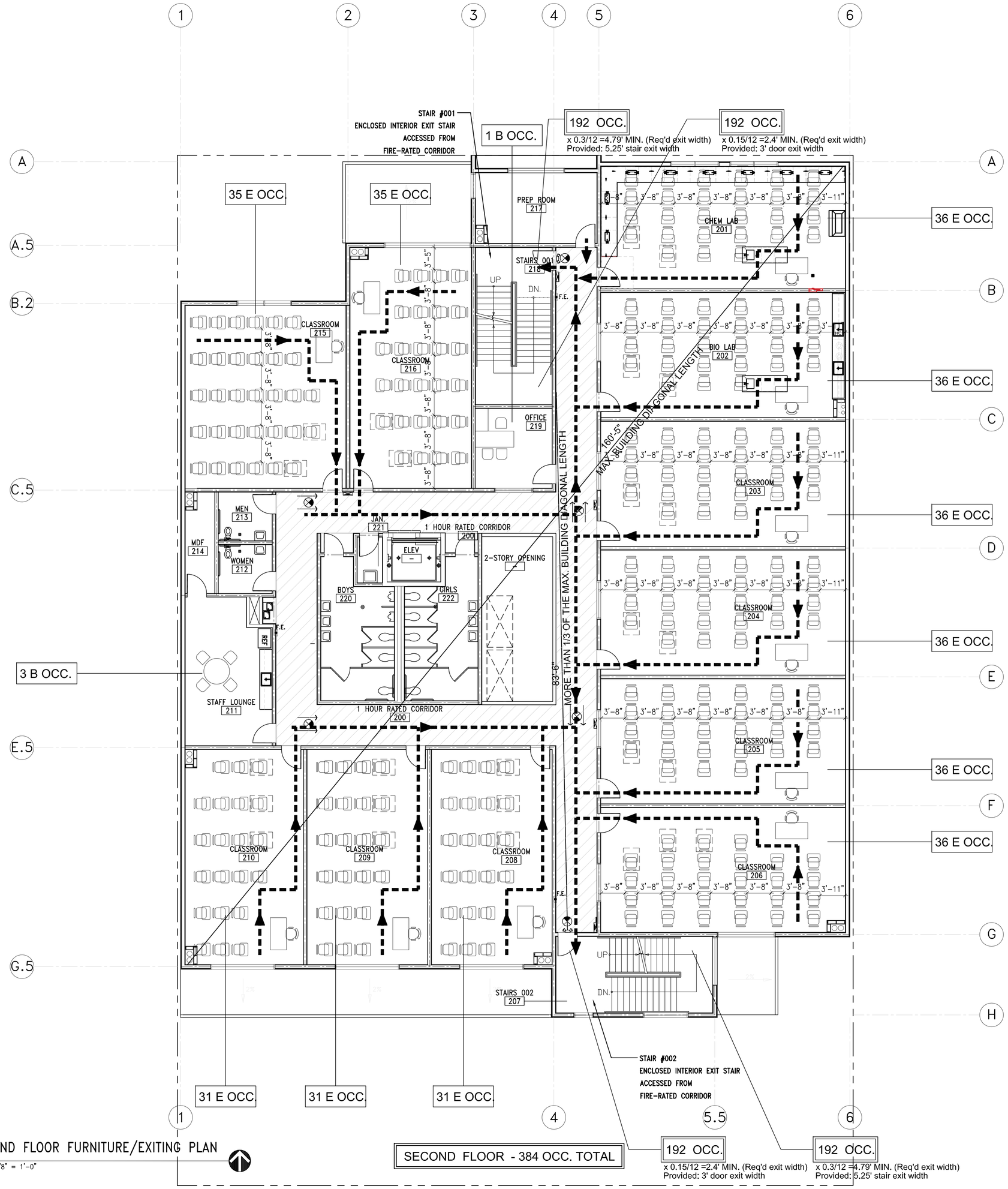

SECOND FLOOR FURNITURE/EXITING PLAN

SCALE: 1/8" = 1'-0"

FURNITURE PLAN LEGEND

LEGEND

48" 30" — 30"x48" HC ACCESS MINIMUM KNEE CLEARANCE 27"H X 30"W X 11"D

WB WB — (2) 4'H. X 6'W. WHITEBOARDS SUPPLIED AND INSTALLED BY GENERAL CONTRACTOR

WHITEBOARD SPECIFICATION:
MANUFACTURER: ABC SCHOOL EQUIPMENT. INC. OR EQUAL
SIZE: 4' H. X 6' W.
COLOR: 454 BRIGHT WHITE

FURNITURE PLAN NOTES

1. FURNITURE TO BE SUPPLIED AND INSTALLED BY TENANT.
2. SEE SHEET A0.3 FOR ADA REQUIREMENTS REGARDING "SPACE ALLOWANCE AND REACH RANGES."

FURNITURE PLAN – GENERAL NOTES

1. VENDING MACHINES SHALL BE INSTALLED IN COMPLIANCE WITH SECTIONS 11B-206, 11B-305, 11B-308 AND 11B-309.
2. UNLESS AN ATTENDANT IS AVAILABLE TO ASSIST PERSONS WITH DISABILITIES, ALL BOOK SHELVING SHALL BE LOCATED NOT MORE THAN 54" ABOVE THE FLOOR.
3. THE TOP OF THE TABLES AND COUNTERS SHALL BE 28" TO 34" FROM THE FLOOR OR GROUND.
4. GC TO PROVIDE WHITEBOARDS. SEE SPECIFICATION.
5. A MINIMUM KNEE CLEARANCE OF 27"H X 30"W X 19"D SHALL BE PROVIDED AT ALL DESKS AND TABLETOPS.
6. NOTE: GENERAL EMPLOYEE AREAS ARE "THOSE AREAS COMMONLY USED BY MULTIPLE EMPLOYEES, SUCH AS RESTROOMS, BREAK ROOMS, CONFERENCE AND MEETING SPACE, ETC." EVEN WHEN THESE AREAS ARE RESTRICTED FOR EMPLOYEE USE ONLY, THEY COMPLY WITH TITLE 24 ACCESSIBILITY REQUIREMENTS.
7. NOTE: SPECIFIC WORK STATIONS IS INTENDED TO MEAN "PLACES WHERE INDIVIDUALS DO THEIR WORK, SUCH AS CHEF'S CHOPPING BLOCK IN A COMMERCIAL RESTAURANT OR A COMPUTER TERMINAL IN AN OFFICE." THESE WORK STATIONS ARE NOT REQUIRED TO BE ACCESSIBLE THEMSELVES, EXCEPT THAT AISLE AND FLOOR AND LEVEL REQUIREMENTS MUST BE MET AND ENTRYWAYS MUST BE AT LEAST 32" IN CLEAR WIDTH.
8. COMMON USE CIRCULATION PATHS WITHIN EMPLOYEE WORK AREAS SHALL COMPLY WITH SECTION 11B-402. 11B206.2.8 EXCEPTION: 2. COMMON USE CIRCULATION PATHS LOCATED WITHIN EMPLOYEE WORK AREAS THAT ARE AN INTEGRAL COMPONENT OF WORK AREA EQUIPMENT SHALL NOT BE REQUIRED TO COMPLY WITH 11B-402.
3. COMMON USE CIRCULATION PATHS LOCATED WITHIN EXTERIOR EMPLOYEE WORK AREAS THAT ARE FULLY EXPOSED TO THE WEATHER SHALL NOT BE REQUIRED TO COMPLY WITH 11B-402.
9. SECTION 11B-403 WALKING SURFACE, AND 11B-904 CHECK OUT AISLES AND SALES AND SERVICE COUNTER.
10. 403.5 CLEARANCES. WALKING SURFACES SHALL PROVIDE CLEARANCES COMPLYING WITH SECTION 11B-403.5.

EXITING PLAN LEGEND & NOTES

LEGEND

- EXITING PATH
- XX' — EXITING PATH DISTANCE (IN FEET)
- ONE HOUR RATED CORRIDOR
- - OCC. — OCCUPANCY COUNT (SEE BUILDING LIMITATIONS PLAN 1/A0.4 FOR OCCUPANCY TYPE AND CALCULATIONS)
- EXIT/COMBO LIGHT PER ELECTRICAL FIXTURE SCHEDULE. COMPLIANCE WITH BLDG. CODE SEC. 1011.4. SURFACE MTD.; (L) SELF-ILLUMINATED LOW LEVEL EXIT SIGN PROVIDED CONJUNCTION WITH EXIT SIGNAGE PACKAGE (WHERE SHOWN)
- FLOOR LEVEL EXIT SIGN
- F.E. — SEMI-RECESSED FIRE EXTINGUISHERS SEE SPECIFICATIONS AND DETAIL 7/D5.0 8/D5.0

EXITING PLAN – GENERAL NOTES

1. FULLY SPRINKLERED OCCUPANCY E MAX. ALLOWABLE TRAVEL DISTANCE IS 250'-0". ALL TRAVEL DISTANCES SHOWN ABOVE FALL UNDER 250'-0".
2. FULLY SPRINKLERED OCCUPANCY B MAX. ALLOWABLE TRAVEL DISTANCE IS 300'-0". ALL TRAVEL DISTANCES SHOWN ABOVE FALL UNDER 300'-0".
3. REFER TO THE BUILDING LIMITATIONS SHEET "A0.4" FOR INDIVIDUAL ROOM CALCULATIONS AND SQUAREFOOTAGES.
4. WHERE TWO OR MORE EXITS ARE REQUIRED, AT LEAST TWO EXITS MUST BE SEPARATED BY (HALF) (1/3) THE MAX. DIAGONAL LENGTH OF THE AREA SERVED. (1015.2.1)
5. THE EXIT PATH SHALL BE IDENTIFIED BY EXIT SIGNS CONFORMING TO THE REQUIREMENTS OF SECTION 1011. EXIT SIGNS SHALL BE READILY VISIBLE FROM ANY DIRECTION OF APPROACH. EXIT SIGNS SHALL BE LOCATED AS NECESSARY TO CLEARLY INDICATE THE DIRECTION OF EGRESS TRAVEL. NO POINT SHALL BE MORE THAN 100 FEET FROM THE NEAREST VISIBLE SIGN. (1011).
6. PROVIDE FLOOR-LEVEL EXIT SIGNS IN ALL INTERIOR CORRIDORS OF GROUP A, E, OCCUPANCIES. (1011.6)
7. PRIMARY STRUCTURAL FRAME TO BE 1-HOUR RATED CONSTRUCTION.
8. LOAD BEARING WALLS (EXTERIOR AND INTERIOR) TO BE 1 HOUR RATED CONSTRUCTION. (SEE SHEETS A1.1 AND A2.1 FOR WALL TYPES.)
9. ROOF CONSTRUCTION AND SECONDARY MEMBERS TO BE 1 HOUR RATED CONSTRUCTION.
10. PER SEC. 709.1-4 AND TABLE 1018.1, CORRIDOR WALLS SHALL HAVE A 1 HOUR FIRE PARTITION.
11. FLOOR CONSTRUCTION AND SECONDARY MEMBERS TO BE 1 HOUR RATED CONSTRUCTION. FLOOR/CEILING ASSEMBLY PROVIDED IS PER ITEM #26-1.1 IN TABLE 702.1(3) IN CBC 2010.
12. FIRE-RESISTANCE-RATED CORRIDORS SHALL BE CONTINUOUS FROM THE POINT OF ENTRY TO AN EXIT, AND SHALL NOT BE INTERRUPTED BY INTERVENING ROOMS. (1018.6)
    EXCEPTION #1: FOYERS, LOBBIES OR RECEPTION ROOMS CONSTRUCTED AS REQUIRED FOR CORRIDORS SHALL NOT BE CONSTRUED AS INTERVENING ROOMS.

FIRE DEPARTMENT – GENERAL NOTES

1. COMPLY WITH POSTING OF ROOM CAPACITY. FIRE CODE 2501.16.1 TITLE 24, SECTION 1004.3. (SUBJECT TO FIELD INSPECTION APPROVAL.)
2. THE MEANS OF EGRESS, AND EXIT DISCHARGE, SHALL BE ILLUMINATED AT ANY TIME THE BUILDING IS OCCUPIED WITH A LIGHT INTENSITY OF NOT LESS THAN 1 FOOT-CANDLE AT THE WALKING SURFACE LEVEL. BUILDING CODE 1006.2
3. EXITS, EXIT ACCESS DOORS AND PATHS OF EGRESS TRAVEL THAT IS NOT IMMEDIATELY VISIBLE TO THE OCCUPANTS SHALL BE MARKED BY AN APPROVED EXIT SIGN THAT IS READILY VISIBLE FROM ANY DIRECTION OF EGRESS TRAVEL. EXIT SIGNS SHALL BE INTERNALLY OR EXTERNALLY ILLUMINATED. BUILDING CODE 1011
   NOTE: ADDITIONAL EXIT SIGNS MAY BE REQUIRED AT TIME OF FIELD INSPECTION.
4. PROVIDE LOW-LEVEL EXIT SIGNS PER TITLE 24, 1011.6.
5. PORTABLE FIRE EXTINGUISHERS SHALL BE INSTALLED IN LOCATIONS AS REQUIRED BY FIRE CODE 906.
6. PROVIDE AN AUTOMATIC SPRINKLER SYSTEM.
7. EVERY ROOM OR SPACE THAT IS AN ASSEMBLY OCCUPANCY SHALL HAVE THE OCCUPANT LOAD OF THE ROOM OR SPACE POSTED IN A CONSPICUOUS PLACE, NEAR THE MAIN EXIT OR EXIT ACCESS DOORWAY FROM THE ROOM OR SPACE. POSTED SIGNS SHALL BE OF AN APPROVED LEGIBLE PERMANENT DESIGN AND SHALL BE MAINTAINED BY THE OWNER OR AUTHORIZED AGENT. BUILDING CODE 1004.3. FIRE CODE 1004.3.
8. WHERE EXIT SIGNS ARE REQUIRED, ADDITIONAL APPROVED FLOOR-LEVEL EXIT SIGNS WHICH ARE INTERNALLY OR EXTERNALLY ILLUMINATED, PHOTO LUMINESCENT OR SELF-LUMINOUS SHALL BE PROVIDED IN ALL INTERIOR CORRIDORS. BUILDING CODE 1011.6. FIRE CODE 1011.6.

FRANCO ARCHITECTS INC.
12345 Ventura Blvd. H
Studio City, CA 91604
Tel 818 754-2030
Fax 818 754-2032
Architecture and Planning

MAGNOLIA SCIENCE ACADEMY
18220 SHERMAN WAY, RESEDA, CA91335

REV	DESCRIPTION	DATE
	PLAN CHECK #1	6/14/2017

LICENSED ARCHITECT
JOHANN D. WANG
C27010
4/30/2019
REGISTRATION DATE
STATE OF CALIFORNIA

PROJECT
MAGNOLIA SCIENCE ACADEMY

PROJECT ADDRESS
18220 SHERMAN WAY, RESEDA, CA91335

DRAWING TITLE
SECOND FLOOR FURNITURE/EXITING PLAN

DRAWN BY
ISSUE DATE 6/14/2017
JOB NUMBER
DRAWING SCALE AS NOTED
APPROVED BY:

DRAWING NUMBER
A2.4

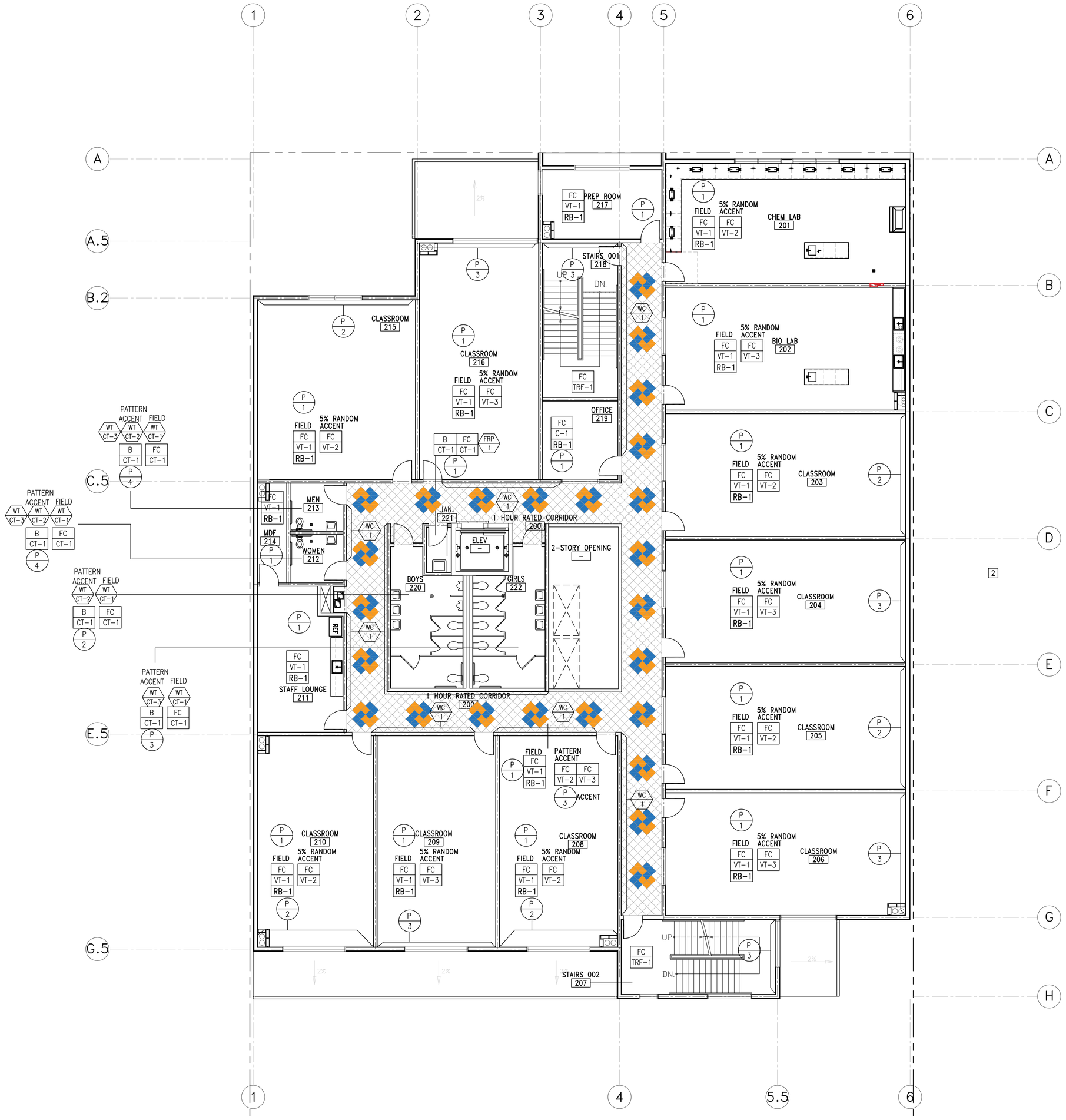

SECOND FLOOR FINISH PLAN

SCALE: 1/8" = 1'-0"

FINISH NOTES

1. CONTRACTOR SHALL SUBMIT 8"x8" SAMPLES OF ALL FINISHES TO ARCHITECT FOR APPROVAL, AT LEAST 2 WEEKS PRIOR TO INSTALL.
2. CONTRACTOR SHALL FOLLOW ALL MANUFACTURERS RECOMMENDATIONS & INSTRUCTIONS FOR THE INSTALL. OF ANY FINISHES OR PRODUCTS.
3. ALL MATERIAL AND ITS INSTALLATION SHALL COMPLY W/ ALL BUILDING FIRE & ADA CODES IN EFFECT IN THE CITY OF LOS ANGELES.
4. U.O.N. ALL ACCESS DOORS & PANELS SHALL BE PAINTED TO MATCH ADJ. SURFACE COLOR & FINISH.
5. G.C. AND THEIR SUBS SHALL BE RESPONSIBLE FOR ANY WALLCOVERING INSTALLATIONS.
6. ALL PRIMING & OR SIZING OF WALLS TO RECEIVE WALLCOVERING SHALL BE DONE BY THE SUB CONTRACTOR INSTALLING THE WALLCOVERING.
7. CONTRACTOR SHALL SUBMIT A CARPET SEAMING DIAGRAM & DIRECTION OF CARPET TO ARCHITECT AT LEAST 2 WEEKS PRIOR TO INSTALL.
8. FLOORING SUB SHALL PRE-INSPECT EXIST. FLOOR SLAB TO CHECK FOR CRACKS & UNEVENNESS. FLOAT FLOORS FOR PROPER INSTALLATIONS OF FLOOR FINISHES AS REQ'D. CONTRACTOR SHALL INCLUDE ALL COSTS TO PROPERLY PREPARE SLAB FOR SPECIFIED FINISH.
9. NO SUBSTITUTIONS OF FINISHES SHALL BE MADE W/OUT PRIOR WRITTEN APPROVAL FROM ARCHITECT.
10. PAINT INSIDE FACE OF ANY LIGHT COVES FLAT FINISH.
11. ALL DRYWALL CEILINGS SHALL BE PREPPED TO RECEIVE FLAT LATEX PAINT FINISH WITHOUT ANY APPARENT SEAMS OR IMPERFECTIONS.
12. CABINET SUB CONTRACTOR SHALL BE RESPONSIBLE FOR ALL FINISHES ON CABINETRY AS SHOWN ON MILLWORK PLANS.
13. WASH ALL REMAINING FLOORING.
14. INTERIOR FINISH SHALL BE PROVIDED IN ACCORDANCE TO TITLE 24, SECTION 804, AS FOLLOWS: CLASS I-VERTICAL ENCLOSURES; CLASS II-CORRIDORS; CLASS III-ROOMS.
    ALL DRAPES, HANGINGS, CURTAINS, DROPS AND ALL OTHER DECORATIVE MATERIAL TO COMPLY WITH FIRE CODE SECTION 1103.3.3.
16. PROVIDE ANTI-GRAFFITI FINISH AT THE FIRST 9 FEET, MEASURED FROM GRADE, AT EXTERIOR WALLS AND DOORS. (PAINTED SURFACE - LARR #25601T, UNFINISHED SURFACE - LARR #252861)
17. INTERIOR WALL AND CEILING FINISHES SHALL BE PROVIDED IN ACCORDANCE WITH BUILDING CODE 801 AND TABLE 803.9.
18. CURTAINS, DRAPERIES, HANGINGS AND OTHER DECORATIVE MATERIALS SUSPENDED FROM WALLS OR CEILINGS SHALL MEET THE FLAME PROPAGATION PERFORMANCE CRITERIA OF NFPA 701, IN ACCORDANCE WITH BUILDING CODE 806.2 OR BE NONCOMBUSTIBLE. BUILDING CODE 806.1.
19. ALL FLOORING TO BE SLIP-RESISTANT PER ADA CODE
20. TOILET ROOM FLOORS SHALL HAVE A SMOOTH, HARD NON ABSORBENT SURFACE SUCH AS PORTLAND CEMENT, CERAMIC TILE OR OTHER APPROVED MATERIAL THAT EXTENDS UPWARD ONTO THE WALLS AT LEAST 4" (1210.2.1)
21. WALLS WITHIN 2 FEET (610 MM) OF THE FRONT AND SIDES OF URINALS AND WATER CLOSETS SHALL HAVE A SMOOTH, HARD NON-ABSORBENT SURFACE OF PORTLAND CEMENT, CONCRETE, CERAMIC TILE OR OTHER SMOOTH, HARD NON-ABSORBENT SURFACE TO A HEIGHT OF 4 FEET (1219 MM), AND EXCEPT FOR STRUCTURAL ELEMENTS, THE MATERIALS USED IN SUCH WALLS SHALL BE OF A TYPE THAT IS NOT ADVERSELY AFFECTED BY MOISTURE. (1210.2.2)
22. CEMENT, FIBER-CEMENT OR GLASS MAT GYPSUM BACKERS IN COMPLIANCE WITH ASTM C1178, C1288 OR C1325 SHALL BE USED AS A BASE FOR WALL TILE IN TUB AND SHOWER AREAS AND WALL AND CEILING PANELS IN SHOWER AREAS. WATER-RESISTANCE GYPSUM BACKING BOARD SHALL BE USED AS A BASE FOR TILE IN WATER CLOSET COMPARTMENT WALLS WHEN INSTALLED IN ACCORDANCE WITH GA-216 OR ASTM C840. REGULAR GYPSUM WALLBOARD IS PERMITTED UNDER TILE OR WALL PANELS IN OTHER WALL AND CEILING AREAS WHEN INSTALLED IN ACCORDANCE WITH GA-216 OR ASTM C840. WATER-RESISTANT GYPSUM BOARD SHALL NOT BE USED IN THE FOLLOWING LOCATIONS: SECTION 2506.1
    a. OVER A VAPOR RETARDER.
    b. IN AREAS SUBJECT TO CONTINUOUS HIGH HUMIDITY, SUCH AS SAUNAS, STEAM ROOMS OR GANG SHOWER ROOMS
    c. ON CEILINGS WHERE FRAME SPACING EXCEEDS 12 INCHES O.C. FOR 1/2 INCH THICK AND MORE THAN 16 INCHES O.C. FOR 5/8 INCH THICK.
23. EVERY SPACE INTENDED FOR HUMAN OCCUPANCY SHALL BE PROVIDED WITH NATURAL LIGHT BY MEANS OF EXTERIOR GLAZED OPENINGS IN ACCORDANCE WITH SECTION 1205.2 OR SHALL BE PROVIDED WITH ARTIFICIAL LIGHT THAT IS ADEQUATE TO PROVIDE AN AVERAGE ILLUMINATION OF 10 FOOT-CANDLES OVER THE AREA OF THE ROOM AT A HEIGHT OF 30 INCHES ABOVE THE FLOOR LEVEL. (1205.1 AND 1205.3)

FINISH PLAN NOTES

1. INTERIOR FINISH MATERIALS APPLIED TO WALL AND CEILING SHALL BE TESTED AS SPECIFIED IN SECTION 803. OF THE CBC.
2. IN JANITOR CLOSET INSTALL FRP 48" AFF AROUND MOP SINK, 24" AWAY FROM SINK ON BOTH SIDES.
3. PROVIDE A LEVEL "5" SMOOTH FINISH FOR ALL DRYWALL
4. EXTERIOR STUCCO TO BE TROWEL APPLIED. PROVIDE DUNNE EDWARDS ENDURALASTIC 10 ELASTOMERIC FLAT FINISH PRIOR TO APPLYING FINAL ACRIBOND FLAT PAINT COLOR.

TYPICAL CORRIDOR WALLS

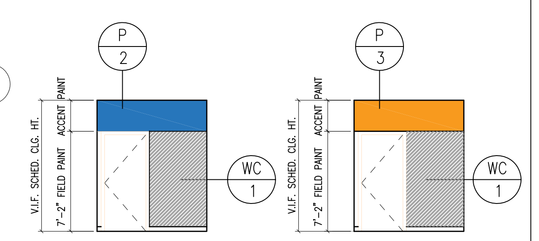

FIRST FLOOR

SECOND FLOOR

ACCENT PAINT TO BE ABOVE DOORS UP TO CEILING EVERYWHERE IN CORRIDORS

CA GREEN CODE NOTES

ENVIRONMENTAL QUALITY

1. IF THE HVAC SYSTEM IS USED DURING CONSTRUCTION, PROVIDE RETURN AIR FILTERS WITH A MINIMUN EFFICIENCY REPORTING VALUE (MERV) \OF 8, BASED ON ASHRAE 52.2-1999, OR AN AVERAGE EFFICIENCY OF 30 PERCENT, BASED ON ASHRAE 52.1-1992. REPLACE ALL FILTERS PRIOR TO OCCUPANCY OTR AT THE CONCLUSION OF CONSTRUCTION.

2. AT THE TIME OF ROUGH INSTALLATION, OR DURING STORAGE ON THE CONSTRUCTION SITE AND UNTIL FINAL STARTUP OF THE HEATING AND COOLING EQUIPMENT, ALL DUCT AND OTHER RELATED AIR DISTRIBUTION COMPONENT OPENINGS SHALL BE COVERED WITH TAPE, PLASTIC, SHEET METAL, OR OTHER ACCEPTABLE METHODS TO REDUCE THE AMOUNT OR DUST OR DEBRIS WHICH MAY COLLECT IN THE SYSTEM." (5.504.3)

3. PROVIDE FINISH PLAN COMPLYING WITH THE FOLLOWING:
   a. ADHESIVES, SEALANTS AND CAULKS, PAINTS AND COATINGS, AND AEROSOL PAINTS AND COATINGS SHALL MEET OR EXCEED THE STANDARDS OUTLINED IN SECTIONS 5.504.4.1, 5.504.4.3, AND 5.504.4.3.1 RESPECTIVELY. VERIFICATION OF COMPLIANCE WITH THESE SECTIONS MUST BE PROVIDED AT THE TIME OF INSPECTION.

   b. ALL CARPET INSTALLED IN THE BUILDING INTERIOR SHALL MEET THE TESTING AND PRODUCT REQUIREMENTS OF ONE OF THE FOLLOWING: (5.504.4.4)
      I. CARPET AND RUG INSTITUTE'S GREEN LABEL PLUS PROGRAM OR
      II. CALIFORNIA DEPARTMENT OF PUBLIC HEALTH STANDARD PRACTICE FOR THE TESTING OF VOC'S (SPEC 01350) OR
      III. NSF/ANSI 140 AT THE GOLD LEVEL OR
      IV. SCIENTIFIC CERTIFICATIONS SYSTEMS SUSTAINABLE CHOICE

   c. ALL CARPET CUSHION INSTALLED IN THE BUILDING INTERIOR SHALL MEET THE REQUIREMENTS OF THE CARPET AND RUG INSTITUTE GREEN LABEL PROGRAM. CARPET ADHESIVES SHALL NOT EXCEED A VOC LIMIT OF 50 G/L. (5.504.4.4.1, 5.504.4.4.2)

   d. COMPOSITE WOOD PRODUCTS (HARDWOOD PLYWOOD, PARTICLE BOARD, AND MDF COMPOSITE WOOD) INSTALLED ON THE INTERIOR OR EXTERIOR OF THE BUILDING SHALL MEET OR EXCEED THE STANDARDS OUTLINED IN TABLE 5.504.4.5. (5.504.4.5)

   e. MINIMUM OF 50% OF FLOOR AREA RECEIVING RESILIENT FLOORING SHALL COMPLY WITH THE VOC EMISSION LIMITS DEFINED IN THE CHPS LOW-EMITTING MATERIALS LIST OR CERTIFIED UNDER THE RFCI FLOORSCORE PROGRAM. VERIFICATION OF COMPLIANCE WITH THESE SECTIONS MUST BE PROVIDED AT THE TIME OF INSPECTION. (5.504.4.6)

FINISH SPECIFICATIONS:

PAINT- INTERIOR

(P 1) MFG.: DUNN EDWARDS
COLOR: DEW338 WHITE HEAT
FINISH: SEMI GLOSS
LOCATION: THROUGHOUT U.O.N.

(P 2) MFG.: DUNN EDWARDS
COLOR: DET573 MOUNTAIN BLUEBIRD
FINISH: SEMI GLOSS
LOCATION: ACCENT- WHERE IS SPECIFIED

(P 3) MFG.: DUNN EDWARDS
COLOR: DE5194 TANGERINE TANGO
FINISH: SEMI GLOSS
LOCATION: ACCENT- WHERE IS SPECIFIED

(P 4) MFG.: DUNN EDWARDS
COLOR: DE6381 SILVER BULLET
FINISH: SEMI GLOSS
LOCATION: ACCENT- RESTROOMS

PAINT- EXTERIOR

(P 1) MFG.: DUNN EDWARDS
COLOR: TBA
FINISH: ENDURALASTIC 10 ELASTOMERIC FLAT PAINT
LOCATION: EXTERIOR PAINT COLOR WHERE SPECIFIED

(P X) MFG.: DUNN EDWARDS
COLOR: TBA
FINISH: ENDURALASTIC 10 ELASTOMERIC FLAT PAINT
LOCATION: EXTERIOR PAINT COLOR WHERE SPECIFIED

(P X) MFG.: DUNN EDWARDS
COLOR: TBA
FINISH: ENDURALASTIC 10 ELASTOMERIC FLAT PAINT
LOCATION: EXTERIOR PAINT COLOR WHERE SPECIFIED

(P X) MFG.: DUNN EDWARDS
COLOR: TBA
FINISH: ENDURALASTIC 10 ELASTOMERIC FLAT PAINT
LOCATION: EXTERIOR PAINT COLOR WHERE SPECIFIED

(P X) MFG.: DUNN EDWARDS
COLOR: TBA
FINISH: ENDURALASTIC 10 ELASTOMERIC FLAT PAINT
LOCATION: EXTERIOR PAINT COLOR WHERE SPECIFIED

(P X) MFG.: DUNN EDWARDS
COLOR: TBA
FINISH: ENDURALASTIC 10 ELASTOMERIC FLAT PAINT
LOCATION: EXTERIOR PAINT COLOR WHERE SPECIFIED

*NOTE: FOR EXTERIOR PAINT PROVIDE ANTI-GRAFFITI FINISH AT THE FIRST 9 FEET, MEASURED FROM GRADE, AT EXTERIOR WALLS AND DOORS. (6306) (PAINTED SURFACE-LARR #25601T)

RUBBER BASE

(RB-1) MFG: BURKE MERCER
TYPE: 4" COVED
COLOR: 217 CHARCOAL
LOCATION: THROUGHOUT (U.O.N)

PLASTIC LAMINATE

(PL-1) MFG.: WILSONART
COLOR: 10338-60 MARMALADE
FINISH: MATTE FINISH
LOCATION: SEE CABINETWORK SHEETS

(PL-2) MFG.: WILSONART
COLOR: 10356-60 SEA BERRY
FINISH: MATTE FINISH
LOCATION: SEE CABINETWORK SHEETS

(PL-3) MFG.: WILSONART
COLOR: D90-60 NORTH SEA
FINISH: MATTE FINISH
LOCATION: SEE CABINETWORK SHEETS

(PL-4) MFG.: WILSONART
COLOR: 10393-60 OXIDIZED SILVER
FINISH: MATTE FINISH
LOCATION: SEE CABINETWORK SHEETS

QUARTZ STONE

(QS-1) MFG: PENTAL QUARTZ
TYPE: 3/4" SLAB
COLOR: BS1249 COASTAL GREY POLISHED
BACKSPLASH: 12" ALL WAY AROUND COUNTER
LOCATION: SEE CABINETWORK SHEETS

EPOXY RESIN

(EP-1) MFG.: ISEC
COLOR: BLACK
LOCATION: SEE CABINETWORK SHEETS- LABS
NOTE: ALL HORIZONTAL SURFACES (U.O.N.)

VINYL COMPOSITION TILE

(FC VT-1) MFG.: ARMSTRONG- STANDARD EXCELON
COLOR: 51807 SHADOW BLUE
SIZE: 12"x12"
LOCATION: FIELD THROUGHOUT (U.O.N.)

(FC VT-2) MFG.: ARMSTRONG- RAVE
COLOR: 57508 BODACIOUS BLUE
SIZE: 12"x12"
LOCATION: ACCENT COLOR WHERE SPECIFIED ON PLAN

(FC VT-3) MFG.: ARMSTRONG- RAVE
COLOR: 57516 SCREAMIN' PUMPKIN
SIZE: 12"x12"
LOCATION: ACCENT COLOR WHERE SPECIFIED ON PLAN

FIBERGLASS REINFORCED PANEL

(FRP 1) MFG.: KOROGUARD PROTECTIVE SHEET WALLCOVERING
COLOR: LIGHT GRAY
THICKNESS: 0.060"
LOCATION: JANITOR'S CLOSET RMS. #124 & #221 BEHIND MOP SINKS A 48"AFF. AND WALLS AT 24" AWAY FROM SINK ON BOTH SIDES

CERAMIC TILE (WALLS)

(WT CT-1) MFG.: DALTILE
TYPE: SEMI-GLOSS
COLOR: 0135 ALMOND (1)
SIZE: 4"X 4"
LOCATION: RESTROOM WALLS (FIELD)

(WT CT-2) MFG.: DALTILE
TYPE: SEMI-GLOSS
COLOR: Q049 OCEAN BLUE (4)
SIZE: 4"X 4"
LOCATION: RESTROOM WALLS (ACCENT)
SEE RESTROOM TILE PATTERN ELEVATION

(WT CT-3) MFG.: DALTILE
TYPE: SEMI-GLOSS
COLOR: Q097 ORANGE BURST (4)
SIZE: 4"X 4"
LOCATION: RESTROOM WALLS (ACCENT)
SEE RESTROOM TILE PATTERN ELEVATION

CERAMIC TILE BASE

(B CT-1) MFG.: DALTILE
TYPE: KEYSTONES
COLOR: D208 SUEDE GRAY SPECKLE
BUILT UP BASE MB-58
SIZE: 2" X 2"
LOCATION: RESTROOM WALLS

CERAMIC TILE (FLOOR)

(FC CT-1) MFG.: DALTILE
TYPE: KEYSTONES
COLOR: D208 SUEDE GRAY SPECKLE
SIZE: 2" X 2"
LOCATION: RESTROOM FLOORS

TILE GROUT

MFG.: CUSTOM BUILDING PRODUCTS
COLOR: #101 QUARTZ
LOCATION: WALLS

MFG.: CUSTOM BUILDING PRODUCTS
COLOR: #19 PEWTER
LOCATION: FLOOR & WALL BASE ONLY

STAIR TREAD/RISER/LANDING

(FC TRF-1) MFG.: BURKE UNI-STEP STAIR SYSTEM
COLOR: 027 AGATE GRAY
STYLE: ENDURA FLECKSIBLES ONE STEP TREAD RISER
VISUALLY IMPAIRED COLOR: BRICK
LOCATION: ALL INTERIOR STAIR TREAD/RISER/LANDING

CARPET

(FC C-1) MFG: SHAW
TYPE: COLOR FRAME
COLOR: DISAPPEAR 81557
LOCATION: OFFICE/ADMIN FIELD

WALL CARPET

(WC 1) MFG.: SHAW
STYLE: 234MC METROWALL II
COLOR: 34500 SILVER FOX
LOCATION: CORRIDOR WALLS- SCHOOL TO APPROVE
NOTE: ADD METAL TRIM AROUND EVERY EDGE OF WALL COVERING, INCLUDING ALONG THE DOORS AND EDGE OF THE RUBBER BASE

RESTROOM WALL DESIGN DETAIL- TYPICAL

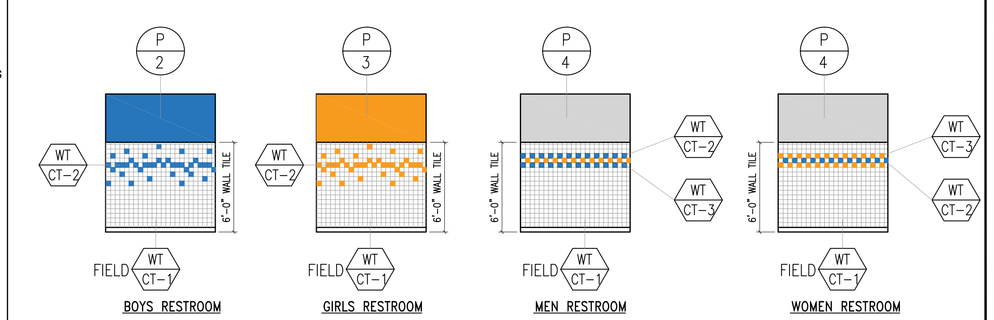

FRANCO ARCHITECTS INC.
12345 Ventura Blvd. H
Studio City, CA 91604
Tel 818 754-2030
Fax 818 754-2032
Architecture and Planning

MAGNOLIA SCIENCE ACADEMY
18220 SHERMAN WAY, RESEDA, CA91335

REV	DESCRIPTION	DATE
	PLAN CHECK #1	6/14/2017

LICENSED ARCHITECT
JOHANN D. WANG
C27010
4/30/2019
RENEWAL DATE
STATE OF CALIFORNIA

PROJECT: MAGNOLIA SCIENCE ACADEMY
PROJECT ADDRESS: 18220 SHERMAN WAY, RESEDA, CA91335
DRAWING TITLE: SECOND FLOOR FINISH PLAN
DRAWN BY:
ISSUE DATE: 6/14/2017
JOB NUMBER:
DRAWING SCALE: AS NOTED
APPROVED BY:
DRAWING NUMBER: A2.5

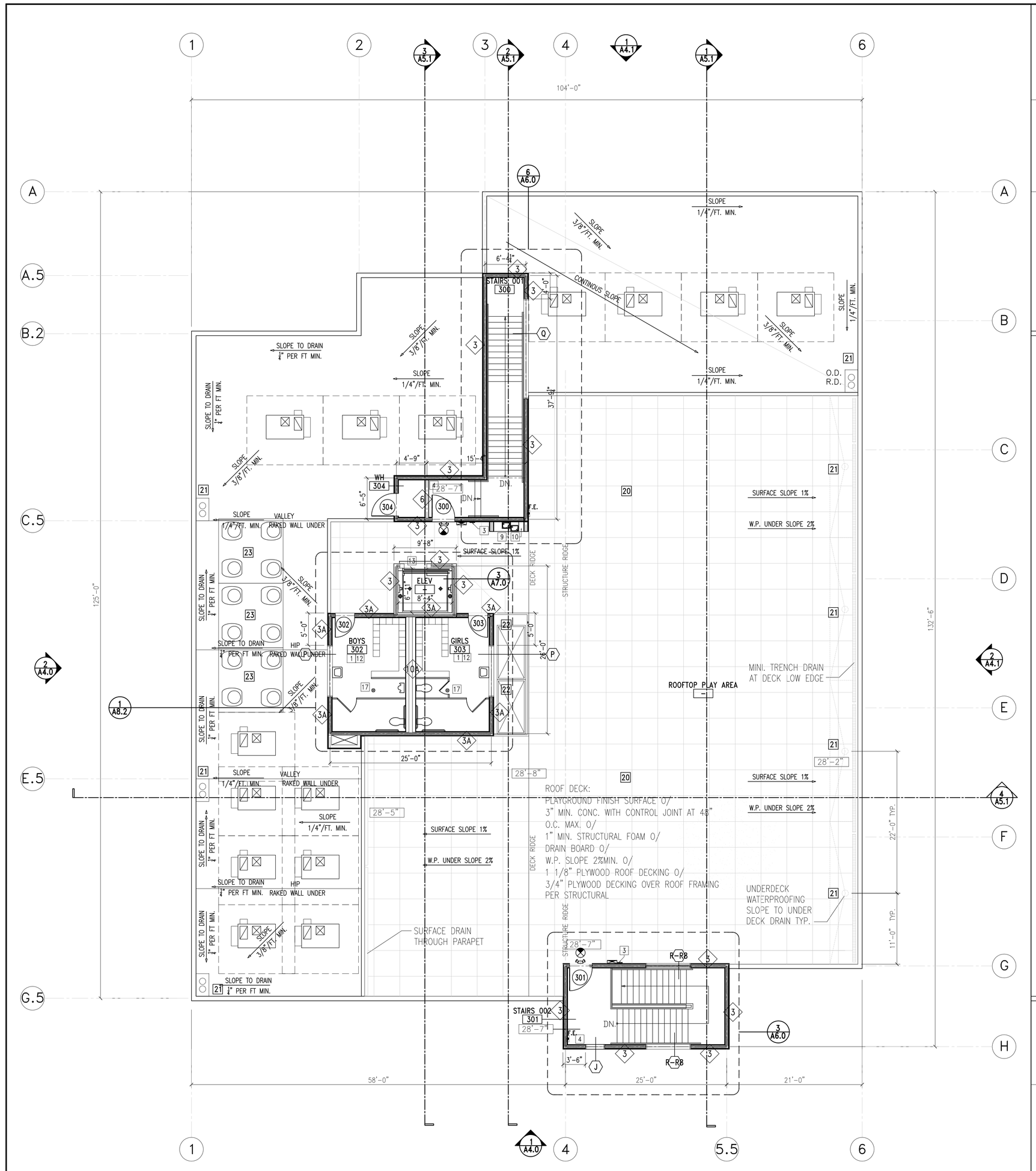

ROOF CONSTRUCTION PLAN

SCALE: 1/8" = 1'-0"

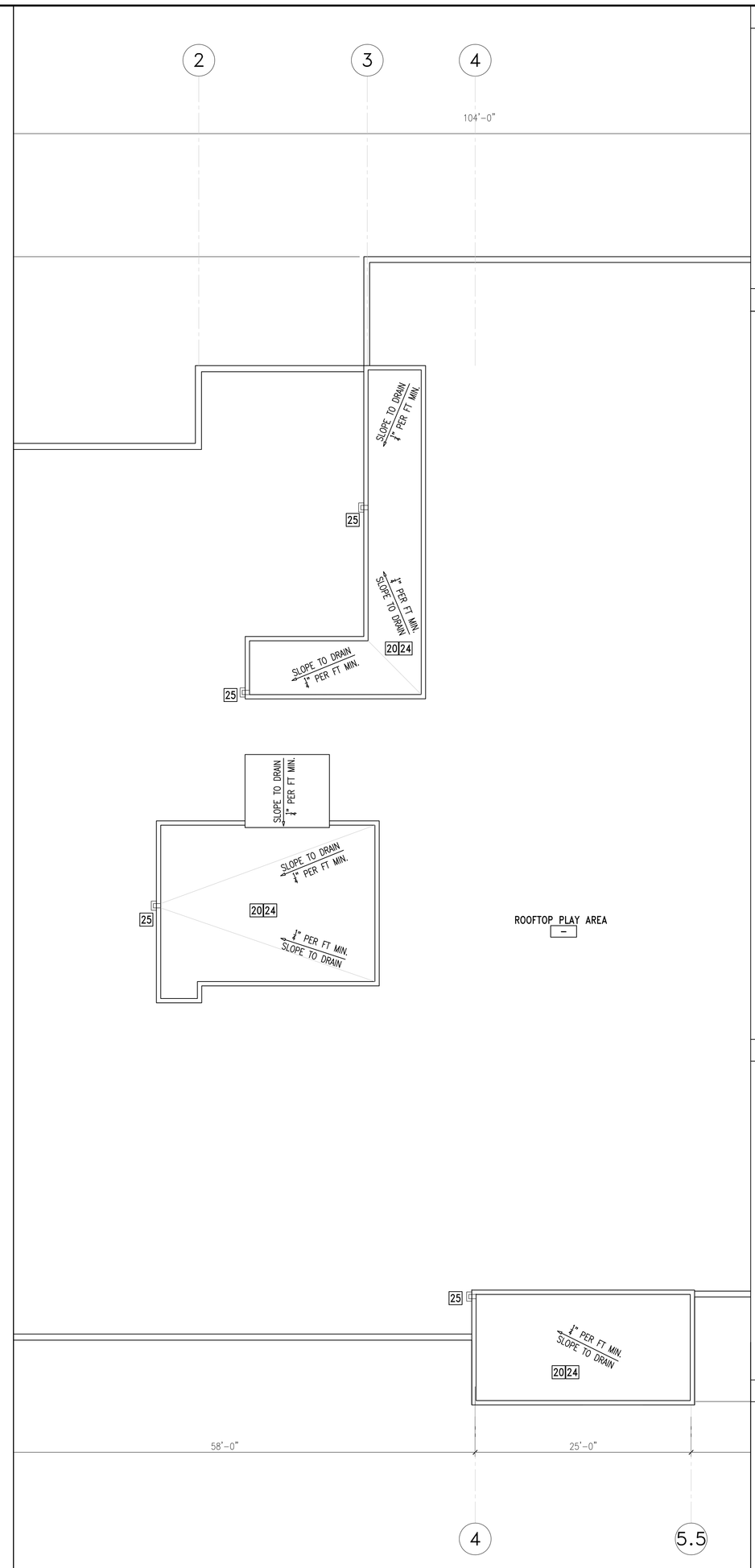

PARTIAL ROOF CONSTRUCTION PLAN

SCALE: 1/8" = 1'-0"

SYMBOLS LEGEND

- FINISH FLOOR ELEVATION CHANGE
- F.E. — SEMI-RECESSED FIRE EXTINGUISHERS SEE SPECIFICATIONS AND DETAIL 7/D5.0 8/D5.0
- 300A — DOOR NUMBER; DOOR KEY SEE DOOR SCHEDULE A10.0
- X — WINDOW KEY SEE WINDOW SCHEDULE A10.1; WINDOW TYPE
- 48" x 96" SKYLIGHT; DUAL WALL, WHITE ACRYLIC DOME SKYLIGHT (LARR #2708)
- A/C UNIT, SEE MECH. PLAN

WALL LEGEND

EXTERIOR WALLS 2 HOUR FIRE RATED

1. FURRING WALL @ CMU WALL-5/8" TYPE 'X' GYP ONE SIDE, EXTERIOR PLASTER TROWL APPLIED. SEE DETAIL 1/D2.0 AND STRUCT'L DETAIL — EXT. SIDE
2. 2-HR EXTERIOR STUCCO WALL WITH R-19 INSULATION, EXTERIOR PLYWOOD, FIBERGLASS MAT GYP SHEATHING, EXTERIOR PLASTER TROWEL APPLIED, STRUCTURAL PLYWOOD, 2-LAYER GYP. BD INTERIOR SIDE; SEE DETAIL 4A/D2.0 5A/D2.0 AND STRUCT'L DETAIL — EXT. SIDE
3. 2-HR EXTERIOR STUCCO WALL WITH R-19 INSULATION, EXTERIOR PLYWOOD, FIBERGLASS MAT GYP SHEATHING, EXTERIOR PLASTER TROWEL APPLIED, 2-LAYER GYP. BD INTERIOR SIDE; SEE DETAIL 4/D2.0 5/D2.0 AND STRUCT'L DETAIL — EXT. SIDE
3A. SAME AS 3 EXCEPT WITH CERAMIC TILE INTERIOR SIDE. 6/D2.0 — EXT. SIDE
4. 2-HR EXTERIOR STUCCO WALL @ NORTH CANOPY, SEE DETAIL 3/D2.0

INTERIOR WALLS 1 HOUR FIRE RATED PARTITIONS

6. 1-HR FIRE-RATED PARTITION/DEMISING SHEAR WALL WITH PLYWOOD ONE (CORRIDOR) SIDE. SEE DETAIL 8/D2.0 AND SEE STRUCT'L
6A. 1-HR FIRE-RATED PARTITION AT CORRIDOR WITH STRUCT. PLYWOOD AND 5/8" TYPE "X" GYP. BD. ONE SIDE (CORRIDOR) AND 5/8" WATER RESISTANT GYP. BD. ON RESTROOM/JANITOR SIDE, SEE DETAIL 8A/D2.0
6B. 1-HR FIRE-RATED PARTITION/DEMISING SHEAR WALL WITH PLYWOOD BOTH SIDES. SEE DETAIL 8B/D2.0 AND SEE STRUCT'L
7. 1-HR FIRE-RATED SHAFT WALL, SEE DETAIL 9/D2.0 AND STRUCTURAL

INTERIOR WALLS NON-RATED PARTITIONS

9. WOOD STUD DOUBLE PLUMBING WALL 5/8" TYPE X WATER RESISTANT GREEN GYP BD. EXPOSED SIDE, WITH SOUND INSULATION, SEE DETAIL 11/D2.0
10. STUD WALL AT WET AREA WITH 5/8" WATER RESISTANT GYP. BD. ON EXPOSED SIDE ONLY. SEE DET. 1/D3.0
10A. STUD WALL AT WET AREA WOOD STUD WALL FULL HEIGHT AND SOUND INSULATION WITH 5/8" WATER RESISTANT GYP. BD. BOTHE SIDES. SEE DETAIL 1A/D3.0
11. WOOD STUD WALL FULL HEIGHT WITH 5/8" GYP. BOARD BOTH SIDES WITH SOUND INSULATION. 10/D2.0

CONSTRUCTION PLAN NOTES

1 — 18 SEE A1.1

20 INSTALL NEW FIRE CLASS 'A', 5-PLY, BUILT-UP ROOF. SUPPLY A 20 YEAR MINIMUM WARRANTY

21 ROOF DRAINS/OVERFLOW DRAINS. FOR ROOF DRAINS/OVERFLOW DRAINS EXITING THE BUILDING, SEE DETAIL 2/D3.0 5/D5.0 14/D1.0 15/D1.0

22 INSTALL NEW 48" x 96" SKYLIGHT AS SHOWN. WHITE ACRYLIC DOME (LARR# 2708) SKYLIGHTS SHALL BE DUAL GLAZED SELF FLASHING MOUNTED LEVEL ON NEW WOOD CURBS. SKYLIGHTS SET AT AN ANGLE OF LESS THAN 45 DEGREES FROM THE HORIZONTAL PLANE SHALL BE MOUNTED AT LEAST 4" ABOVE THE PLANE OF THE ROOF ON A CURB CONSTRUCTED AS REQUIRED FOR THE FRAME. GLASS SKYLIGHTS SHALL COMPLY WITH SEC. 2405. PLASTIC SKYLIGHTS SHALL COMPLY WITH SEC. 2610. SEE 17/D1.0

23 MECHANICAL PLATFORM-RAISED 12", SLOPE 1/4" PER FT. TO DRAIN, SEE MECHANICAL -TYP.

24 3" MIN. CONC. SLOPE 1% OVER W.P. SLOPE 2% MIN. O/ROOF DECKING

25 SCUPPER DRAIN

ROOF CONSTRUCTION NOTES:

1. ROOF TO BE CONSTRUCTED AS A FIVE PLY CLASS A FIRE-RATED BUILT-UP ROOF ASSEMBLY.
2. ROOF ASSEMBLY TO BE LISTED BY AN APPROVED TESTING AGENCY.
3. ROOF TO CARRY NDL UNLIMITED 20 YEAR WARRANTY.
4. INSTALL BUILT-UP ROOFING MEMBRANE SYSTEM ACCORDING TO ROOFING SYSTEM MANUFACTURER'S WRITTEN INSTRUCTIONS AND APPLICABLE RECOMMENDATIONS OF ARMA/NRCA'S "QUALITY CONTROL GUIDELINES FOR THE APPLICATION OF BUILT-UP ROOFING."
5. INSTALL FOUR PLY SHEETS STARTING AT LOW POINT OF ROOFING SYSTEM. ALIGN PLY SHEETS WITHOUT STRETCHING. SHINGLE SIDE LAPS OF PLY SHEETS UNIFORMLY TO ACHIEVE REQUIRED NUMBER OF PLIES THROUGHOUT THICKNESS OF ROOFING MEMBRANE. SHINGLE IN DIRECTION TO SHED WATER. EXTEND PLY SHEETS OVER AND TERMINATE BEYOND CANTS.
6. GROUP E OCCUPANCIES SHALL BE PROVIDED WITH A FIRE RETARDANT ROOF IN ACCORDANCE WITH BUILDING CODE 1505 AND TABLE 1505.1.
7. SIZE THE ROOF DRAINS AND OVERFLOW DRAINS ACCORDING TO THE CHAPTER 11 OF THE LAPC (1503.4) SEE PLUMBING PLAN
8. ROOF DRAIN AND OVERFLOW DRAIN MUST BE INDEPENDENT LINES TO STORM DRAIN SYSTEM. SEE PLUMBING PLAN FOR ROOF DRAIN DIAGRAM
9. ROOF DRAINAGE IS NOT PERMITTED TO FLOW OVER PUBLIC PROPERTY. **REFER TO "ROOF PLAN KEY NOTES" AT LEFT FOR ADDITIONAL INFORMATION.**

NEW BUILDING – ROOFING MATERIALS LIST:

CLASS A FIVE PLY FIRE-RATED BUILT-UP ROOF ASSEMBLY:
MANUF.: GAF MATERIALS CORPORATION

DECK:	PLYWOOD
BASE SHEET:	GAFGLAS #75 BASE SHEET, ASTM D-4601 – (1)LAYER
PLY SHEET	GAFGLAS FLEX-PLY6, ASTM D-2178 – (3)PLY
SURFACING	ENERGYCAP BUR, ASTM D-3909 (1)PLY
FLASHING MEMBRANE 2XMM(EC)	RUBEROID MOP SMOOTH, ASTM D-6164 ENERGYCAP BUR, ASTM D-3909 (1)PLY
GUARANTEE	**DIAMOND PLEDGE NDL – 20 YEARS UNLIMITED**
WALKWAYS	WALKWAY PADS: MINERAL-GRANULE-SURFACED, REINFORCED ASPHALTIC COMPOSITION, SLIP-RESISTING PADS. PAD SIZE: 4X4. CAP SHEET STRIPS: ASTM D 6163, TYPE I OR II, GLASS-FIBER-REINFORCED, SBS-MODIFIED, ASPHALT-IMPREGNATED AND COATED WALKWAY SHEET; WITH WHITE COARSE MINERAL-GRANULE TOP SURFACING AND FINE MINERAL SURFACING ON THE BOTTOM SURFACE.

GENERAL NOTES AND CONSTRUCTION PLAN NOTES–SEE A1.1

GENERAL CONSTRUCTION NOTES:

1. SEE SEPARATE DISCIPLINE DRAWINGS FOR STRUCTURAL, ELECTRICAL, MECHANICAL, PLUMBING AND LANDSCAPING.
2. FIRE SPRINKLERS AND FIRE LIFE SAFETY TO BE DESIGN BUILD AND COVERED UNDER SEPARATE PERMIT.
3. NEW SPRINKLER SYSTEM TO BE APPROVED BY FIRE DEPARTMENT PRIOR TO INSTALLATION.
4. EVERY OPENING IN EVERY EXTERIOR WALL OR ROOF SURFACE SHALL BE FLASHED WITH SHEET METAL OR APPROVED BUILDING PAPER.
5. OPENINGS INTO FLOORS, OR OTHER ENCLOSED AREAS SHALL NOT EXCEED 144 SQ. INCH AND SHALL BE COVERED WITH CORROSION RESISTANT WIRE MESH WITH MESH OPENINGS OF 1/4 INCH.
6. SEE PLUMBING PLAN FOR CONNECTION FROM ROOF DRAINS AND OVERFLOW DRAINS TO STORMDRAIN SYSTEM.
   - D.S. = DOWNSPOUTS
   - R.D. = ROOF DRAIN
   - O.D. = OVERFLOW DRAIN
   - RA = ROOF ACCESS
7. SEE PLUMBING PLAN FOR CONNECTION FROM ROOF DRAINS AND OVERFLOW DRAINS TO STORMDRAIN.
8. ALL MECH. EQUIPMENT LOCATED ON THE ROOF HAS A MIN. 3'-0" PERIMETER ACCESS AS REQUIRED BY THE LAMC. (1513). SEE PLAN ABOVE.

BUILDING DEPARTMENT NOTES:

1. IN BUILDINGS USED FOR OTHER THAN RESIDENTIAL OCCUPANCIES, DRAFT STOPS MUST BE INSTALLED IN WOOD FRAME FLOOR CONSTRUCTION CONTAINING CONCEALED SPACE. SUCH DRAFT STOPS MUST BE INSTALLED SO THAT THE AREA OF THE CONCEALED SPACE DOES NOT EXCEED (1000) SQUARE FEET (718.3.3).
2. IN BUILDINGS USED FOR OTHER THAN RESIDENTIAL OCCUPANCIES, DRAFT STOPS MUST BE INSTALLED IN THE ATTIC (MANSARDS) (OVERHANGS) (FALSE FRONTS SET OUT FROM WALLS) (SIMILAR CONCEALED SPACES) FORMED BY COMBUSTIBLE CONSTRUCTION. SUCH DRAFT STOPS MUST BE INSTALLED SO THAT THE AREA OF THE CONCEALED SPACE DOES NOT EXCEED (3000) SQUARE FEET (718.4.3).
3. DRAFT-STOPPING MATERIALS MUST NOT BE LESS THAN ½-INCH GYPSUM BOARD, 3/8-INCH PLYWOOD, 3/8-INCH TYPE 2-M PARTICLE BOARD OR OTHER MATERIALS APPROVED BY THE BUILDING DEPARTMENT. DRAFT-STOPPING MUST BE ADEQUATELY SUPPORTED. (718.3.1)
4. FIRE BLOCKING MUST BE PROVIDED IN ACCORDANCE WITH SECTION 718.2 AT THE FOLLOWING LOCATIONS:
   - a. IN CONCEALED SPACES OF STUD WALLS AND PARTITIONS, INCLUDING FURRED SPACES, AT THE CEILING AND FLOOR LEVELS.
   - b. IN CONCEALED SPACES OF STUD WALLS AND PARTITIONS, INCLUDING FURRED SPACES, AT 10-FOOT INTERVALS ALONG THE LENGTH OF THE WALL.
   - c. AT ALL INTERCONNECTIONS BETWEEN CONCEALED VERTICAL AND HORIZONTAL SPACES SUCH AS OCCUR AT SOFFITS, DROP CEILINGS AND COVE CEILINGS.
   - d. IN CONCEALED SPACES BETWEEN STAIR STRINGERS AT THE TOP AND BOTTOM OF THE RUN AND BETWEEN STUDS ALONG AND IN LINE WITH THE RUN OF STAIRS IF THE WALL UNDER THE STAIRS IS UNFINISHED.
   - e. IN OPENINGS AROUND VENTS, PIPES, DUCTS, CHIMNEYS, FIREPLACES AND SIMILAR OPENINGS WHICH AFFORD A PASSAGE FOR FIRE AT CEILING AND FLOOR LEVELS, WITH NONCOMBUSTIBLE MATERIALS.

CA GREEN CODE NOTES

1. PRIOR TO PERMIT BEING FINALED, A COMPLETE REPORT OF THE TESTING AND ADJUSTING SHALL BE PROVIDED TO THE OWNER OR OWNER'S REPRESENTATIVE AND FORM 5.410 – TESTING AND ADJUSTING SHALL BE COMPLETED AND PROVIDED TO THE INSPECTOR. (CAL GREEN 5.410.4.)
2. PRIOR TO PERMIT BEING FINALED, A COMPLETE REPORT OF THE COMMISSIONING PROCESS SHALL BE PROVIDED TO THE OWNER OR OWNER'S REPRESENTATIVE AND FORM 5.410 – VERIFICATION SHALL BE COMPLETED AND PROVIDED TO THE INSPECTOR. (CAL GREEN 5.410.2)
3. IF THE HVAC SYSTEM IS USED DURING CONSTRUCTION, PROVIDE RETURN AIR FILTERS WITH A MINIMUM EFFICIENCY REPORTING VALUE (MERV) OF 8, BASED ON ASHRAE 52.2-1999, OR AN AVERAGE EFFICIENCY OF 30 PERCENT, BASED ON ASHRAE 52.1-1992. REPLACE ALL FILTERS PRIOR TO OCCUPANCY OR AT THE CONCLUSION OF CONSTRUCTION. (CAL GREEN 5.504.1.3)
4. AT THE TIME OF ROUGH INSTALLATION, OR DURING STORAGE ON THE CONSTRUCTION SITE AND UNTIL FINAL STARTUP OF THE HEATING, COOLING, AND VENTILATING EQUIPMENT, ALL DUCT AND OTHER RELATED AIR DISTRIBUTION COMPONENT OPENINGS SHALL BE COVERED WITH TAPE, PLASTIC, SHEET METAL, OR OTHER ACCEPTABLE METHODS TO REDUCE THE AMOUNT OR DUST, WATER, AND DEBRIS WHICH MAY ENTER THE SYSTEM. (CAL GREEN 5.504.3)
5. PROVIDE A COOL ROOF WITH ADEQUATE THERMAL EMITTANCE AND SOLAR REFLECTANCE, OR SRI VALUES IN ACCORDANCE WITH TABLE A5.106.11.2.1. (A5.106.11.2)

FRANCO ARCHITECTS INC.
12345 Ventura Blvd. H
Studio City, CA 91604
Tel 818 754-2030
Fax 818 754-2032
Architecture and Planning

MAGNOLIA SCIENCE ACADEMY

18220 SHERMAN WAY, RESEDA, CA91335

REV	DESCRIPTION	DATE
	PLAN CHECK #1	6/14/2017

LICENSED ARCHITECT — JONANN D. FRANCO — C27010 — 4/30/2019 RENEWAL DATE — STATE OF CALIFORNIA

PROJECT: MAGNOLIA SCIENCE ACADEMY

PROJECT ADDRESS: 18220 SHERMAN WAY, RESEDA, CA91335

DRAWING TITLE: ROOF CONSTRUCTION PLAN

DRAWN BY: | ISSUE DATE: 6/14/2017

JOB NUMBER: | DRAWING SCALE: AS NOTED

APPROVED BY:

DRAWING NUMBER: A3.1

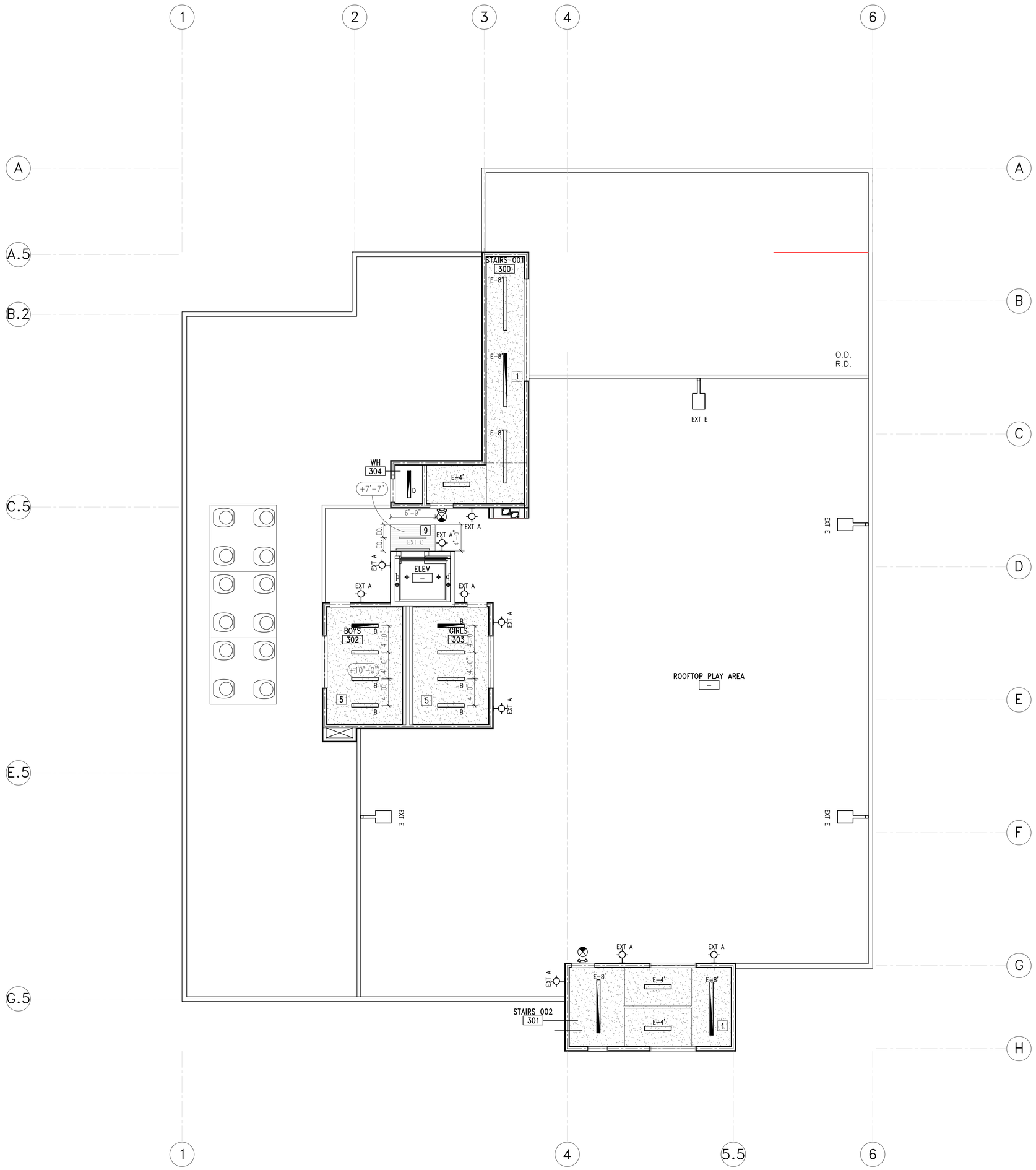

THIRD REFLECTED CEILING PLAN

SCALE: 1/8" = 1'-0"

GENERAL NOTES

1. REFER TO ENGINEERED DWGS FOR CIRCUITING & EXACT FIXTURE OUTLET & SPECS. ALL LIGHT SWITCHES TO BE CIRCUITED & INSTALLED TO COMPLY WITH LOCAL CODES, A.D.A. TITLE 24 & APPLICABLE STATE ENERGY REQ'MTS.
2. SPECIFICATIONS & ILLUSTRATIONS OF MECHANICAL & ELECTRICAL DEVICES SPECIFIED BY THE MECHANICAL AND ELECTRICAL ENGINEERS SHALL BE SUBMITTED TO FRANCO & ASSOCIATES FOR APPROVAL STAMP PRIOR TO PURCHASE.
3. MECHANICAL & ELECTRICAL ENGINEERED DWGS ARE NOT INTENDED TO SHOW EXACT LOCATIONS OF FIXTURES, OUTLETS, OR EQUIPMENT: REFER TO ARCHITECTURAL DWGS.
4. LIGHT FIXTURES SHALL BE LOCATED EXACTLY AS NOTED. CONTRACTOR SHALL FIELD CHECK ELECTRICIAN'S LAYOUT OF LIGHT FIXTURES PRIOR TO FINAL CONNECTIONS.
5. ALL DUCTWORK, DIFFUSERS, EXHAUST FANS & OTHER MECHANICAL DEVICES AND EQUIPMENT ABOVE OR PENETRATING THE CLG. SHALL BE LOCATED IN COORDINATION WITH THE LIGHT FIXTURE LAYOUT.
6. CONTRACTOR SHALL INCLUDE ACCESS PANELS IN BID. MECH. & ELECT. SUBS SHALL ESTIMATE QUANTITY REQ'D BASED ON DRYWALL CLG. LOCATIONS ON PLANS. ALL ACCESS PANELS SHALL BE FRAMELESS W/CONCEALED HINGES.
7. CONTRACTOR'S SUPER SHALL SCHEDULE A JOB SITE MEETING WITH BOTH BLDG. & FIRE INSPECTORS FOR PRELIMINARY APPROVAL OF ALL MECH. & ELECT. PANELS, LIFE SAFETY SPEAKER, STROBE & SMOKE DETECTOR LOCATIONS TWO (2) DAYS PRIOR TO ROUGH-OUT INSTALL. ADVISE ARCHITECT OF ANY ADDITIONS OR RELOCATIONS REQUIRED BY INSPECTORS PRIOR TO PROCEEDING WITH WORK.
8. WHERE CEILINGS ARE SPECIFIED TO BE FIRE-RATED CONSTRUCTION, ALL RECESSED LIGHT FIXTURES & SPEAKERS SHALL BE BOXED OUT ABOVE THE CEILING WITH FIRE-RATED ENCLOSURE EQUAL TO THE RATING OF THE CEILING.
9. PROVIDE SEISMIC CEILING GRID BRACING AS REQUIRED BY LOCAL CODES.
10. SWITCHES & MOTION SENSORS (IF ANY) SHALL BE INSTALLED AT 42" A.F.F. TO CENTER AND AT 6" OFF DOOR JAMBS OR SIDELIGHTS, U.O.N.
11. ANY TIME THE BUILDING OR A PORTION OF THE BUILDING IS OCCUPIED, THE MEANS OF EGRESS SERVING THE OCCUPIED PORTION SHALL BE ILLUMINATED AT AN INTENSITY OF NOT LESS THAN 1-FOOT-CANDLE (11 LUX) AT THE WALKING SURFACE LEVEL.
12. THE POWER SUPPLY FOR THE MEANS OF EGRESS ILLUMINATION SHALL BE PROVIDED BY THE PREMISE'S ELECTRICAL SUPPLY. IN THE EVENT OF POWER SUPPLY FAILURE, ILLUMINATION SHALL BE AUTOMATICALLY PROVIDED FROM AN EMERGENCY SYSTEM FOR THE FOLLOWING AREAS:
    a. AISLES AND UNENCLOSED EGRESS STAIRWAYS IN ROOMS AND SPACES THAT REQUIRE TWO OR MORE MEANS OF EGRESS.
    b. CORRIDORS, EXIT ENCLOSURES AND EXIT PASSAGEWAYS IN BUILDINGS REQUIRED TO HAVE TWO OR MORE EXITS.
    c. EXTERIOR EGRESS COMPONENTS AT OTHER THAN THE LEVEL OF EXIT DISCHARGE UNTIL EXIT DISCHARGE IS ACCOMPLISHED FOR BUILDINGS TO HAVE TWO OR MORE EXITS.
    d. INTERIOR EXIT DISCHARGE ELEMENTS, AS PERMITTED IN SECTION 1027.1, IN BUILDINGS REQUIRED TO HAVE TWO OR MORE EXITS.
    e. EXTERIOR LANDINGS, AS REQUIRED BY SECTION 1008.1.6, FOR EXIT DISCHARGE DOORWAYS IN BUILDING REQUIRED TO HAVE TWO OR MORE EXITS.
13. EXIT SIGNS SHALL BE INTERNALLY OR EXTERNALLY ILLUMINATED WHEN THE FACE OF AN EXIT SIGN IS ILLUMINATED FROM AN EXTERNAL SOURCE, IT SHALL HAVE AN INTENSITY OF NOT LESS THAN 5-FOOT CANDLE FROM EITHER OF THE TWO ELECTRIC LAMPS. INTERNALLY ILLUMINATED SIGNS SHALL PROVIDE EQUIVALENT LUMINANCE AND BE LISTED FOR THE PURPOSE.
14. PLENUM RATED WIRING TO BE PROVIDED. SEE ELECTRICAL PLANS.
15. PROVIDE EXIT SIGNS AND DIRECTIONAL EXIT SIGNS WITH MINIMUM 6" HIGH BY 3/4" STROKE BLOCK LETTER ON A CONTRASTING BACKGROUND. SPACING BETWEEN SIGNS SHALL NOT EXCEED 100 FEET.
16. UNDERSIDE OF EXIT SIGNS MUST BE 7'-0" CLEAR.
17. THE EXIT SIGNS SHALL BE CONNECTED TO AN EMERGENCY ELECTRICAL SYSTEM WHICH IS TO PROVIDE CONTINUED ILLUMINATION FOR A DURATION OF NOT LESS THAN 1-1/2 HOUR IN CASE OF PRIMARY POWER LOSS. CONTINUED ILLUMINATION IS TO BE PROVIDED FROM STORAGE BATTERIES, UNIT EQUIPMENT, OR AN ON-SITE GENERATOR AND THE INSTALLATION OF THE EMERGENCY POWER SYSTEM SHALL BE INSTALLED IN ACCORDANCE WITH CHAPTER 27.
18. EMERGENCY LIGHTING FACILITIES SHALL BE ARRANGED TO PROVIDE INITIAL ILLUMINATION THAT IS AT LEAST AN AVERAGE ON 1-FOOT-CANDLE (11 LUX) AN A MINIMUM AT ANY POINT OF 0.1-FOOT-CANDLE (1 LUX) MEASURED ALONG THE PATH OF EGRESS AT FLOOR LEVEL. A MAXIMUM-TO-MINIMUM ILLUMINATION UNIFORMITY RATIO OF 40 TO 1 SHALL NOT BE EXCEEDED.
19. INTERNALLY ILLUMINATED SIGNS SHALL BE LISTED AND LABELED AND SHALL BE INSTALLED IN ACCORDANCE WITH THE MANUFACTURER'S INSTRUCTIONS AND SECTION 2702.
20. EXIT SIGNS SHALL BE ILLUMINATED AT ALL TIMES.
21. EGRESS DOORS SHALL BE READILY OPENABLE FROM THE EGRESS SIDE WITHOUT THE USE OF A KEY OR SPECIAL KNOWLEDGE OR EFFORT. SEE 1008.1.9.3 FOR EXCEPTIONS.
22. DOOR HANDLES LOCK AND OTHER OPERATNG DEVICES SHALL BE INSTALLED AT A MIN. 34" AND MAX. 48" ABOVE THE FINISHED FLOOR.
23. EXIT DOORS SHALL REMAIN UNLOCKED WHEN BUILDING IS OCCUPIED.
24. ALL EGRESS DOOR OPERATION SHALL ALSO COMPLY WITH SECTION 1008.1.9 – 1008.1.9.8
25. THE MEANS OF EGRESS, INCLUDING THE EXIT DISCHARGE, SHALL BE ILLUMINATED AT ALL TIMES THE BUILDING SPACE SERVED BY THE MEANS OF EGRESS IS OCCUPIED.
26. THE MEANS OF EGRESS ILLUMINATION LEVEL SHALL NOT BE LESS THAN 1 FOOT-CANDLE AT THE WALKING SURFACE.
27. THE EMERGENCY POWER SYSTEM SHALL PROVIDE POWER FOR A DURATION OF NOT LESS THAN 90 MINUTES AND SHALL CONSIST OF STORAGE BATTERIES, UNIT EQUIPMENT OR AN ON-SITE GENERATOR. THE INSTALLATION OF THE EMERGENCY POWER SYSTEM SHALL BE IN ACCORDANCE WITH SECTION 2702.

LEGEND

NEW 2'x4' GRID SEE DETAILS (1/D4.0) (2/D4.0) (3/D4.0) (4/D4.0) (5/D4.0)

TILES:
FINE FISSURED HIGH NRC/CAC

NEW GYP. BD. SOFFIT OR CEILING
REFER TO PLAN FOR CEILING HEIGHTS. SEE DET. (6/D4.0)

(X'-X") FINISH CEILING HEIGHT

(EX.) EXISTING PLASTER CLG. (VIF.)

EXHAUST DUCT, REFER TO MECHANICAL DWGS.

RETURN DUCT, REFER TO MECHANICAL DWGS.

SUPPLY DUCT, REFER TO MECHANICAL DWGS.

FIXTURE SYMBOLS

L — ISOLIT ELT SERIES CLEAR W/ WHITE TRIM & GREEN LETTERS EXIT LIGHT PER ELEC. PLANS COMPLIANCE WITH BLDG. CODE SEC. 1003.2.8.1. SURFACE MTD.; (L) SELF-ILLUMINATED LOW LEVEL EXIT SIGN PROVIDED CONJUNCTION WITH EXIT SIGNAGE PACKAGE (WHERE SHOWN)

INTERNALLY ILLUMINATED FLOOR LEVEL EXIT SIGN PROVIDED IN ALL INTERIOR CORRIDORS (1011.6)

EXT A — LED WALL MOUNTED LIGHT; BY WAC LIGHTING
WP-LED335-50-WT

EXT E — EXTERIOR POLE MOUNTED FIXTURE WITH 1-HEAD; BY DECO LIGHTING
D824-LED-30/28W-50-UNV-LP-T5-PM-SL

EXTERIOR POLE FOR FIXTURE WITH 1-HEAD; BY DECO LIGHTING
DP45-S-12-DM1-SLV

B — 13"x4' SURFACE MOUNTED LED LIGHT FIXTURE; BY LAMAR LIGHTING
VGAL SERIES- 48-L-40

E-X — 4"x8' SURFACE MOUNT LED LIGHT FIXTURE; BY FOCAL POINT
SEEM 4 LED: FSM4LS-FL-625LF-1C-UNV-LD1-SM-WH-8'

4"x4' SURFACE MOUNT LED LIGHT FIXTURE; BY FOCAL POINT
SEEM 4 LED: FSM4LS-FL-625LF-1C-UNV-LD1-SM-WH-4'

REFLECTED CEILING PLAN NOTES

1. (2) LAYERS OF 5/8" GYP. BD. APPLIED TO UNDERSIDE OF FRAMING. 1 HOUR FIRE RATING REF. GA FILE NO. FC 5513 AT 1ST FLOOR AND FC 5407 AT ROOF. PAINT EXPOSED GYP. BD. FACE WHICH IS ATTACHED TO THE UNDERSIDE OF FRAMING ABOVE. SEE SHEET "A1.5" FOR PAINT COLOR.
2. DRYWALL SOFFIT AT +8'-0" AFF. WITH RECESSED ROLL-DOWN DOOR. SEE DETAIL (1/D5.0)
3. NOT USED
4. PROVIDE GYP. BD. HEADER AT 10'-0"AFF. SEE SHEET "A1.5" FOR PAINT COLOR.
5. GYP. CLG.
6. STUCCO CANOPY SOFFIT

6A. METAL PANEL, SEE SECTION 1/A5.4

7. DRINKING FOUNTAIN ALCOVE. ALCOVE TO HAVE A SUSPENDED GYP. BD. CEILING AT 7'-0" AFF. SEE DETAIL (5/A8.0)
8. EXPOSED, NO CEILING
9. PRE-FAB CANOPY

FRANCO ARCHITECTS INC.
12345 Ventura Blvd. H
Studio City, CA 91604
Tel 818 754-2030
Fax 818 754-2032
Architecture and Planning

MAGNOLIA SCIENCE ACADEMY

18220 SHERMAN WAY, RESEDA, CA91335

REV	DESCRIPTION	DATE
	PLAN CHECK #1	6/14/2017

LICENSED ARCHITECT
JOHANN D. WANG
C27010
4/30/2019
RENEWAL DATE
STATE OF CALIFORNIA

PROJECT
MAGNOLIA SCIENCE ACADEMY

PROJECT ADDRESS
18220 SHERMAN WAY,
RESEDA, CA91335

DRAWING TITLE
ROOF PARTIAL
REFLECTED CEILING
PLAN

DRAWN BY
ISSUE DATE
6/14/2017

JOB NUMBER
DRAWING SCALE
AS NOTED

APPROVED BY:

DRAWING NUMBER
A3.2

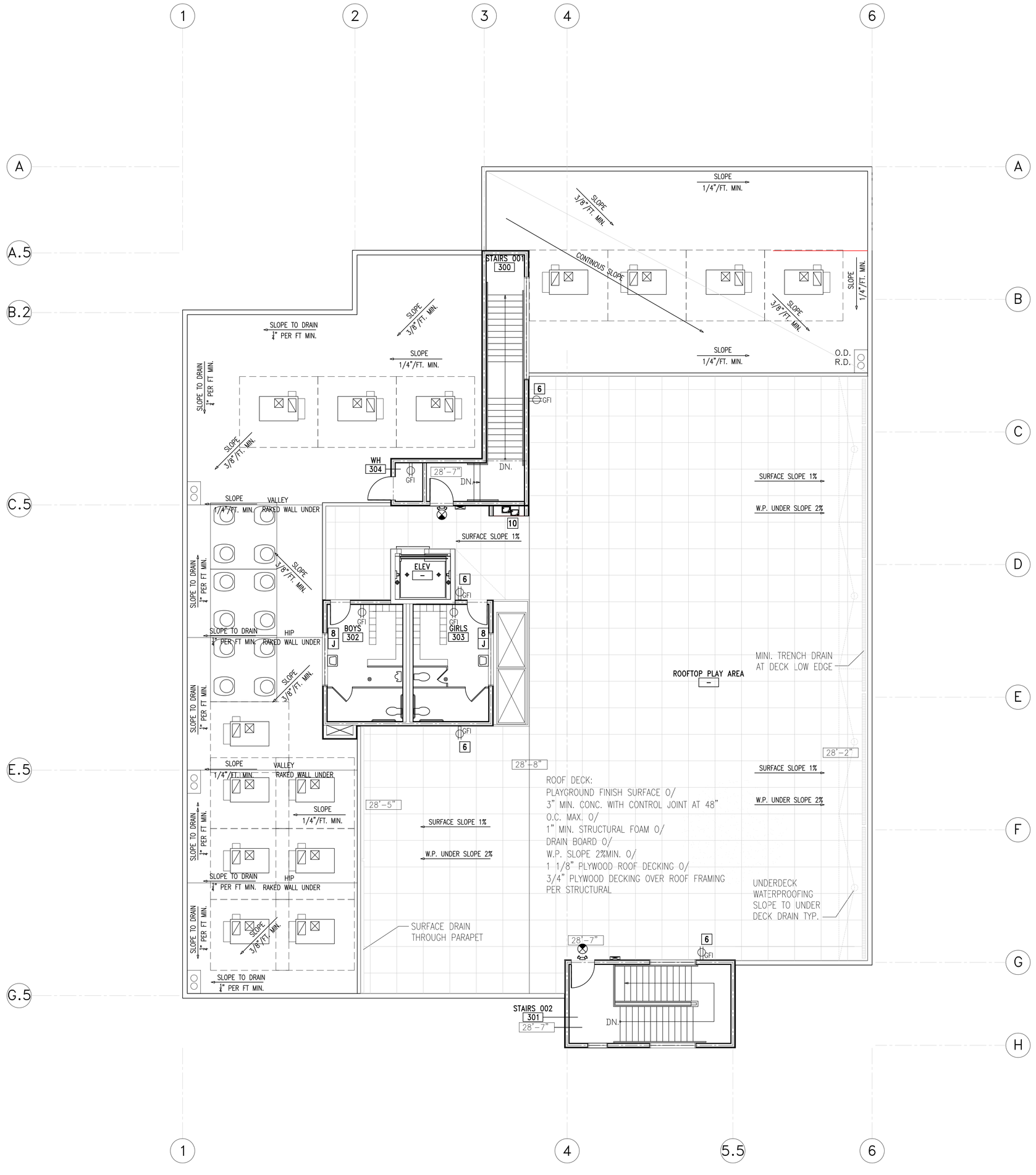

ROOF POWER & SIGNAL PLAN

SCALE: 1/8" = 1'-0"

LEGEND

- FLOOR FLUSH MOUNTED DATA
- FLOOR FLUSH MOUNTED POWER OUTLET
- WALL MOUNTED FOURPLEX OUTLET
- WALL MOUNTED DUPLEX OUTLET
- WALL MOUNTED DEDICATED 220 CIRCUIT OUTLET
- CEILING MOUNTED DUPLEX OUTLET
- DEDICATED OUTLETS. SEE ELECTRICAL
- WALL MOUNTED DATA/VOICE – (1) DATA, (1) VOICE
- WALL MOUNTED PHONE OUTLET – (1) VOICE
- J – J-BOX
- GFI – GFI– GROUNDED OUTLET
- X" – X" ABOVE FINISHED FLOOR
- SC – SEPARATE CIRCUIT
- DB – DOOR BUZZER
- WP – WIRELESS ACCESS POINTS PROVIDED BY OWNER'S DATA VENDOR
- QUAD RECEPTACLE W/ 2 DEDICATED OUTLETS
- J – JUNCTION BOX FOR ELECTRICAL POWERED HAND DRYER, 20A CIRCUIT; DRYER SHALL BE AMERICAN DRYER INC. EXTREMEAIR EXT7-SS.

POWER AND SIGNAL PLAN NOTES

1. IN ALL THE CLASSROOMS, AT EACH FOURPLEX OUTLETS PROVIDE A 1-1/2" CONDUIT FOR DATA.
2. IN ALL THE CLASSROOMS, PROVIDE A DEDICATED CIRCUIT FOR EVERY TWO FOURPLEX OUTLETS.
3. MDF ROOM: PROVIDE 3/4" FIRE TREATED PLYWOOD ON ALL WALLS; PROVIDE (2) DEDICATED 20A DUPLEX RECEPTACLES, EACH ON A SEPARATE CIRCUIT. A DEDICATED 1.5 TON AC UNIT TO BE PROVIDED FOR THIS ROOM. CONTRACTOR TO COORDINATE AND CONFIRM ELECTRICAL REQUIREMENTS WITH CLIENT'S IT PROVIDER.
4. PROVIDE POWER FOR FIRE RATED MOTORIZED ROLL-DOWN COUNTER DOOR PER MANUFACTURER'S RECOMMENDATIONS. SEE COOKSEN MOTOR-OPERATED COUNTER DOOR (OR EQUAL), COLORCOTE FINISH; BETWEEN JAMB MOUNTED; FEATHEREDGE. SEE 1/D5.0
5. LOCATE FIRE ALARM CONTROL PANEL IN ELECTRICAL ROOM
6. PROVIDE LOCKABLE COVER PLATES FOR ALL EXTERIOR OUTLETS.
7. PROVIDE POWER FOR INSTA-HOT WATER HEATER AND GARBAGE DISPOSAL. REFER TO PLUMBING PLANS FOR SPECIFICATION.
8. ELECTRIC POWERED HAND DRYER.
9. NOT USED
10. PROVIDE POWER FOR INTERIOR DRINKING FOUNTAIN. REFER TO PLUMBING ENGINEERING DWGS. FOR SPECS.
11. PROVIDE DEDICATED ELECTRICAL OUTLET FOR COPIER.
12. PROVIDE POWER/CONNECTION FOR HOT WATER HEATER WITHIN JANITOR'S CLOSET. REFER TO PLUMBING ENGINEERING DWGS. FOR SPECS.
13. PROVIDE DOOR BUZZER AND COMUNICATION DEVICE WITH CONDUIT TO MAIN GATE ENTRANCE

CA GREEN CODE NOTES

1. PRIOR TO PERMIT BEING FINALED, A COMPLETE REPORT OF THE TESTING AND ADJUSTING SHALL BE PROVIDED TO THE OWNER OR OWNER'S REPRESENTATIVE AND FORM 5.410 – TESTING AND ADJUSTING SHALL BE COMPLETED AND PROVIDED TO THE INSPECTOR. (CAL GREEN 5.410.4)
2. PRIOR TO PERMIT BEING FINALED, A COMPLETE REPORT OF THE COMMISSIONING PROCESS SHALL BE PROVIDED TO THE OWNER OR OWNER'S REPRESENTATIVE AND FORM 5.410 – VERIFICATION SHALL BE COMPLETED AND PROVIDED TO THE INSPECTOR. (CAL GREEN 5.410.2)
3. BUILDING MUST COMPLY WITH THE STATE'S 2008 MANDATORY ENERGY EFFICIENCY STANDARDS. SUBMIT TO MECHANICAL SECTION AND THE ELECTRICAL SECTION FOR REVIEW AND APPROVAL OF ENERGY EFFICIENCY COMPLIANCE. (5.201.1)

FRANCO ARCHITECTS INC.
12345 Ventura Blvd. H
Studio City, CA 91604
Tel 818 754-2030
Fax 818 754-2032
Architecture and Planning

MAGNOLIA SCIENCE ACADEMY
18220 SHERMAN WAY, RESEDA, CA91335

REV	DESCRIPTION	DATE
	PLAN CHECK #1	6/14/2017

LICENSED ARCHITECT
JOHANN D. WANG
C27010
4/30/2019
RENEWAL DATE
STATE OF CALIFORNIA

PROJECT
MAGNOLIA SCIENCE ACADEMY

PROJECT ADDRESS
18220 SHERMAN WAY,
RESEDA, CA91335

DRAWING TITLE
ROOF
POWER & SIGNAL
PLAN

DRAWN BY
ISSUE DATE 6/14/2017
JOB NUMBER
DRAWING SCALE AS NOTED
APPROVED BY:

DRAWING NUMBER
A3.3

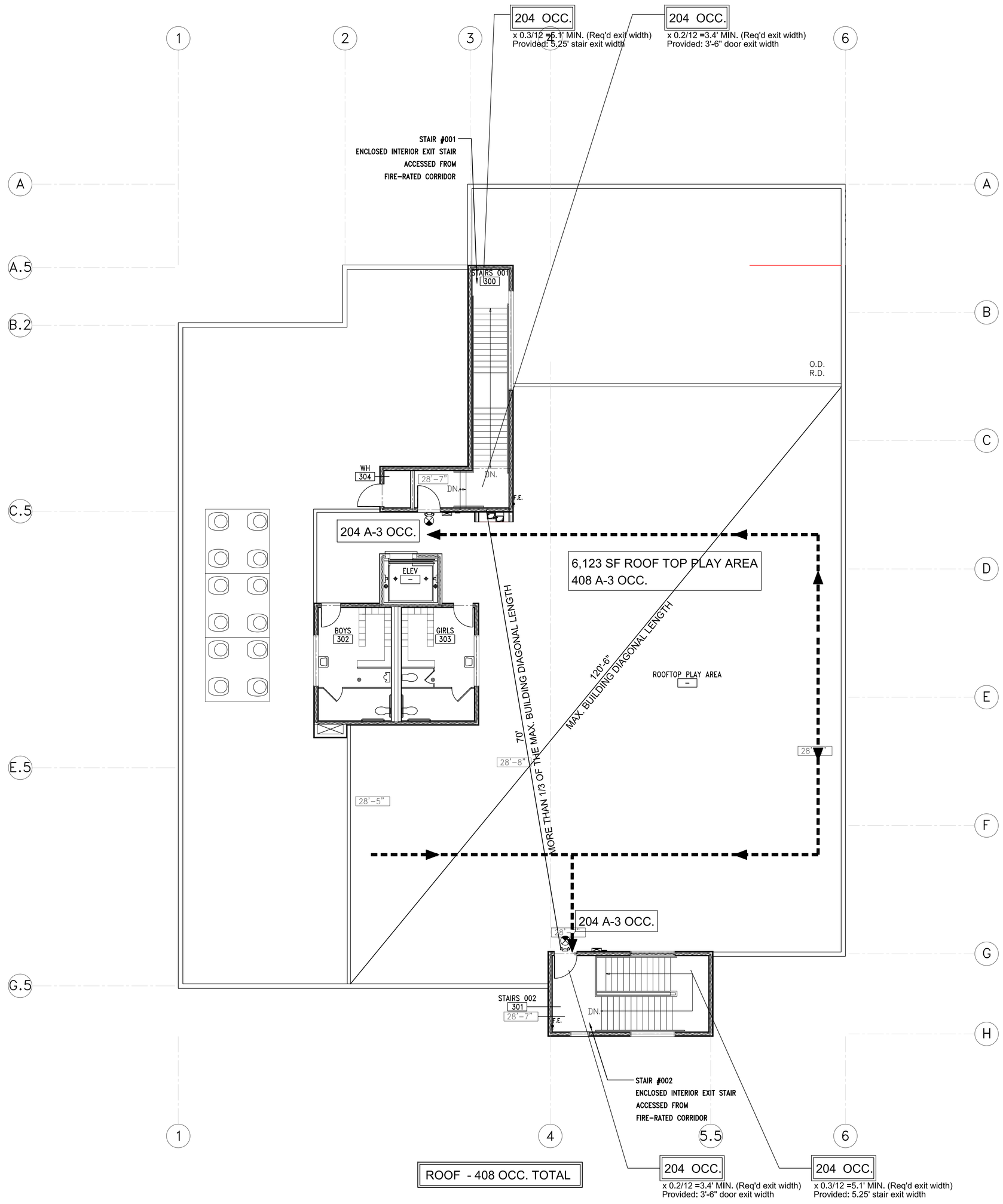

ROOF EXITING PLAN

SCALE: 1/8" = 1'-0"

FURNITURE PLAN LEGEND

LEGEND

48" / 30" — 30"x48" HC ACCESS MINIMUM KNEE CLEARANCE 27"H X 30"W X 11"D

WB WB — (2) 4'H. X 6'W. WHITEBOARDS SUPPLIED AND INSTALLED BY GENERAL CONTRACTOR

WHITEBOARD SPECIFICATION:
MANUFACTURER: ABC SCHOOL EQUIPMENT. INC. OR EQUAL
SIZE: 4' H. X 6' W.
COLOR: 454 BRIGHT WHITE

FURNITURE PLAN NOTES

1. FURNITURE TO BE SUPPLIED AND INSTALLED BY TENANT.
2. SEE SHEET A0.3 FOR ADA REQUIREMENTS REGARDING "SPACE ALLOWANCE AND REACH RANGES."

FURNITURE PLAN – GENERAL NOTES

1. VENDING MACHINES SHALL BE INSTALLED IN COMPLIANCE WITH SECTIONS 11B-206, 11B-305, 11B-308 AND 11B-309.
2. UNLESS AN ATTENDANT IS AVAILABLE TO ASSIST PERSONS WITH DISABILITIES, ALL BOOK SHELVING SHALL BE LOCATED NOT MORE THAN 54" ABOVE THE FLOOR.
3. THE TOP OF THE TABLES AND COUNTERS SHALL BE 28" TO 34" FROM THE FLOOR OR GROUND.
4. GC TO PROVIDE WHITEBOARDS. SEE SPECIFICATION.
5. A MINIMUM KNEE CLEARANCE OF 27"H X 30"W X 19"D SHALL BE PROVIDED AT ALL DESKS AND TABLETOPS.
6. NOTE: GENERAL EMPLOYEE AREAS ARE "THOSE AREAS COMMONLY USED BY MULTIPLE EMPLOYEES, SUCH AS RESTROOMS, BREAK ROOMS, CONFERENCE AND MEETING SPACE, ETC." EVEN WHEN THESE AREAS ARE RESTRICTED FOR EMPLOYEE USE ONLY, THEY COMPLY WITH TITLE 24 ACCESSIBILITY REQUIREMENTS.
7. NOTE: SPECIFIC WORK STATIONS IS INTENDED TO MEAN "PLACES WHERE INDIVIDUALS DO THEIR WORK, SUCH AS CHEF'S CHOPPING BLOCK IN A COMMERCIAL RESTAURANT OR A COMPUTER TERMINAL IN AN OFFICE." THESE WORK STATIONS ARE NOT REQUIRED TO BE ACCESSIBLE THEMSELVES, EXCEPT THAT AISLE AND FLOOR AND LEVEL REQUIREMENTS MUST BE MET AND ENTRYWAYS MUST BE AT LEAST 32" IN CLEAR WIDTH.
8. COMMON USE CIRCULATION PATHS WITHIN EMPLOYEE WORK AREAS SHALL COMPLY WITH SECTION 11B-402. 11B206.2.8 EXCEPTION: 2. COMMON USE CIRCULATION PATHS LOCATED WITHIN EMPLOYEE WORK AREAS THAT ARE AN INTEGRAL COMPONENT OF WORK AREA EQUIPMENT SHALL NOT BE REQUIRED TO COMPLY WITH 11B-402.
   3. COMMON USE CIRCULATION PATHS LOCATED WITHIN EXTERIOR EMPLOYEE WORK AREAS THAT ARE FULLY EXPOSED TO THE WEATHER SHALL NOT BE REQUIRED TO COMPLY WITH 11B-402.
9. SECTION 11B-403 WALKING SURFACE, AND 11B-904 CHECK OUT AISLES AND SALES AND SERVICE COUNTER.
10. 403.5 CLEARANCES. WALKING SURFACES SHALL PROVIDE CLEARANCES COMPLYING WITH SECTION 11B-403.5.

EXITING PLAN LEGEND & NOTES

LEGEND

EXITING PATH

XX' — EXITING PATH DISTANCE (IN FEET)

ONE HOUR RATED CORRIDOR

- - OCC. — OCCUPANCY COUNT (SEE BUILDING LIMITATIONS PLAN 1/A0.4 FOR OCCUPANCY TYPE AND CALCULATIONS)

EXIT/COMBO LIGHT PER ELECTRICAL FIXTURE SCHEDULE. COMPLIANCE WITH BLDG. CODE SEC. 1011.4. SURFACE MTD.; (L) SELF-ILLUMINATED LOW LEVEL EXIT SIGN PROVIDED CONJUNCTION WITH EXIT SIGNAGE PACKAGE (WHERE SHOWN)

FLOOR LEVEL EXIT SIGN

F.E. — SEMI-RECESSED FIRE EXTINGUISHERS SEE SPECIFICATIONS AND DETAIL 1/D5.0 8/D5.0

EXITING PLAN – GENERAL NOTES

1. FULLY SPRINKLERED OCCUPANCY E MAX. ALLOWABLE TRAVEL DISTANCE IS 250'-0". ALL TRAVEL DISTANCES SHOWN ABOVE FALL UNDER 250'-0".
2. FULLY SPRINKLERED OCCUPANCY B MAX. ALLOWABLE TRAVEL DISTANCE IS 300'-0". ALL TRAVEL DISTANCES SHOWN ABOVE FALL UNDER 300'-0".
3. REFER TO THE BUILDING LIMITATIONS SHEET "A0.4" FOR INDIVIDUAL ROOM CALCULATIONS AND SQUAREFOOTAGES.
4. WHERE TWO OR MORE EXITS ARE REQUIRED, AT LEAST TWO EXITS MUST BE SEPARATED BY (HALF) (1/3) THE MAX. DIAGONAL LENGTH OF THE AREA SERVED. (1015.2.1)
5. THE EXIT PATH SHALL BE IDENTIFIED BY EXIT SIGNS CONFORMING TO THE REQUIREMENTS OF SECTION 1011. EXIT SIGNS SHALL BE READILY VISIBLE FROM ANY DIRECTION OF APPROACH. EXIT SIGNS SHALL BE LOCATED AS NECESSARY TO CLEARLY INDICATE THE DIRECTION OF EGRESS TRAVEL. NO POINT SHALL BE MORE THAN 100 FEET FROM THE NEAREST VISIBLE SIGN. (1011).
6. PROVIDE FLOOR-LEVEL EXIT SIGNS IN ALL INTERIOR CORRIDORS OF GROUP A, E, OCCUPANCIES. (1011.6)
7. PRIMARY STRUCTURAL FRAME TO BE 1-HOUR RATED CONSTRUCTION.
8. LOAD BEARING WALLS (EXTERIOR AND INTERIOR) TO BE 1 HOUR RATED CONSTRUCTION. (SEE SHEETS A1.1 AND A2.1 FOR WALL TYPES.)
9. ROOF CONSTRUCTION AND SECONDARY MEMBERS TO BE 1 HOUR RATED CONSTRUCTION.
10. PER SEC. 709.1-4 AND TABLE 1018.1, CORRIDOR WALLS SHALL HAVE A 1 HOUR FIRE PARTITION.
11. FLOOR CONSTRUCTION AND SECONDARY MEMBERS TO BE 1 HOUR RATED CONSTRUCTION. FLOOR/CEILING ASSEMBLY PROVIDED IS PER ITEM #26-1.1 IN TABLE 702.1(3) IN CBC 2010.
12. FIRE-RESISTANCE-RATED CORRIDORS SHALL BE CONTINUOUS FROM THE POINT OF ENTRY TO AN EXIT, AND SHALL NOT BE INTERRUPTED BY INTERVENING ROOMS. (1018.6)
    EXCEPTION #1: FOYERS, LOBBIES OR RECEPTION ROOMS CONSTRUCTED AS REQUIRED FOR CORRIDORS SHALL NOT BE CONSTRUED AS INTERVENING ROOMS.

FIRE DEPARTMENT – GENERAL NOTES

1. COMPLY WITH POSTING OF ROOM CAPACITY. FIRE CODE 2501.16.1 TITLE 24, SECTION 1004.3. (SUBJECT TO FIELD INSPECTION APPROVAL.)
2. THE MEANS OF EGRESS, AND EXIT DISCHARGE, SHALL BE ILLUMINATED AT ANY TIME THE BUILDING IS OCCUPIED WITH A LIGHT INTENSITY OF NOT LESS THAN 1 FOOT-CANDLE AT THE WALKING SURFACE LEVEL. BUILDING CODE 1006.2
3. EXITS, EXIT ACCESS DOORS AND PATHS OF EGRESS TRAVEL THAT IS NOT IMMEDIATELY VISIBLE TO THE OCCUPANTS SHALL BE MARKED BY AN APPROVED EXIT SIGN THAT IS READILY VISIBLE FROM ANY DIRECTION OF EGRESS TRAVEL. EXIT SIGNS SHALL BE INTERNALLY OR EXTERNALLY ILLUMINATED. BUILDING CODE 1011
   NOTE: ADDITIONAL EXIT SIGNS MAY BE REQUIRED AT TIME OF FIELD INSPECTION.
4. PROVIDE LOW-LEVEL EXIT SIGNS PER TITLE 24, 1011.6.
5. PORTABLE FIRE EXTINGUISHERS SHALL BE INSTALLED IN LOCATIONS AS REQUIRED BY FIRE CODE 906.
6. PROVIDE AN AUTOMATIC SPRINKLER SYSTEM.
7. EVERY ROOM OR SPACE THAT IS AN ASSEMBLY OCCUPANCY SHALL HAVE THE OCCUPANT LOAD OF THE ROOM OR SPACE POSTED IN A CONSPICUOUS PLACE, NEAR THE MAIN EXIT OR EXIT ACCESS DOORWAY FROM THE ROOM OR SPACE. POSTED SIGNS SHALL BE OF AN APPROVED LEGIBLE PERMANENT DESIGN AND SHALL BE MAINTAINED BY THE OWNER OR AUTHORIZED AGENT. BUILDING CODE 1004.3. FIRE CODE 1004.3.
8. WHERE EXIT SIGNS ARE REQUIRED, ADDITIONAL APPROVED FLOOR-LEVEL EXIT SIGNS WHICH ARE INTERNALLY OR EXTERNALLY ILLUMINATED, PHOTO LUMINESCENT OR SELF-LUMINOUS SHALL BE PROVIDED IN ALL INTERIOR CORRIDORS. BUILDING CODE 1011.6. FIRE CODE 1011.6.

FRANCO ARCHITECTS INC.
12345 Ventura Blvd. H
Studio City, CA 91604
Tel 818 754-2030
Fax 818 754-2032
Architecture and Planning

MAGNOLIA SCIENCE ACADEMY
18220 SHERMAN WAY, RESEDA, CA91335

REV	DESCRIPTION	DATE
	PLAN CHECK #1	6/14/2017

LICENSED ARCHITECT
JOHANN D. WANG
C27010
4/30/2019
RENEWAL DATE
STATE OF CALIFORNIA

PROJECT
MAGNOLIA SCIENCE ACADEMY

PROJECT ADDRESS
18220 SHERMAN WAY,
RESEDA, CA91335

DRAWING TITLE
ROOF EXITING PLAN

DRAWN BY
ISSUE DATE 6/14/2017
JOB NUMBER
DRAWING SCALE AS NOTED
APPROVED BY:

DRAWING NUMBER
A3.4

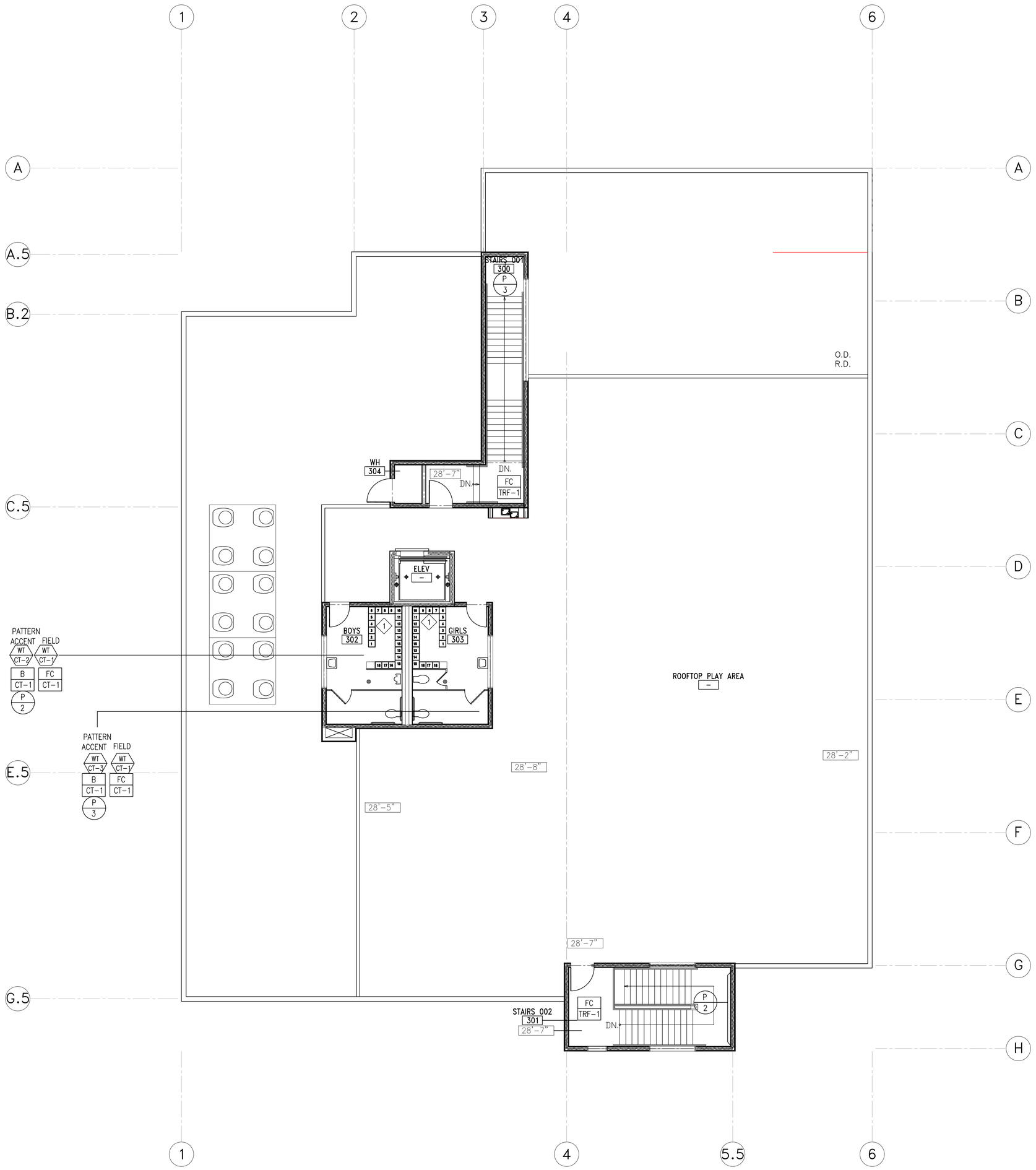

ROOF FINISH PLAN

SCALE: 1/8" = 1'-0"

FINISH NOTES

1. CONTRACTOR SHALL SUBMIT 8"x8" SAMPLES OF ALL FINISHES TO ARCHITECT FOR APPROVAL, AT LEAST 2 WEEKS PRIOR TO INSTALL.
2. CONTRACTOR SHALL FOLLOW ALL MANUFACTURERS RECOMMENDATIONS & INSTRUCTIONS FOR THE INSTALL. OF ANY FINISHES OR PRODUCTS.
3. ALL MATERIAL AND ITS INSTALLATION SHALL COMPLY W/ ALL BUILDING FIRE & ADA CODES IN EFFECT IN THE CITY OF LOS ANGELES.
4. U.O.N. ALL ACCESS DOORS & PANELS SHALL BE PAINTED TO MATCH ADJ. SURFACE COLOR & FINISH.
5. G.C. AND THEIR SUBS SHALL BE RESPONSIBLE FOR ANY WALLCOVERING INSTALLATIONS.
6. ALL PRIMING & OR SIZING OF WALLS TO RECEIVE WALLCOVERING SHALL BE DONE BY THE SUB CONTRACTOR INSTALLING THE WALLCOVERING.
7. CONTRACTOR SHALL SUBMIT A CARPET SEAMING DIAGRAM & DIRECTION OF CARPET TO ARCHITECT AT LEAST 2 WEEKS PRIOR TO INSTALL.
8. FLOORING SUB SHALL PRE-INSPECT EXIST. FLOOR SLAB TO CHECK FOR CRACKS & UNEVENNESS. FLOAT FLOORS FOR PROPER INSTALLATIONS OF FLOOR FINISHES AS REQ'D. CONTRACTOR SHALL INCLUDE ALL COSTS TO PROPERLY PREPARE SLAB FOR SPECIFIED FINISH.
9. NO SUBSTITUTIONS OF FINISHES SHALL BE MADE W/OUT PRIOR WRITTEN APPROVAL FROM ARCHITECT.
10. PAINT INSIDE FACE OF ANY LIGHT COVES FLAT FINISH.
11. ALL DRYWALL CEILINGS SHALL BE PREPPED TO RECEIVE FLAT LATEX PAINT FINISH WITHOUT ANY APPARENT SEAMS OR IMPERFECTIONS.
12. CABINET SUB CONTRACTOR SHALL BE RESPONSIBLE FOR ALL FINISHES ON CABINETRY AS SHOWN ON MILLWORK PLANS.
13. WASH ALL REMAINING FLOORING.
14. INTERIOR FINISH SHALL BE PROVIDED IN ACCORDANCE TO TITLE 24, SECTION 804, AS FOLLOWS: CLASS I-VERTICAL ENCLOSURES; CLASS II-CORRIDORS; CLASS III-ROOMS.
    ALL DRAPES, HANGINGS, CURTAINS, DROPS AND ALL OTHER DECORATIVE MATERIAL TO COMPLY WITH FIRE CODE SECTION 1103.3.3.
16. PROVIDE ANTI-GRAFFITI FINISH AT THE FIRST 9 FEET, MEASURED FROM GRADE, AT EXTERIOR WALLS AND DOORS. (PAINTED SURFACE – LARR #25601T, UNFINISHED SURFACE – LARR #252861)
17. INTERIOR WALL AND CEILING FINISHES SHALL BE PROVIDED IN ACCORDANCE WITH BUILDING CODE 801 AND TABLE 803.9.
18. CURTAINS, DRAPERIES, HANGINGS AND OTHER DECORATIVE MATERIALS SUSPENDED FROM WALLS OR CEILINGS SHALL MEET THE FLAME PROPAGATION PERFORMANCE CRITERIA OF NFPA 701, IN ACCORDANCE WITH BUILDING CODE 806.2 OR BE NONCOMBUSTIBLE. BUILDING CODE 806.1.
19. ALL FLOORING TO BE SLIP-RESISTANT PER ADA CODE
20. TOILET ROOM FLOORS SHALL HAVE A SMOOTH, HARD NON ABSORBENT SURFACE SUCH AS PORTLAND CEMENT, CERAMIC TILE OR OTHER APPROVED MATERIAL THAT EXTENDS UPWARD ONTO THE WALLS AT LEAST 4" (1210.2.1)
21. WALLS WITHIN 2 FEET (610 MM) OF THE FRONT AND SIDES OF URINALS AND WATER CLOSETS SHALL HAVE A SMOOTH, HARD NON-ABSORBENT SURFACE OF PORTLAND CEMENT, CONCRETE, CERAMIC TILE OR OTHER SMOOTH, HARD NON-ABSORBENT SURFACE TO A HEIGHT OF 4 FEET (1219 MM), AND EXCEPT FOR STRUCTURAL ELEMENTS, THE MATERIALS USED IN SUCH WALLS SHALL BE OF A TYPE THAT IS NOT ADVERSELY AFFECTED BY MOISTURE. (1210.2.2)
22. CEMENT, FIBER-CEMENT OR GLASS MAT GYPSUM BACKERS IN COMPLIANCE WITH ASTM C1178, C1288 OR C1325 SHALL BE USED AS A BASE FOR WALL TILE IN TUB AND SHOWER AREAS AND WALL AND CEILING PANELS IN SHOWER AREAS. WATER-RESISTANCE GYPSUM BACKING BOARD SHALL BE USED AS A BASE FOR TILE IN WATER CLOSET COMPARTMENT WALLS WHEN INSTALLED IN ACCORDANCE WITH GA-216 OR ASTM C840. REGULAR GYPSUM WALLBOARD IS PERMITTED UNDER TILE OR WALL PANELS IN OTHER WALL AND CEILING AREAS WHEN INSTALLED IN ACCORDANCE WITH GA-216 OR ASTM C840. WATER-RESISTANT GYPSUM BOARD SHALL NOT BE USED IN THE FOLLOWING LOCATIONS: SECTION 2506.1
    a. OVER A VAPOR RETARDER.
    b. IN AREAS SUBJECT TO CONTINUOUS HIGH HUMIDITY, SUCH AS SAUNAS, STEAM ROOMS OR GANG SHOWER ROOMS
    c. ON CEILINGS WHERE FRAME SPACING EXCEEDS 12 INCHES O.C. FOR 1/2 INCH THICK AND MORE THAN 16 INCHES O.C. FOR 5/8 INCH THICK.
23. EVERY SPACE INTENDED FOR HUMAN OCCUPANCY SHALL BE PROVIDED WITH NATURAL LIGHT BY MEANS OF EXTERIOR GLAZED OPENINGS IN ACCORDANCE WITH SECTION 1205.2 OR SHALL BE PROVIDED WITH ARTIFICIAL LIGHT THAT IS ADEQUATE TO PROVIDE AN AVERAGE ILLUMINATION OF 10 FOOT-CANDLES OVER THE AREA OF THE ROOM AT A HEIGHT OF 30 INCHES ABOVE THE FLOOR LEVEL. (1205.1 AND 1205.3)

FINISH PLAN NOTES

1. INTERIOR FINISH MATERIALS APPLIED TO WALL AND CEILING SHALL BE TESTED AS SPECIFIED IN SECTION 803. OF THE CBC.
2. IN JANITOR CLOSET INSTALL FRP 48" AFF AROUND MOP SINK, 24" AWAY FROM SINK ON BOTH SIDES.
3. PROVIDE A LEVEL "5" SMOOTH FINISH FOR ALL DRYWALL
4. EXTERIOR STUCCO TO BE TROWEL APPLIED. PROVIDE DUNNE EDWARDS ENDURALASTIC 10 ELASTOMERIC FLAT FINISH PRIOR TO APPLYING FINAL ACRIBOND FLAT PAINT COLOR.

CA GREEN CODE NOTES

ENVIRONMENTAL QUALITY

1. IF THE HVAC SYSTEM IS USED DURING CONSTRUCTION, PROVIDE RETURN AIR FILTERS WITH A MINIMUN EFFICIENCY REPORTING VALUE (MERV) \OF 8, BASED ON ASHRAE 52.2-1999, OR AN AVERAGE EFFICIENCY OF 30 PERCENT, BASED ON ASHRAE 52.1-1992. REPLACE ALL FILTERS PRIOR TO OCCUPANCY OTR AT THE CONCLUSION OF CONSTRUCTION.

2. AT THE TIME OF ROUGH INSTALLATION, OR DURING STORAGE ON THE CONSTRUCTION SITE AND UNTIL FINAL STARTUP OF THE HEATING AND COOLING EQUIPMENT, ALL DUCT AND OTHER RELATED AIR DISTRIBUTION COMPONENT OPENINGS SHALL BE COVERED WITH TAPE, PLASTIC, SHEET METAL, OR OTHER ACCEPTABLE METHODS TO REDUCE THE AMOUNT OR DUST OR DEBRIS WHICH MAY COLLECT IN THE SYSTEM." (5.504.3)

3. PROVIDE FINISH PLAN COMPLYING WITH THE FOLLOWING:
   a. ADHESIVES, SEALANTS AND CAULKS, PAINTS AND COATINGS, AND AEROSOL PAINTS AND COATINGS SHALL MEET OR EXCEED THE STANDARDS OUTLINED IN SECTIONS 5.504.4.1, 5.504.4.3, AND 5.504.4.3.1 RESPECTIVELY. VERIFICATION OF COMPLIANCE WITH THESE SECTIONS MUST BE PROVIDED AT THE TIME OF INSPECTION.

   b. ALL CARPET INSTALLED IN THE BUILDING INTERIOR SHALL MEET THE TESTING AND PRODUCT REQUIREMENTS OF ONE OF THE FOLLOWING: (5.504.4.4)
      I. CARPET AND RUG INSTITUTE'S GREEN LABEL PLUS PROGRAM OR
      II. CALIFORNIA DEPARTMENT OF PUBLIC HEALTH STANDARD PRACTICE FOR THE TESTING OF VOC'S (SPEC 01350) OR
      III. NSF/ANSI 140 AT THE GOLD LEVEL OR
      IV. SCIENTIFIC CERTIFICATIONS SYSTEMS SUSTAINABLE CHOICE

   c. ALL CARPET CUSHION INSTALLED IN THE BUILDING INTERIOR SHALL MEET THE REQUIREMENTS OF THE CARPET AND RUG INSTITUTE GREEN LABEL PROGRAM. CARPET ADHESIVES SHALL NOT EXCEED A VOC LIMIT OF 50 G/L. (5.504.4.4.1, 5.504.4.4.2)

   d. COMPOSITE WOOD PRODUCTS (HARDWOOD PLYWOOD, PARTICLE BOARD, AND MDF COMPOSITE WOOD) INSTALLED ON THE INTERIOR OR EXTERIOR OF THE BUILDING SHALL MEET OR EXCEED THE STANDARDS OUTLINED IN TABLE 5.504.4.5. (5.504.4.5)

   e. MINIMUM OF 50% OF FLOOR AREA RECEIVING RESILIENT FLOORING SHALL COMPLY WITH THE VOC EMISSION LIMITS DEFINED IN THE CHPS LOW-EMITTING MATERIALS LIST OR CERTIFIED UNDER THE RFCI FLOORSCORE PROGRAM. VERIFICATION OF COMPLIANCE WITH THESE SECTIONS MUST BE PROVIDED AT THE TIME OF INSPECTION. (5.504.4.6)

FINISH SPECIFICATIONS:

PAINT- INTERIOR

P 1
MFG.: DUNN EDWARDS
COLOR: DEW338 WHITE HEAT
FINISH: SEMI GLOSS
LOCATION: THROUGHOUT U.O.N.

P 2
MFG.: DUNN EDWARDS
COLOR: DET573 MOUNTAIN BLUEBIRD
FINISH: SEMI GLOSS
LOCATION: ACCENT- WHERE IS SPECIFIED

P 3
MFG.: DUNN EDWARDS
COLOR: DE5194 TANGERINE TANGO
FINISH: SEMI GLOSS
LOCATION: ACCENT- WHERE IS SPECIFIED

P 4
MFG.: DUNN EDWARDS
COLOR: DE6381 SILVER BULLET
FINISH: SEMI GLOSS
LOCATION: ACCENT- RESTROOMS

CERAMIC TILE (WALLS)

WT CT-1
MFG.: DALTILE
TYPE: SEMI-GLOSS
COLOR: 0135 ALMOND (1)
SIZE: 4"X 4"
LOCATION: RESTROOM WALLS (FIELD)

WT CT-2
MFG.: DALTILE
TYPE: SEMI-GLOSS
COLOR: 0049 OCEAN BLUE (4)
SIZE: 4"X 4"
LOCATION: RESTROOM WALLS (ACCENT)
SEE RESTROOM TILE PATTERN ELEVATION

WT CT-3
MFG.: DALTILE
TYPE: SEMI-GLOSS
COLOR: 0097 ORANGE BURST (4)
SIZE: 4"X 4"
LOCATION: RESTROOM WALLS (ACCENT)
SEE RESTROOM TILE PATTERN ELEVATION

CERAMIC TILE BASE

B CT-1
MFG.: DALTILE
TYPE: KEYSTONES
COLOR: D208 SUEDE GRAY SPECKLE
BUILT UP BASE MB-58
SIZE: 2" X 2"
LOCATION: RESTROOM WALLS

CERAMIC TILE (FLOOR)

FC CT-1
MFG.: DALTILE
TYPE: KEYSTONES
COLOR: D208 SUEDE GRAY SPECKLE
SIZE: 2" X 2"
LOCATION: RESTROOM FLOORS

TILE GROUT
MFG.: CUSTOM BUILDING PRODUCTS
COLOR: #101 QUARTZ
LOCATION: WALLS

MFG.: CUSTOM BUILDING PRODUCTS
COLOR: #19 PEWTER
LOCATION: FLOOR & WALL BASE ONLY

LOCKER SPECS:

1
MANUFACTURER: SALSBURY INDUSTRIES, LOCKERS:
TYPE: TRIPLE TIER STANDARD LOCKERS- FIVE FEET HIGH- THREE WIDE
DIMENSION: 12"W X 15"D- 66"H WITH LEGS
MODEL #/COLOR: 63355/ GRAY
OPTION: SLOPING HOOD, FROND AND END BASE
QUANTITY: 12 THREE WIDE

RESTROOM WALL DESIGN DETAIL- TYPICAL

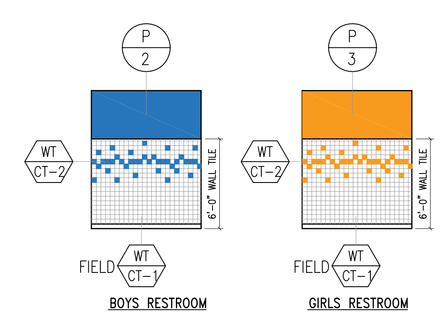

FRANCO ARCHITECTS INC.
12345 Ventura Blvd. H
Studio City, CA 91604
Tel 818 754-2030
Fax 818 754-2032
Architecture and Planning

MAGNOLIA SCIENCE ACADEMY
18220 SHERMAN WAY, RESEDA, CA91335

REV	DESCRIPTION	DATE
	PLAN CHECK #1	6/14/2017

LICENSED ARCHITECT
JOHANN D. WANG
C27010
4/30/2019
RENEWAL DATE
STATE OF CALIFORNIA

PROJECT
MAGNOLIA SCIENCE ACADEMY

PROJECT ADDRESS
18220 SHERMAN WAY,
RESEDA, CA91335

DRAWING TITLE
ROOF FINISH PLAN

DRAWN BY
ISSUE DATE 6/14/2017
JOB NUMBER
DRAWING SCALE AS NOTED
APPROVED BY:

DRAWING NUMBER
A3.5

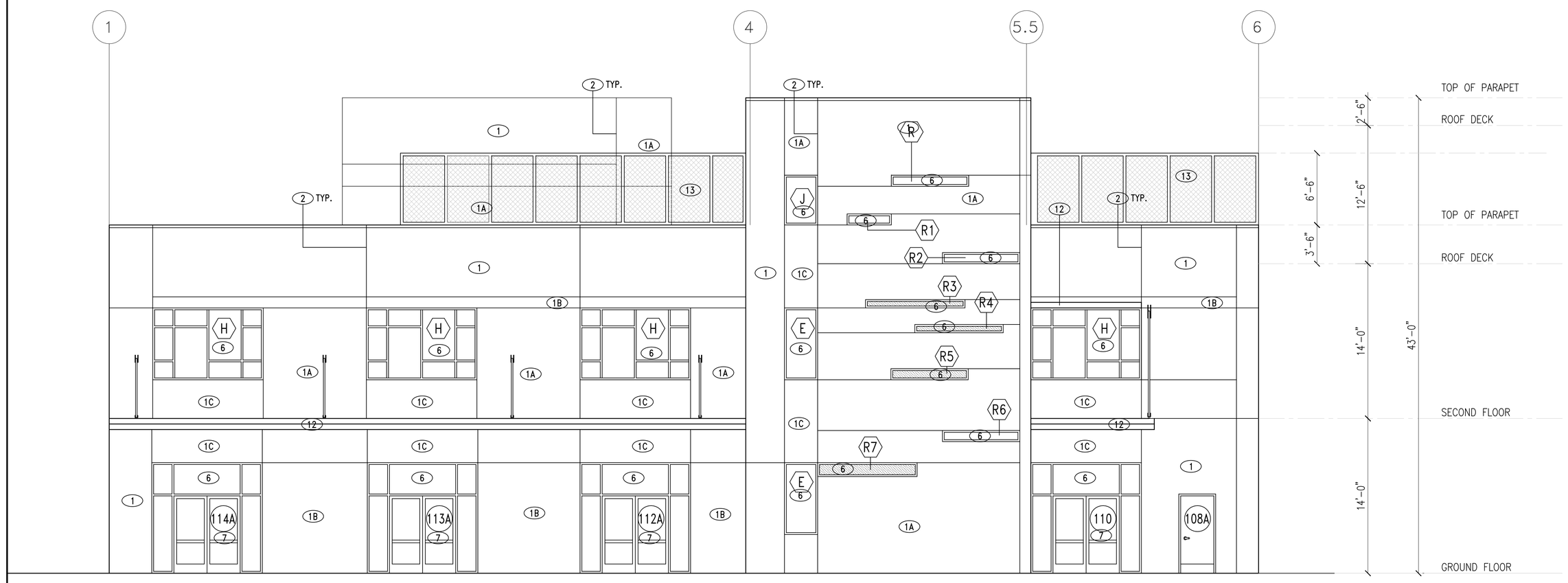

SOUTH ELEVATION

TOTAL SURFACE = 3,286 SF

SOLID SURFACE = 2,530.75 SF (77%)

GLAZED SURFACE = 755.25 SF (23%)

FIRST FLOOR SURFACE = 1,456 SF

SOLID SURFACE = 1,025.25 SF (70%)

GLAZED SURFACE = 430.75 SF (30%)

SECOND FLOOR SURFACE = 1,456 SF

SOLID SURFACE = 1,156 SF (79.4%)

GLAZED SURFACE = 300 SF (20.6%)

THIRD FLOOR SURFACE = 374 SF

SOLID SURFACE = 349.5 SF (93%)

GLAZED SURFACE = 24.5 SF (7%)

1 SOUTH ELEVATION
SCALE: 3/16" = 1'-0"

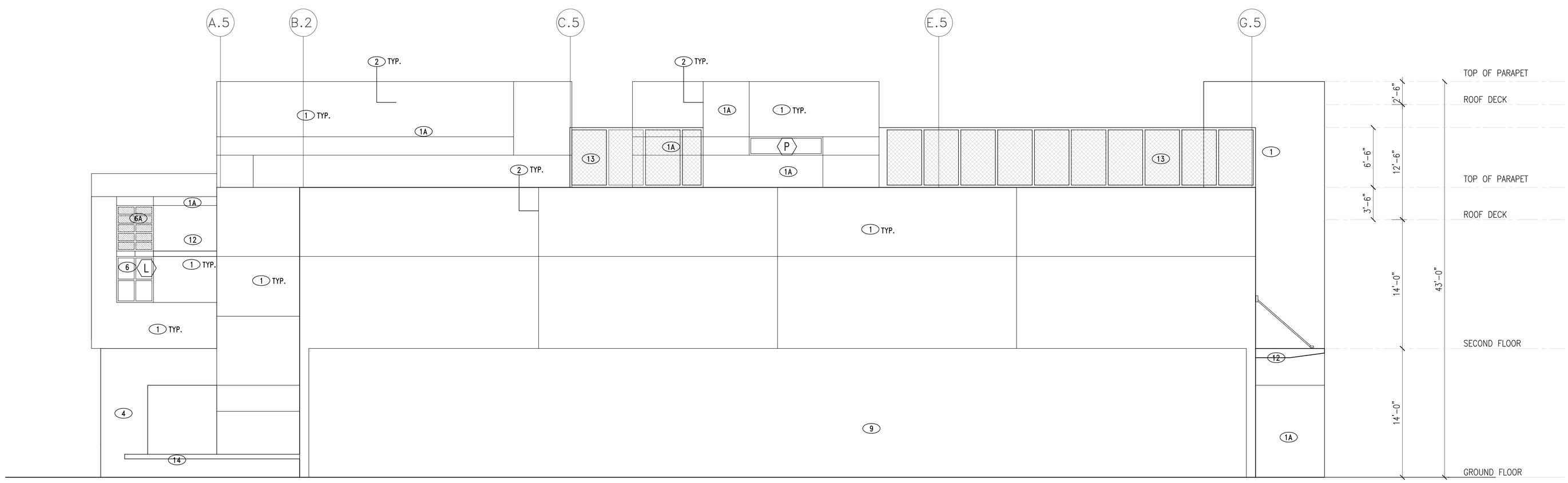

WEST ELEVATION

TOTAL SURFACE = 2,912 SF

SOLID SURFACE = 2,912 SF (100%)

GLAZED SURFACE = 0 SF (5%)

FIRST FLOOR SURFACE = 1,456 SF

SOLID SURFACE = 1,456 SF (100%)

GLAZED SURFACE = 0 SF (0%)

SECOND FLOOR SURFACE = 1,456 SF

SOLID SURFACE = 1,456 SF (100%)

GLAZED SURFACE = 0 SF (0%)

2 WEST ELEVATION
SCALE: 3/16" = 1'-0"

LEGEND:

1. PTD. STUCCO O/LATH, O/WRB, O/5/8" GYP BD, O/EXT. PLYWOOD, O/ WOOD FRAMING
   STUCCO WALL – LA HABRA STUCCO
   FINISH – SMOOTH
   COLOR SPECS. TO FOLLOW
   CONTRACTOR SHALL SUBMIT 8"X11" FINISH SAMPLE FOR APPROVAL
   EXTERIOR STUCCO TO BE PAINTED WITH
   VISTA WEATHER MASTER ELASTOMERIC FINISH
   PRIOR TO APPLYING FINAL ACRIBOND FLAT PAINT COLOR.

1A STUCCO: ACCENT COLOR–LIGHT GRAY, TBD

1B STUCCO: ACCENT COLOR–DARK GRAY, TBD

1C STUCCO: ACCENT COLOR–BLUE, TBD

2 3/4" CLEAR ALUM. REVEAL/CONTROL JOINT, TYP. SEE 18/D1.0

3 6" X6" STEEL COLUMN: CLEAR FINISH

4 METAL WALL PANEL, WEATHERED STEEL (COR–TEN FINISH)

5 PROVIDE ANTI–GRAFFITI FINISH AT THE FIRST 9 FEET, MEASURED FROM GRADE, AT EXTERIOR WALLS AND DOORS. (6306)
(PAINTED SURFACE – LARR #25601T, UNFINISHED SURFACE – LARR #25286T)

6 STOREFRONT GLASS WINDOW:
1" LOW–E INSULATED TEMPERED DUAL GLAZED GLASS,
2" X 4 1/2" CLEAR ALUMINUM STOREFRONT FRAME
GLASS SPEC. – PPG VISTA COOL(2) AZURIA SOLORBAN 60

6A STOREFRONT SPANDREL GLASS WINDOW:
1" LOW–E INSULATED TEMPERED DUAL GLAZED GLASS,
2" x 4 1/2" CLEAR ANODIZED ALUMINUM FRAME
GLASS SPEC. – PPG VISTA COOL(2) AZURIA SOLORBAN 60

7 6'–0" W X 7'–0" HT. PAIR OF STOREFRONT TEMPERED GLASS DOORS CLEAR ANODIZED ALUMINUM FRAME.

8 BUILDING ADDRESS

9 REINFORCED CMU WALL

10 SCHOOL SIGN – STAINLESS STEEL LETTERS

11 TRAPEZOIDAL CORRUGATED STEEL PANEL,
METALTECH–USA TRAPEZOIDAL CORRUGATE OR EQUAL, FINISH–TBD

12 CANOPY OVERHEAD SUPPORTED

13 W.I.FENCE W/PERFORATED PANELS, SEE STRUCTURAL

14 CONCRETE BENCH

FRANCO ARCHITECTS INC.
12345 Ventura Blvd. H
Studio City, CA 91604
Tel 818 754-2030
Fax 818 754-2032
Architecture and Planning

MAGNOLIA SCIENCE ACADEMY
18220 SHERMAN WAY, RESEDA, CA91335

REV	DESCRIPTION	DATE
	PLAN CHECK #1	6/14/2017

LICENSED ARCHITECT
JOHANN D. WANG
C27010
4/30/2019
RENEWAL DATE
STATE OF CALIFORNIA

PROJECT
MAGNOLIA SCIENCE ACADEMY

PROJECT ADDRESS
18220 SHERMAN WAY,
RESEDA, CA91335

DRAWING TITLE
ELEVATIONS

DRAWN BY
ISSUE DATE 6/14/2017
JOB NUMBER
DRAWING SCALE AS NOTED
APPROVED BY:
DRAWING NUMBER
A4.0

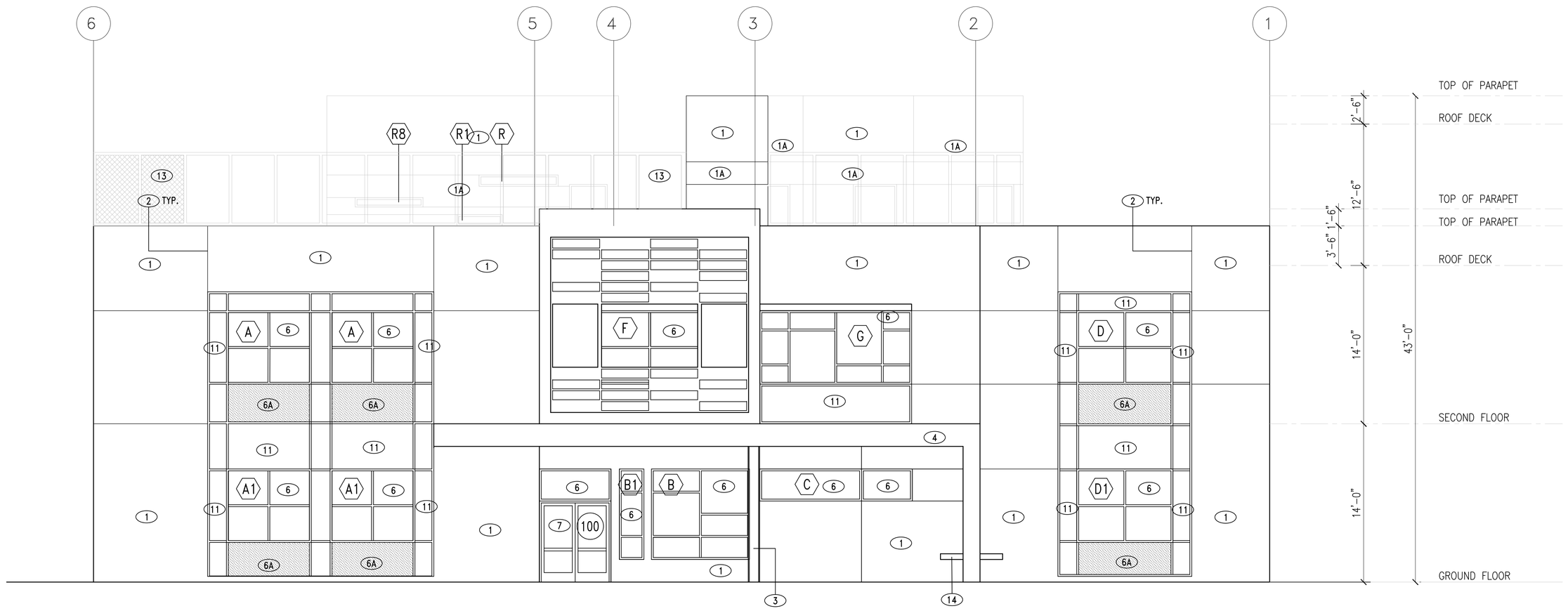

NORTH ELEVATION

TOTAL SURFACE = 2,912 SF

SOLID SURFACE = 2,263.5 SF (78%)

GLAZED SURFACE = 648.5 SF (22%)

FIRST FLOOR SURFACE = 1,456 SF

SOLID SURFACE = 1,127.5 SF (77.4%)

GLAZED SURFACE = 328.5 SF (22.6%)

SECOND FLOOR SURFACE = 1,456 SF

SOLID SURFACE = 1,136 SF (78%)

GLAZED SURFACE = 320 SF (22%)

1 NORTH ELEVATION
SCALE: 3/16" = 1'-0"

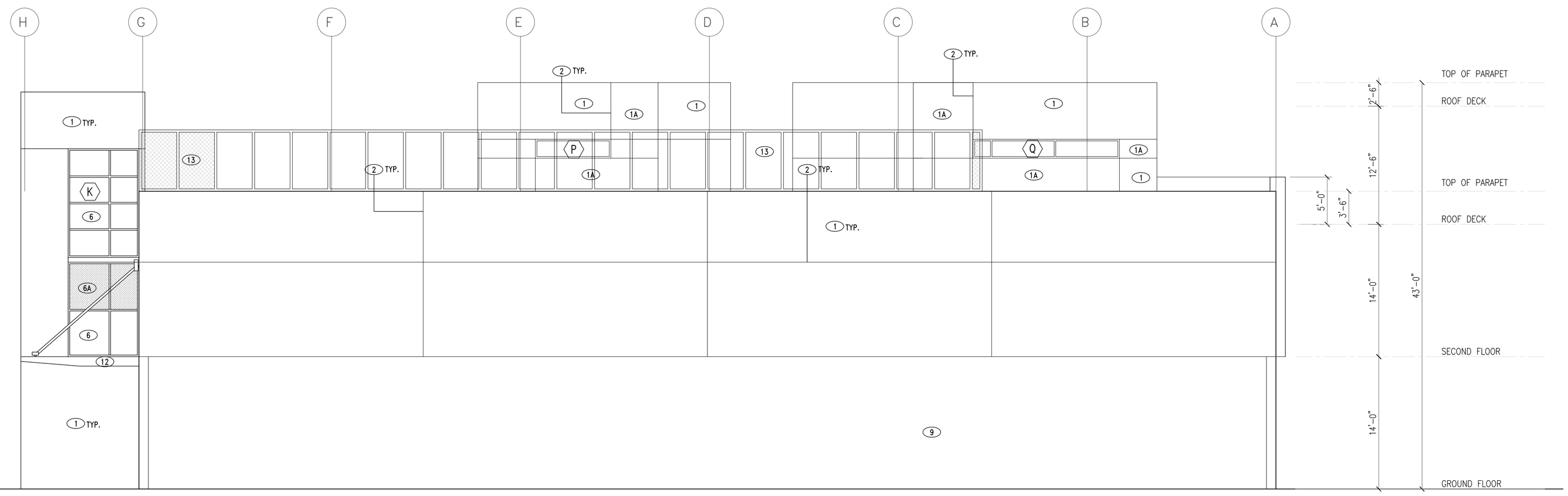

EAST ELEVATION

TOTAL SURFACE = 2,912 SF

SOLID SURFACE = 2,912 SF (100%)

GLAZED SURFACE = 0 SF (5%)

FIRST FLOOR SURFACE = 1,456 SF

SOLID SURFACE = 1,456 SF (100%)

GLAZED SURFACE = 0 SF (0%)

SECOND FLOOR SURFACE = 1,456 SF

SOLID SURFACE = 1,456 SF (100%)

GLAZED SURFACE = 0 SF (0%)

2 EAST ELEVATION
SCALE: 3/16" = 1'-0"

LEGEND:

1. PTD. STUCCO O/LATH, O/WRB, O/5/8" GYP BD, O/EXT. PLYWOOD, O/ WOOD FRAMING
   STUCCO WALL – LA HABRA STUCCO
   FINISH – SMOOTH
   COLOR SPECS. TO FOLLOW
   CONTRACTOR SHALL SUBMIT 8"X11" FINISH SAMPLE FOR APPROVAL
   EXTERIOR STUCCO TO BE PAINTED WITH
   VISTA WEATHER MASTER ELASTOMERIC FINISH
   PRIOR TO APPLYING FINAL ACRIBOND FLAT PAINT COLOR.

1A. STUCCO: ACCENT COLOR–LIGHT GRAY, TBD

1B. STUCCO: ACCENT COLOR–DARK GRAY, TBD

1C. STUCCO: ACCENT COLOR–BLUE, TBD

2. 3/4" CLEAR ALUM. REVEAL/CONTROL JOINT, TYP. SEE 18/D1.0

3. 6" X 6" STEEL COLUMN: CLEAR FINISH

4. METAL WALL PANEL, WEATHERED STEEL (COR–TEN FINISH)
   METAL WALL PANEL, WEATHERED STEEL (COR–TEN FINISH)

5. PROVIDE ANTI–GRAFFITI FINISH AT THE FIRST 9 FEET, MEASURED FROM GRADE, AT EXTERIOR WALLS AND DOORS. (6306)
   (PAINTED SURFACE – LARR #25601T, UNFINISHED SURFACE – LARR #25286T)

6. STOREFRONT GLASS WINDOW:
   1" LOW–E INSULATED TEMPERED DUAL GLAZED GLASS,
   2" X 4 1/2" CLEAR ALUMINUM STOREFRONT FRAME
   GLASS SPEC. – PPG VISTA COOL(2) AZURIA SOLORBAN 60

6A. STOREFRONT SPANDREL GLASS WINDOW:
   1" LOW–E INSULATED TEMPERED DUAL GLAZED GLASS,
   2" x 4 1/2" CLEAR ANODIZED ALUMINUM FRAME
   GLASS SPEC. – PPG VISTA COOL(2) AZURIA SOLORBAN 60

7. 6'–0" W X 7'–0" HT. PAIR OF STOREFRONT TEMPERED GLASS DOORS CLEAR ANODIZED ALUMINUM FRAME.

8. BUILDING ADDRESS

9. REINFORCED CMU WALL

10. SCHOOL SIGN – STAINLESS STEEL LETTERS

11. TRAPEZOIDAL CORRUGATED STEEL PANEL,
    METALTECH–USA TRAPEZOIDAL CORRUGATE OR EQUAL, FINISH–TBD

12. CANOPY OVERHEAD SUPPORTED

13. W.I. FENCE W/ PERFORATED PANELS, SEE STRUCTURAL

14. CONCRETE BENCH

FRANCO ARCHITECTS INC.
12345 Ventura Blvd. H
Studio City, CA 91604
Tel 818 754-2030
Fax 818 754-2032
Architecture and Planning

MAGNOLIA SCIENCE ACADEMY
18220 SHERMAN WAY, RESEDA, CA91335

REV	DESCRIPTION	DATE
	PLAN CHECK #1	6/14/2017

LICENSED ARCHITECT
JOHANN D. WANG
C27010
4/30/2019
RENEWAL DATE
STATE OF CALIFORNIA

PROJECT
MAGNOLIA SCIENCE ACADEMY

PROJECT ADDRESS
18220 SHERMAN WAY,
RESEDA, CA91335

DRAWING TITLE
ELEVATIONS

DRAWN BY
ISSUE DATE 6/14/2017
JOB NUMBER
DRAWING SCALE AS NOTED
APPROVED BY:

DRAWING NUMBER
A4.1

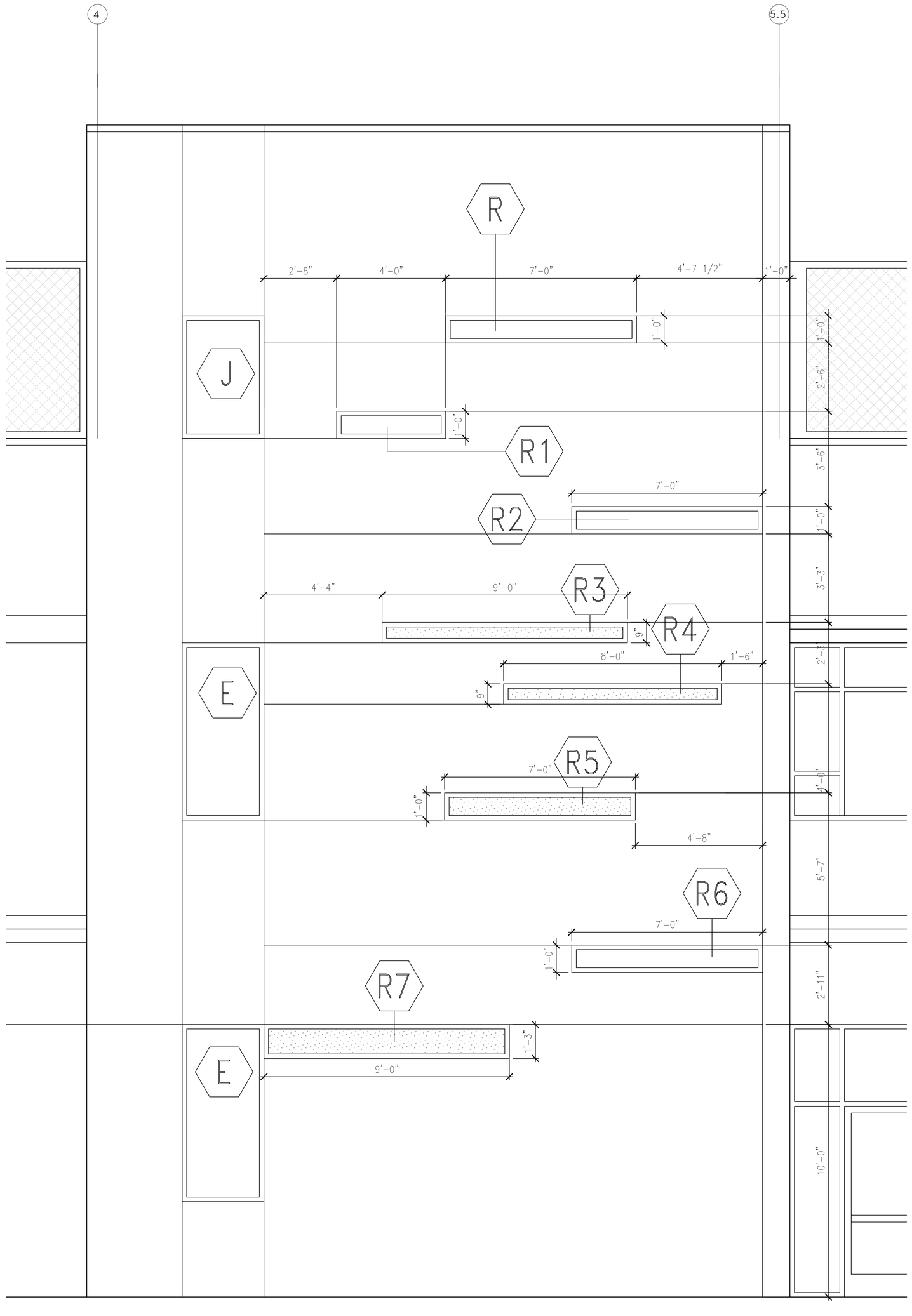

1 SOUTH STAIRS ELEVATION DETAIL
SCALE: 1/2" = 1'-0"

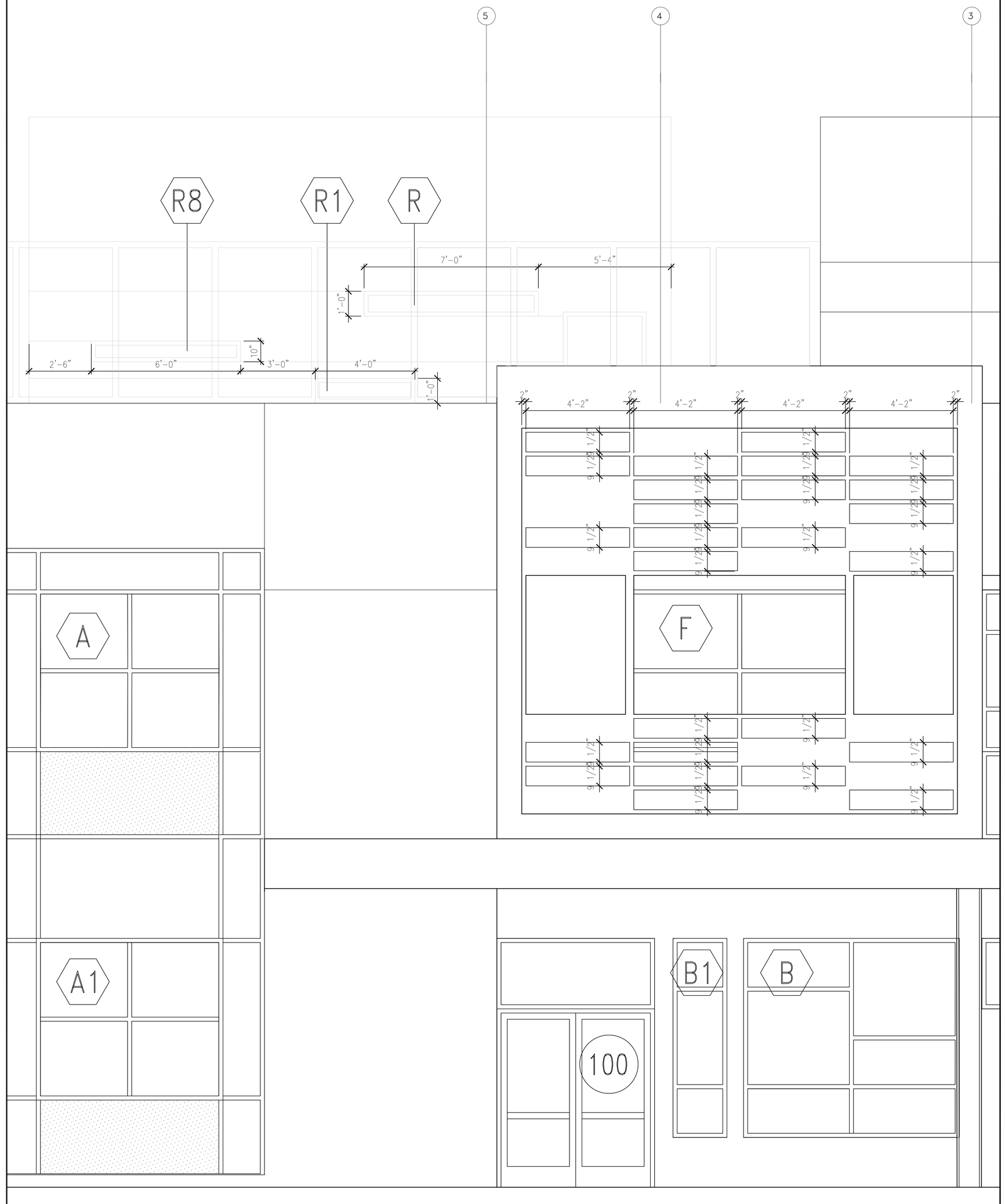

2 NORTH ELEVATION DETAIL
SCALE: 1/2" = 1'-0"

FRANCO ARCHITECTS INC.
12345 Ventura Blvd. H
Studio City, CA 91604
Tel 818 754-2030
Fax 818 754-2032
Architecture and Planning

MAGNOLIA SCIENCE ACADEMY
18220 SHERMAN WAY, RESEDA, CA91335

REV	DESCRIPTION	DATE
	PLAN CHECK #1	6/14/2017

LICENSED ARCHITECT
JOHANN D. WANG
C27010
4/30/2019
RENEWAL DATE
STATE OF CALIFORNIA

PROJECT
MAGNOLIA SCIENCE ACADEMY

PROJECT ADDRESS
18220 SHERMAN WAY, RESEDA, CA91335

DRAWING TITLE
ELEVATIONS-DETAIL

DRAWN BY:
ISSUE DATE: 6/14/2017
JOB NUMBER:
DRAWING SCALE: AS NOTED
APPROVED BY:
DRAWING NUMBER
A4.2

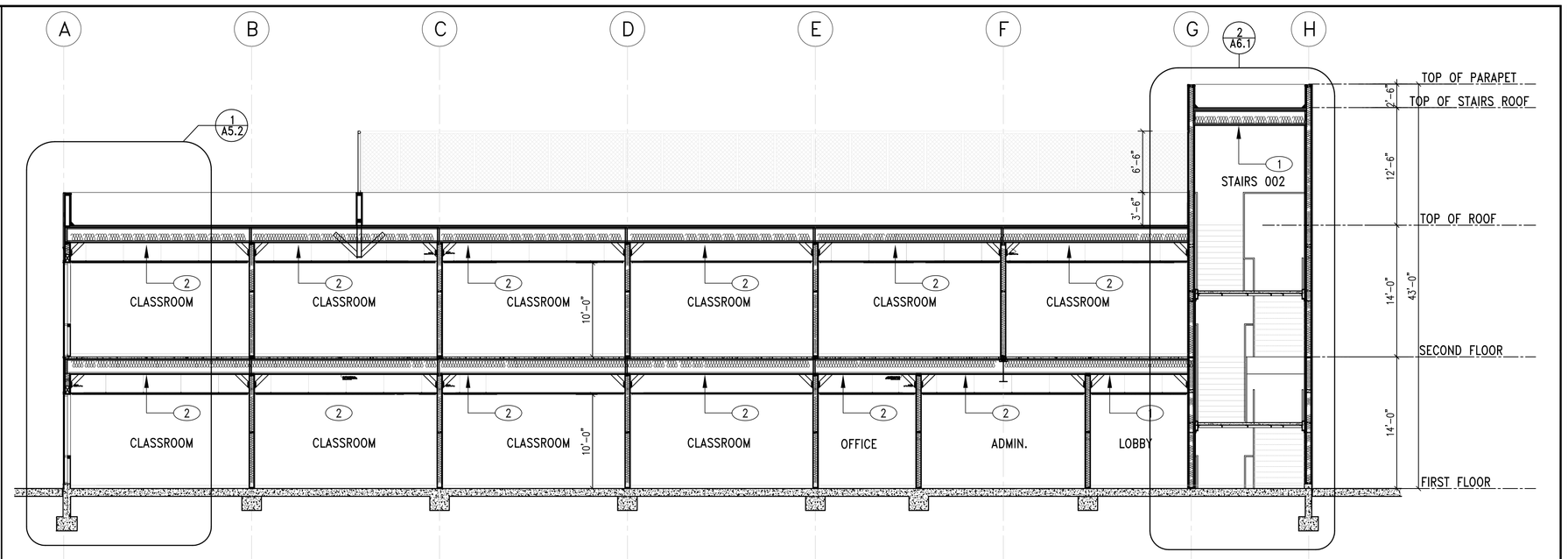

1 (2) LAYERS OF 5/8" GYP. BD. PTD. APPLIED TO UNDERSIDED OF JOISTS. 1 HOUR FIRE RATING REF. GA FILE NO. FC 5513

2 (1) LAYER OF 5/8" GYP. BD. AND RESILIENT CHANNEL PTD. APPLIED TO UNDERSIDED OF JOISTS. NON-RATED SPACE

1 WALL SECTION

SCALE: 1/8"=1'-0"

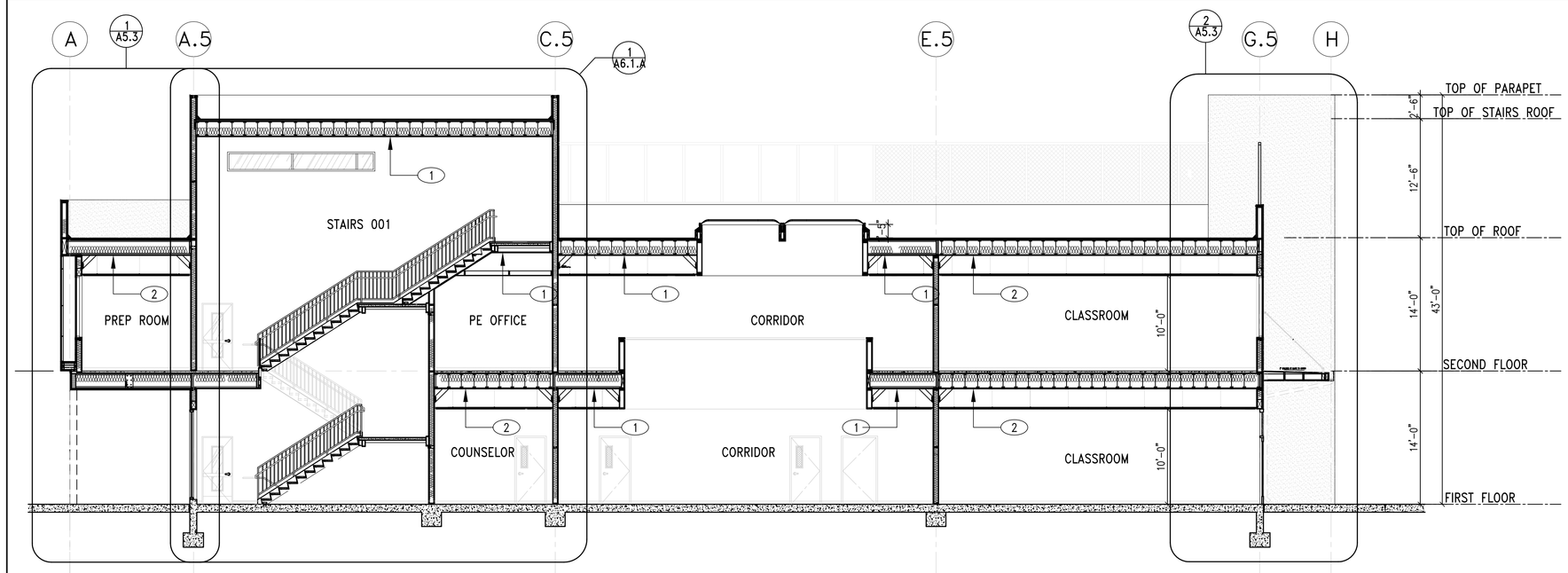

1 (2) LAYERS OF 5/8" GYP. BD. PTD. APPLIED TO UNDERSIDED OF JOISTS. 1 HOUR FIRE RATING REF. GA FILE NO. FC 5513

2 (1) LAYER OF 5/8" GYP. BD. AND RESILIENT CHANNEL PTD. APPLIED TO UNDERSIDED OF JOISTS. NON-RATED SPACE

2 WALL SECTION

SCALE: 1/8"=1'-0"

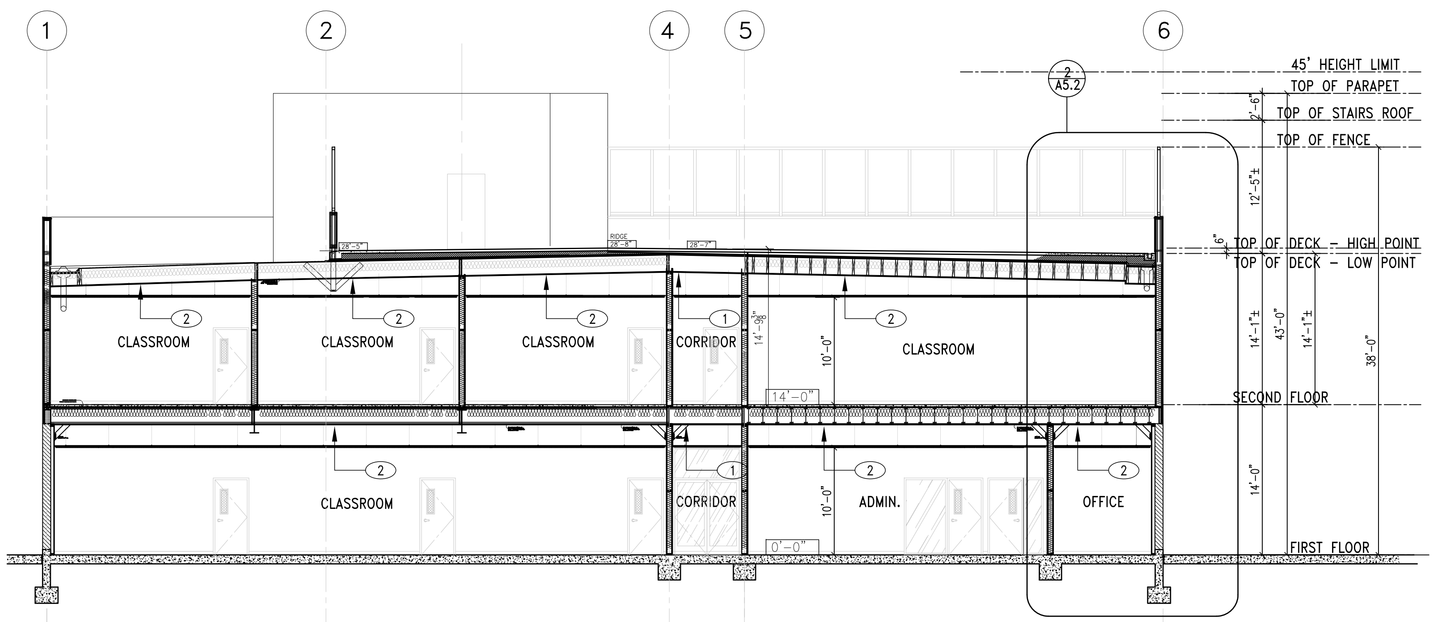

1 (2) LAYERS OF 5/8" GYP. BD. PTD. APPLIED TO UNDERSIDED OF JOISTS. 1 HOUR FIRE RATING REF. GA FILE NO. FC 5513

2 (1) LAYER OF 5/8" GYP. BD. AND RESILIENT CHANNEL PTD. APPLIED TO UNDERSIDED OF JOISTS. NON-RATED SPACE

4 WALL SECTION

SCALE: 1/8"=1'-0"

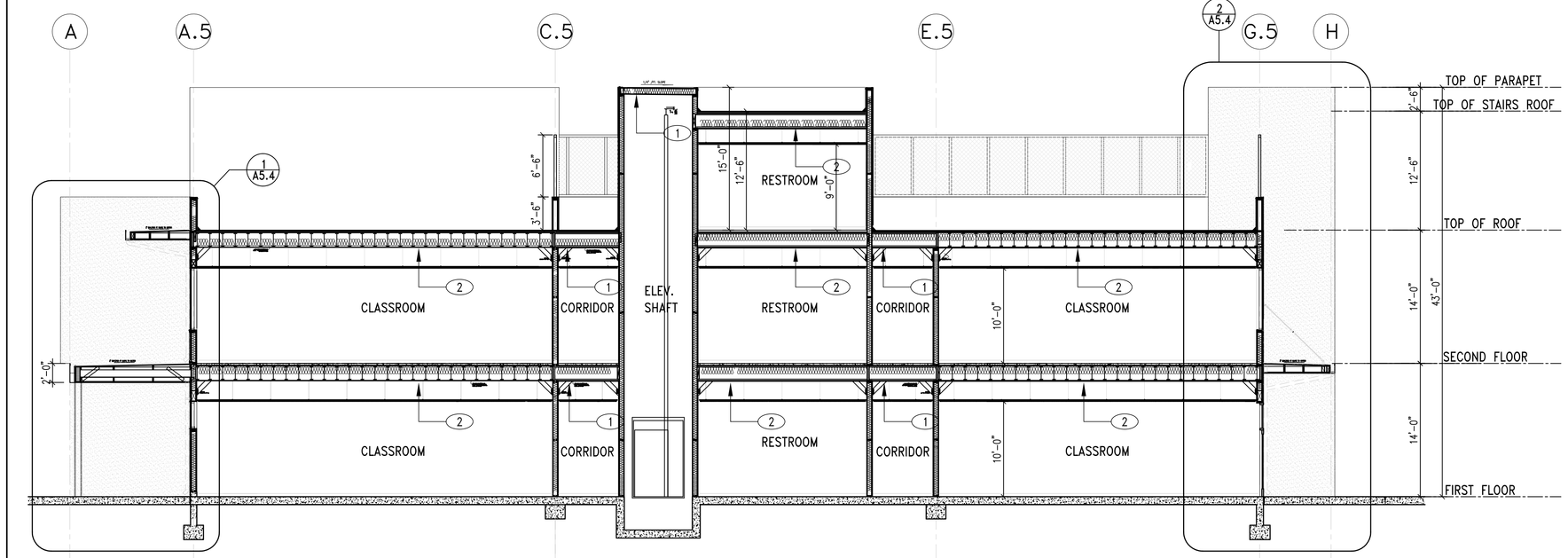

1 (2) LAYERS OF 5/8" GYP. BD. PTD. APPLIED TO UNDERSIDED OF JOISTS. 1 HOUR FIRE RATING REF. GA FILE NO. FC 5513

2 (1) LAYER OF 5/8" GYP. BD. AND RESILIENT CHANNEL PTD. APPLIED TO UNDERSIDED OF JOISTS. NON-RATED SPACE

3 WALL SECTION

SCALE: 1/8"=1'-0"

FRANCO ARCHITECTS INC.
12345 Ventura Blvd. H
Studio City, CA 91604
Tel 818 754-2030
Fax 818 754-2032
Architecture and Planning

MAGNOLIA SCIENCE ACADEMY

18220 SHERMAN WAY, RESEDA, CA91335

REV	DESCRIPTION	DATE
	PLAN CHECK #1	6/14/2017

LICENSED ARCHITECT
JOHANN D. WAND
C27010
4/30/2019
RENEWAL DATE
STATE OF CALIFORNIA

PROJECT
MAGNOLIA SCIENCE ACADEMY

PROJECT ADDRESS
18220 SHERMAN WAY, RESEDA, CA91335

DRAWING TITLE
SECTIONS AND DETAILS

DRAWN BY

ISSUE DATE
6/14/2017

JOB NUMBER

DRAWING SCALE
AS NOTED

APPROVED BY:

DRAWING NUMBER
A5.1

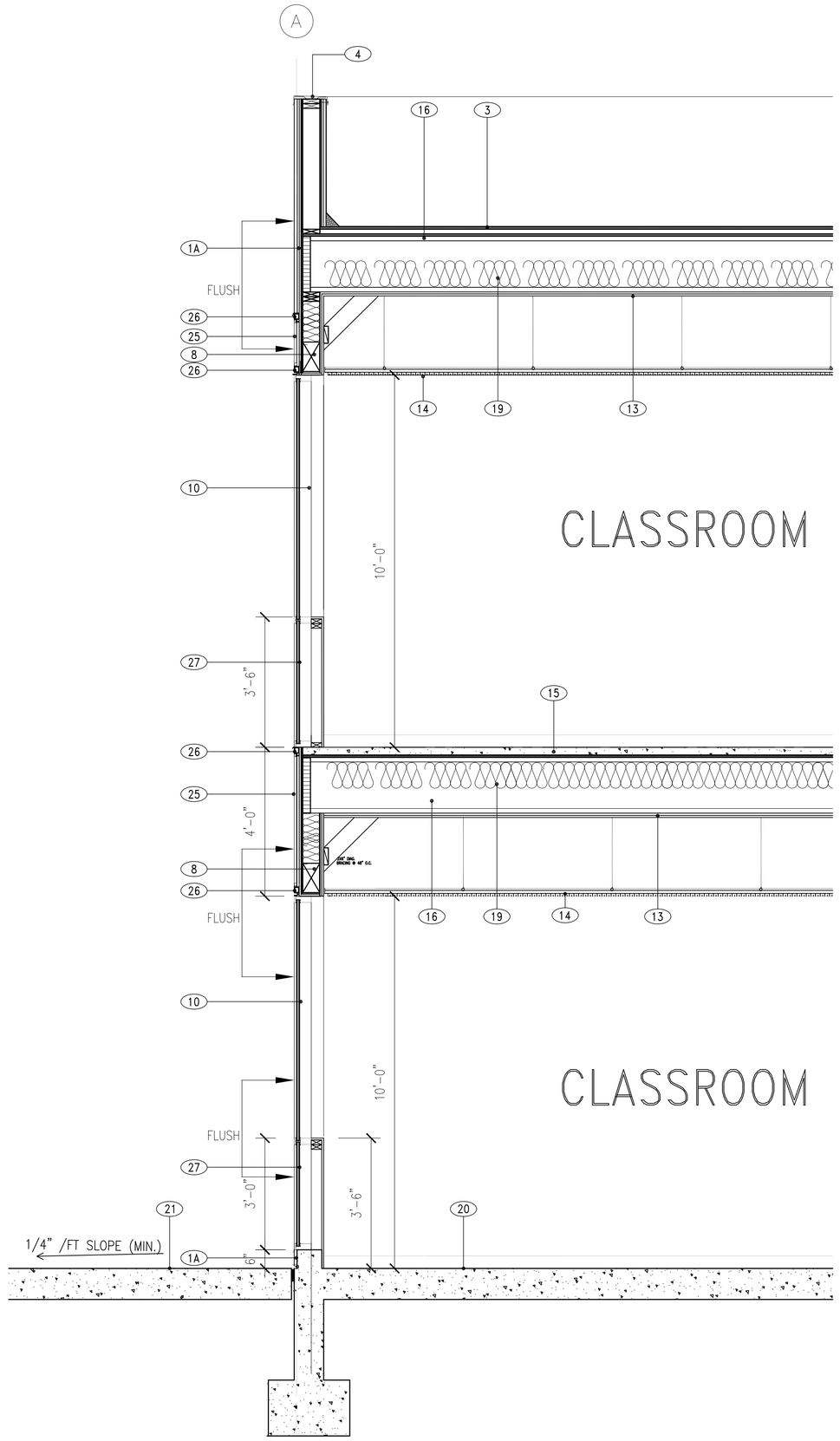

1 WALL SECTION
SCALE: 1/2" = 1'-0"

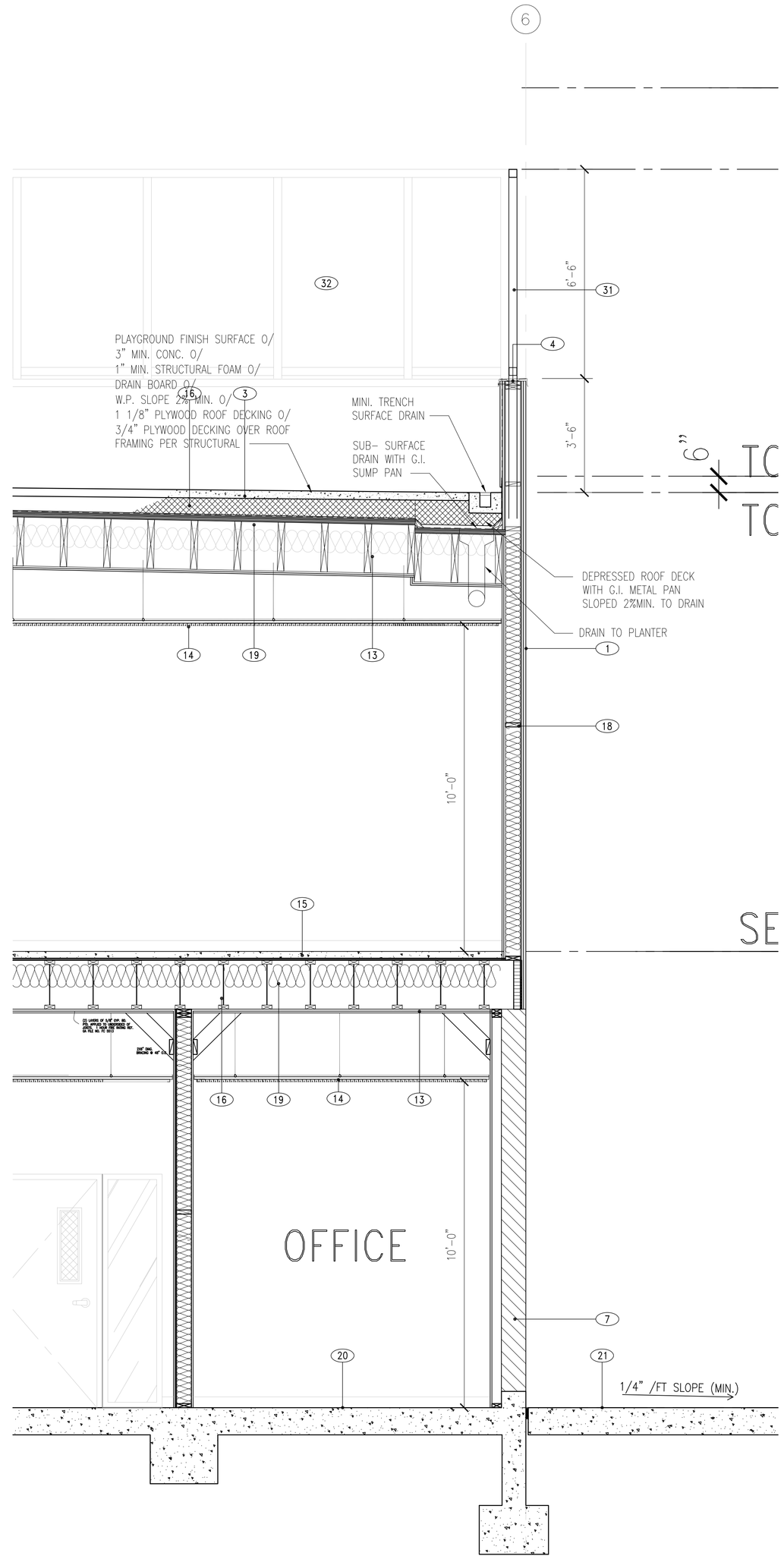

SPRINKLER SYSTEM SHALL BE INSTALLED AT UNDERSIDE OF CANOPY THROUGHOUT
IN NON-RATED SPACE, 1 LAYER OF GYP BD AND RESILIENT CHANNEL UNDER STRUCTURE
IN RATED SPACE, 2 LAYERS OF GYP BD UNDER STRUCTURE

2 WALL SECTION
SCALE: 1/2" = 1'-0"

LEGEND

1. PTD. STUCCO O/LATH O/WRB O/5/8" GYP BD O/EXT. PLYWOOD O/ WOOD FRAMING W/R19 INSULATION WHERE OCCURS
1A. PTD. STUCCO O/LATH O/WRB O/ 2 LAYERS OF 5/8" GYP BD O/EXT. PLYWOOD O/ WOOD FRAMING W/R19 INSULATION WHERE OCCURS, FLUSH W/CORRUGATED STEEL
2. STUCCO SOFFIT : PTD. STUCCO O/LATH O/ EXT. PLYWOOD O/WOOD FRAMING
3. DARK GRAY CLASS A FIRE-RATED BUILT-UP ROOF ASSEMBLY O/PLYWOOD O/ROOF JOIST O/ R-30 INSULATION SEE STRUCT'L FOR PLYWOOD AND ROOF JOISTS
4. MTL. CAP FLASHING W/ CONTINUOUS CLEAT, PTD. TO MATCH WALL COLOR
5. BEAM (HSS OR GLB), SEE STRUCTURAL
6. STL. COLUMN, SEE STRUCT'L PLAN CLEAR COATED
7. CMU WALL
8. HEADER, SEE STRUCT'L
9. LINEAR VENT AT STUCCO SOFFIT
10. STOREFRONT GLASS WINDOW: 1" LOW-E INSULATED TEMPERED DUAL GLAZED GLASS, 2" x 4 1/2" CLEAR ANODIZED ALUMINUM FRAME
11. 6'-0" W X 7'-0" H. PAIR OF STOREFRONT GLASS DOORS CLEAR ANODIZED ALUMINUM FRAME. SEE DOOR SCHEDULE ON A10.1
12. BUILDING/COLUMN BEYOND
13. 2-LAYERS 5/8" TYPE X GYP. BD. APPLIED TO UNDERSIDE OF ROOF JOIST 1-HR. FIRE RATING REF.- GA FILE NO. 5407 TYP. ALL CEILINGS
14. SUSPENDED ACOUSTICAL T-BAR CLG. TILE SYSTEM SEE REFLECTED CEILING PLAN FOR HT. AND D3.0 FOR DETAILS
15. LIGHTWEIGHT CONCRETE OVER PLYWOOD OVER FLOOR JOISTS, SEE STRUCT'L
16. ROOF/FLOOR JOISTS, SEE STRUCT.
17. 1 LAYER 5/8" TYPE X GYP. BD. APPLIED TO UNDERSIDE OF STRUCT.
18. INSTALL FIRE BLOCKING AT MID HEIGHT OF ALL FULL HT. WALLS. TYP
19. SOUND INSULATION
20. CONCRETE SLAB AND FOOTING, SEE STRUCT'L
21. CONCRETE SLAB ON GRADE, 1/4"/FT. SLOPE AWAY FROM BUILDING
22. PAINTED G.I. GUTTER WITH G.I. LINER SLOPED 1% TO SCUPPER
23. GALV. DOWNSPOUT, PAINTED
24. G.I. METAL ROOF O/ ROOFING FELT O/ 1/4" CEMENT BOARD O/ 3/4" PLYWOOD O/ WOOD FRAMING - SEE STRUCTURAL DESIGN
25. TRAPEZOIDAL CORRUGATED STEEL PANEL, O/METAL CHANNEL, O/WRB METALTECH-USA TRAPEZOIDAL CORRUGATE OR EQUAL
26. 2" X ALUMINUM TUBE
27. STOREFRONT SPANDREL GLASS WINDOW: 1" LOW-E INSULATED TEMPERED DUAL GLAZED GLASS, 2" x 4 1/2" CLEAR ANODIZED ALUMINUM FRAME GLASS SPEC. - PPG VISTA COOL(2) AZURIA SOLORBAN 60
28. 1/4" STEEL PLATE WITH CUT OUT, SEE ELEVATION. PAINTED, COLOR TO MATCH STUCCO COLOR
29. METAL WALL PANEL, WEATHER STEEL (COR-TEN FINISH) MEATLTECH-USA OR EQUAL
30. STEEL BRACING
31. HSS POST AT 48" O.C. EMBEDDED IN FULL HEIGHT OF HSS BELOW, SEE STRUCTURAL
32. WIRE MESH FENCE

FRANCO ARCHITECTS INC.
12345 Ventura Blvd. H
Studio City, CA 91604
Tel 818 754-2030
Fax 818 754-2032
Architecture and Planning

MAGNOLIA SCIENCE ACADEMY
18220 SHERMAN WAY, RESEDA, CA91335

REV	DESCRIPTION	DATE
	PLAN CHECK #1	6/14/2017

LICENSED ARCHITECT
JOHANN D. WANG
C27010
4/30/2019
RENEWAL DATE
STATE OF CALIFORNIA

PROJECT
MAGNOLIA SCIENCE ACADEMY

PROJECT ADDRESS
18220 SHERMAN WAY, RESEDA, CA91335

DRAWING TITLE
WALL DETAILS

DRAWN BY:
ISSUE DATE: 6/14/2017
JOB NUMBER:
DRAWING SCALE: AS NOTED
APPROVED BY:

DRAWING NUMBER
A5.2

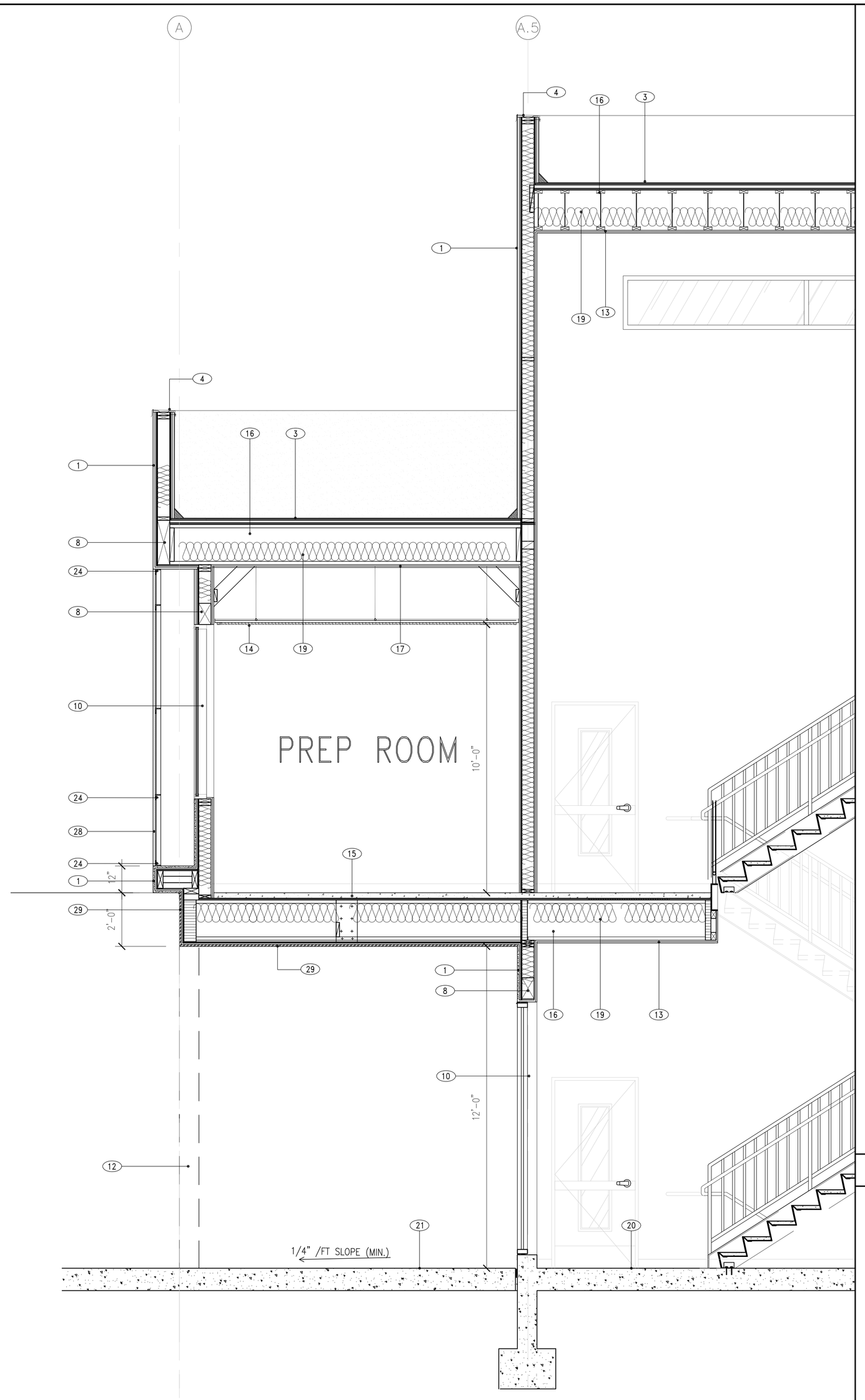

SPRINKLER SYSTEM SHALL BE INSTALLED AT UNDERSIDE OF CANOPY THROUGHOUT IN NON-RATED SPACE, 1 LAYER OF GYP BD AND RESILIENT CHANNEL UNDER STRUCTURE IN RATED SPACE, 2 LAYERS OF GYP BD UNDER STRUCTURE

1 WALL SECTION
SCALE: 1/2" = 1'-0"

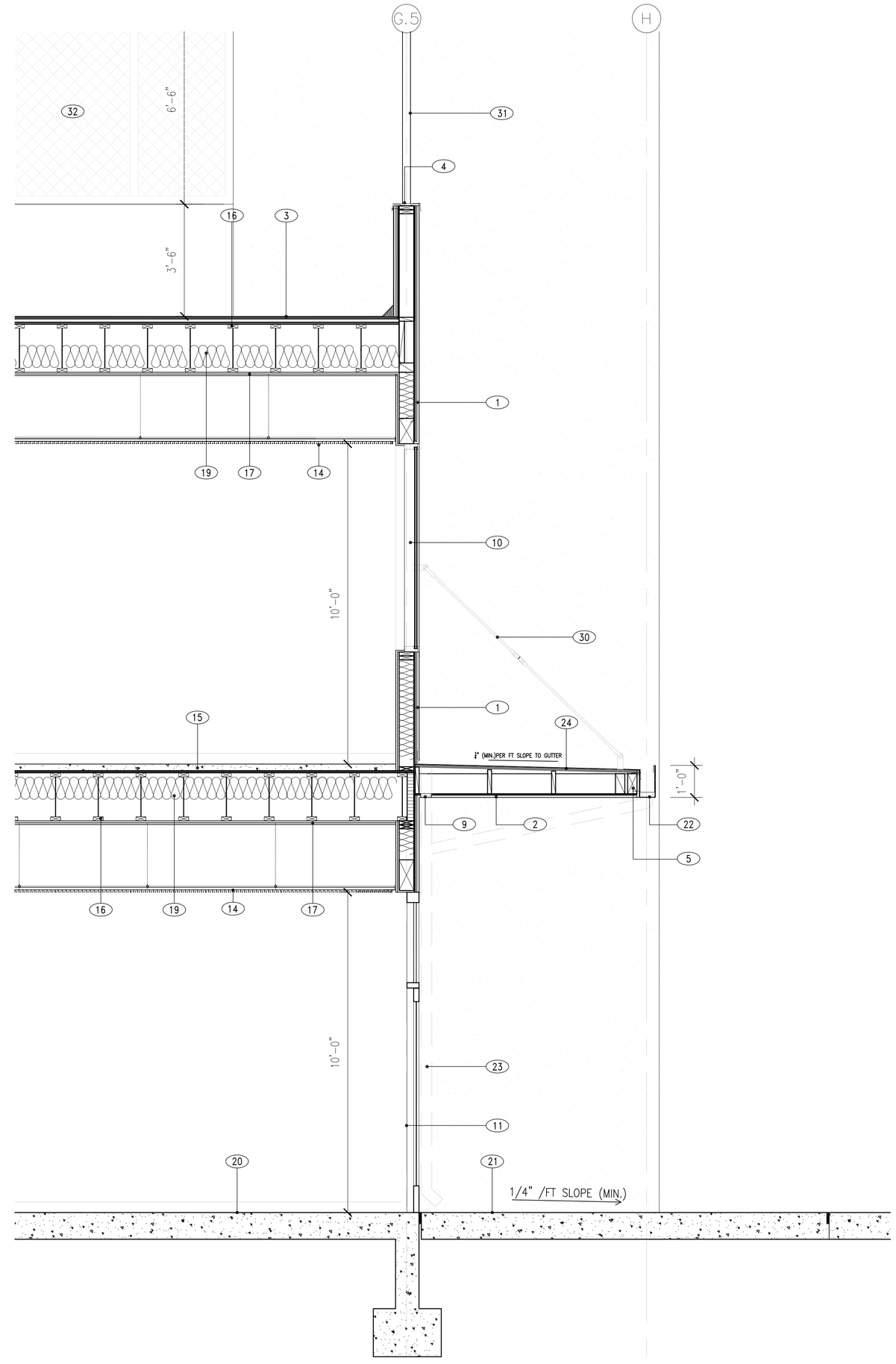

2 WALL SECTION
SCALE: 1/2" = 1'-0"

LEGEND

1. PTD. STUCCO O/LATH O/WRB O/5/8" GYP BD O/EXT. PLYWOOD O/ WOOD FRAMING W/R19 INSULATION WHERE OCCURS
1A. PTD. STUCCO O/LATH O/WRB O/ 2 LAYERS OF 5/8" GYP BD O/EXT. PLYWOOD O/ WOOD FRAMING W/R19 INSULATION WHERE OCCURS, FLUSH W/CORRUGATED STEEL
2. STUCCO SOFFIT : PTD. STUCCO O/LATH O/ EXT. PLYWOOD O/WOOD FRAMING
3. DARK GRAY CLASS A FIRE-RATED BUILT-UP ROOF ASSEMBLY O/PLYWOOD O/ROOF JOIST O/ R-30 INSULATION SEE STRUCT'L FOR PLYWOOD AND ROOF JOISTS
4. MTL. CAP FLASHING W/ CONTINUOUS CLEAT, PTD. TO MATCH WALL COLOR
5. BEAM (HSS OR GLB), SEE STRUCTURAL
6. STL. COLUMN, SEE STRUCT'L PLAN CLEAR COATED
7. CMU WALL
8. HEADER, SEE STRUCT'L
9. LINEAR VENT AT STUCCO SOFFIT
10. STOREFRONT GLASS WINDOW: 1" LOW-E INSULATED TEMPERED DUAL GLAZED GLASS, 2" x 4 1/2" CLEAR ANODIZED ALUMINUM FRAME
11. 6'-0" W X 7'-0" H. PAIR OF STOREFRONT GLASS DOORS CLEAR ANODIZED ALUMINUM FRAME. SEE DOOR SCHEDULE ON A10.1
12. BUILDING/COLUMN BEYOND
13. 2-LAYERS 5/8" TYPE X GYP. BD. APPLIED TO UNDERSIDE OF ROOF JOIST 1-HR. FIRE RATING REF.- GA FILE NO. 5407 TYP. ALL CEILINGS
14. SUSPENDED ACOUSTICAL T-BAR CLG. TILE SYSTEM SEE REFLECTED CEILING PLAN FOR HT. AND D3.0 FOR DETAILS
15. LIGHTWEIGHT CONCRETE OVER PLYWOOD OVER FLOOR JOISTS, SEE STRUCT'L
16. ROOF/FLOOR JOISTS, SEE STRUCT.
17. 1 LAYER 5/8" TYPE X GYP. BD. APPLIED TO UNDERSIDE OF STRUCT.
18. INSTALL FIRE BLOCKING AT MID HEIGHT OF ALL FULL HT. WALLS. TYP
19. SOUND INSULATION
20. CONCRETE SLAB AND FOOTING, SEE STRUCT'L
21. CONCRETE SLAB ON GRADE, 1/4"/FT. SLOPE AWAY FROM BUILDING
22. PAINTED G.I. GUTTER WITH G.I. LINER SLOPED 1% TO SCUPPER
23. GALV. DOWNSPOUT, PAINTED
24. G.I. METAL ROOF O/ ROOFING FELT O/ 1/4" CEMENT BOARD O/ 3/4" PLYWOOD O/ WOOD FRAMING - SEE STRUCTURAL DESIGN
25. TRAPEZOIDAL CORRUGATED STEEL PANEL, O/METAL CHANNEL, O/WRB METALTECH-USA TRAPEZOIDAL CORRUGATE OR EQUAL
26. 2" X ALUMINUM TUBE
27. STOREFRONT SPANDREL GLASS WINDOW: 1" LOW-E INSULATED TEMPERED DUAL GLAZED GLASS, 2" x 4 1/2" CLEAR ANODIZED ALUMINUM FRAME GLASS SPEC. - PPG VISTA COOL(2) AZURIA SOLORBAN 60
28. 1/4" STEEL PLATE WITH CUT OUT, SEE ELEVATION. PAINTED, COLOR TO MATCH STUCCO COLOR
29. METAL WALL PANEL, WEATHER STEEL (COR-TEN FINISH) MEATLTECH-USA OR EQUAL
30. STEEL BRACING
31. HSS POST AT 48" O.C. EMBEDDED IN FULL HEIGHT OF HSS BELOW, SEE STRUCTURAL
32. WIRE MESH FENCE

FRANCO ARCHITECTS INC.
12345 Ventura Blvd. H
Studio City, CA 91604
Tel 818 754-2030
Fax 818 754-2032
Architecture and Planning

MAGNOLIA SCIENCE ACADEMY
18220 SHERMAN WAY, RESEDA, CA91335

REV	DESCRIPTION	DATE
	PLAN CHECK #1	6/14/2017

LICENSED ARCHITECT
JOHANN D. FRANCO
C27010
4/30/2019
RENEWAL DATE
STATE OF CALIFORNIA

PROJECT
MAGNOLIA SCIENCE ACADEMY

PROJECT ADDRESS
18220 SHERMAN WAY, RESEDA, CA91335

DRAWING TITLE
WALL DETAILS

DRAWN BY:
ISSUE DATE: 6/14/2017
JOB NUMBER:
DRAWING SCALE: AS NOTED
APPROVED BY:

DRAWING NUMBER
A5.3

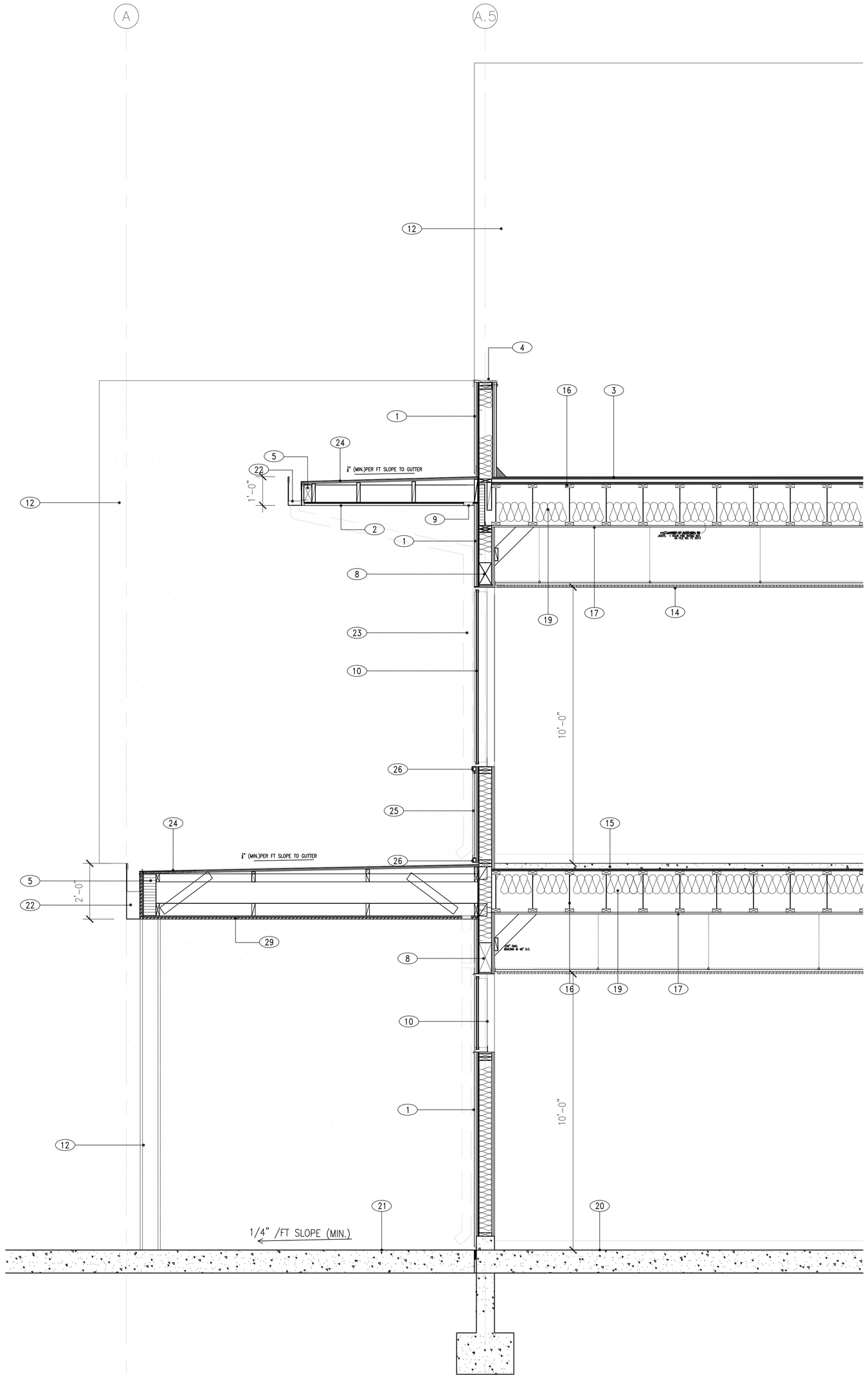

SPRINKLER SYSTEM SHALL BE INSTALLED AT UNDERSIDE OF CANOPY THROUGHOUT
IN NON-RATED SPACE, 1 LAYER OF GYP BD AND RESILIENT CHANNEL UNDER STRUCTURE
IN RATED SPACE, 2 LAYERS OF GYP BD UNDER STRUCTURE

1 WALL SECTION
SCALE: 1/2" = 1'-0"

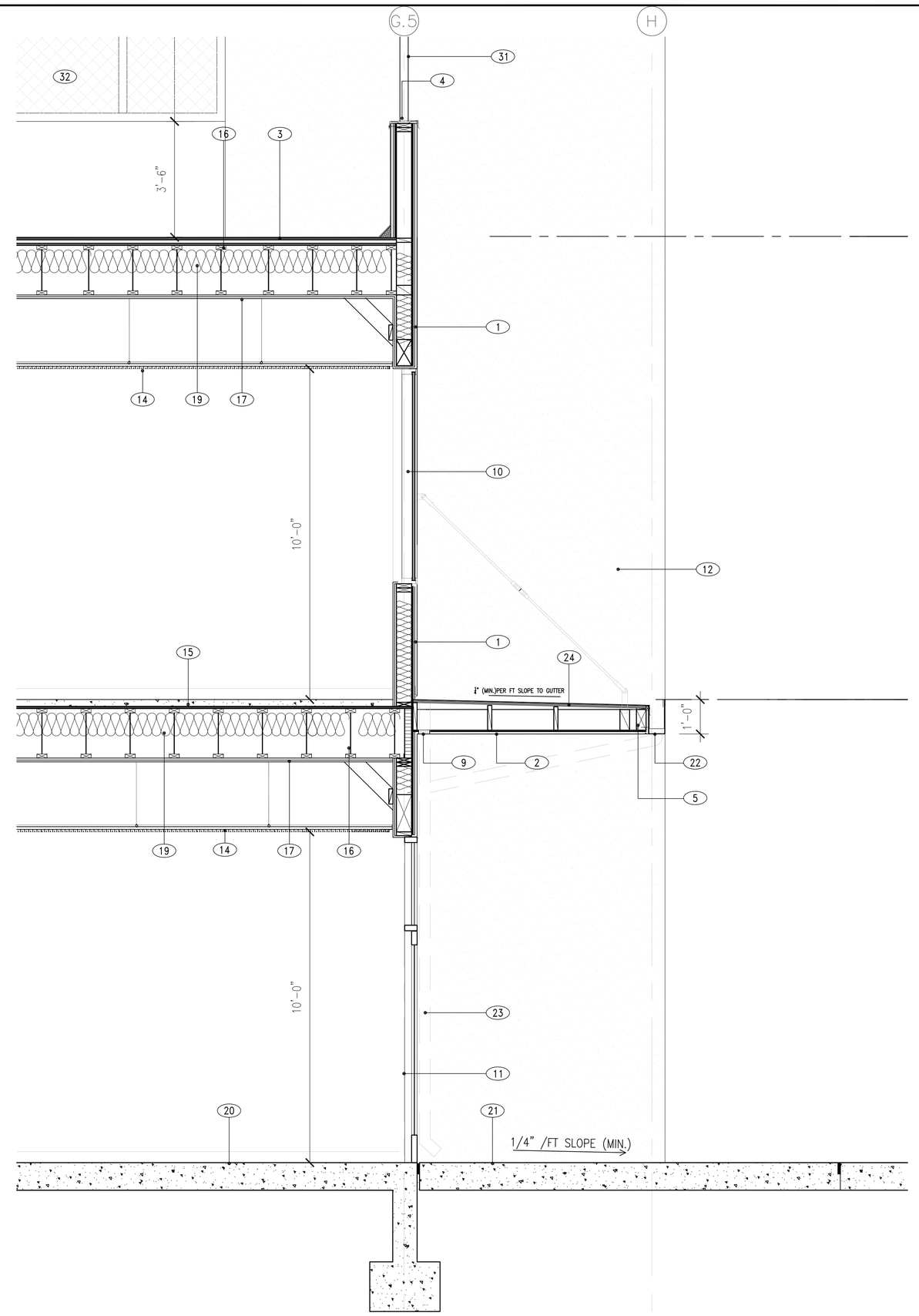

2 WALL SECTION
SCALE: 1/2" = 1'-0"

LEGEND

1. PTD. STUCCO O/LATH O/WRB O/5/8" GYP BD O/EXT. PLYWOOD O/ WOOD FRAMING W/R19 INSULATION WHERE OCCURS, FLUSH W/CORRUGATED STEEL
1A. PTD. STUCCO O/LATH O/WRB O/ 2 LAYERS OF 5/8" GYP BD O/EXT. PLYWOOD O/ WOOD FRAMING W/R19 INSULATION WHERE OCCURS
2. STUCCO SOFFIT : PTD. STUCCO O/LATH O/ EXT. PLYWOOD O/WOOD FRAMING
3. DARK GRAY CLASS A FIRE-RATED BUILT-UP ROOF ASSEMBLY O/PLYWOOD O/ROOF JOIST O/ R-30 INSULATION SEE STRUCT'L FOR PLYWOOD AND ROOF JOISTS
4. MTL. CAP FLASHING W/ CONTINUOUS CLEAT, PTD. TO MATCH WALL COLOR
5. BEAM (HSS OR GLB), SEE STRUCTURAL
6. STL. COLUMN, SEE STRUCT'L PLAN CLEAR COATED
7. CMU WALL
8. HEADER, SEE STRUCT'L
9. LINEAR VENT AT STUCCO SOFFIT
10. STOREFRONT GLASS WINDOW: 1" LOW-E INSULATED TEMPERED DUAL GLAZED GLASS, 2" x 4 1/2" CLEAR ANODIZED ALUMINUM FRAME
11. 6'-0" W X 7'-0" H. PAIR OF STOREFRONT GLASS DOORS CLEAR ANODIZED ALUMINUM FRAME. SEE DOOR SCHEDULE ON A10.1
12. BUILDING/COLUMN BEYOND
13. 2-LAYERS 5/8" TYPE X GYP. BD. APPLIED TO UNDERSIDE OF ROOF JOIST 1-HR. FIRE RATING REF.- GA FILE NO. 5407 TYP. ALL CEILINGS
14. SUSPENDED ACOUSTICAL T-BAR CLG. TILE SYSTEM SEE REFLECTED CEILING PLAN FOR HT. AND D3.0 FOR DETAILS
15. LIGHTWEIGHT CONCRETE OVER PLYWOOD OVER FLOOR JOISTS, SEE STRUCT'L
16. ROOF/FLOOR JOISTS, SEE STRUCT.
17. 1 LAYER 5/8" TYPE X GYP. BD. APPLIED TO UNDERSIDE OF STRUCT.
18. INSTALL FIRE BLOCKING AT MID HEIGHT OF ALL FULL HT. WALLS. TYP
19. SOUND INSULATION
20. CONCRETE SLAB AND FOOTING, SEE STRUCT'L
21. CONCRETE SLAB ON GRADE, 1/4"/FT. SLOPE AWAY FROM BUILDING
22. PAINTED G.I. GUTTER WITH G.I. LINER SLOPED 1% TO SCUPPER
23. GALV. DOWNSPOUT, PAINTED
24. G.I. METAL ROOF O/ ROOFING FELT O/ 1/4" CEMENT BOARD O/ 3/4" PLYWOOD O/ WOOD FRAMING - SEE STRUCTURAL DESIGN
25. TRAPEZOIDAL CORRUGATED STEEL PANEL, O/METAL CHANNEL, O/WRB METALTECH-USA TRAPEZOIDAL CORRUGATE OR EQUAL
26. 2" X ALUMINUM TUBE
27. STOREFRONT SPANDREL GLASS WINDOW: 1" LOW-E INSULATED TEMPERED DUAL GLAZED GLASS, 2" x 4 1/2" CLEAR ANODIZED ALUMINUM FRAME GLASS SPEC. - PPG VISTA COOL(2) AZURIA SOLORBAN 60
28. 1/4" STEEL PLATE WITH CUT OUT, SEE ELEVATION. PAINTED, COLOR TO MATCH STUCCO COLOR
29. METAL WALL PANEL, WEATHER STEEL (COR-TEN FINISH) MEATLTECH-USA OR EQUAL
30. STEEL BRACING
31. HSS POST AT 48" O.C. EMBEDDED IN FULL HEIGHT OF HSS BELOW, SEE STRUCTURAL
32. WIRE MESH FENCE

FRANCO ARCHITECTS INC.
12345 Ventura Blvd. H
Studio City, CA 91604
Tel 818 754-2030
Fax 818 754-2032
Architecture and Planning

MAGNOLIA SCIENCE ACADEMY
18220 SHERMAN WAY, RESEDA, CA91335

REV	DESCRIPTION	DATE
	PLAN CHECK #1	6/14/2017

LICENSED ARCHITECT
JOHANN D. WANG
C27010
4/30/2019
RENEWAL DATE
STATE OF CALIFORNIA

PROJECT
MAGNOLIA SCIENCE ACADEMY

PROJECT ADDRESS
18220 SHERMAN WAY,
RESEDA, CA91335

DRAWING TITLE
WALL DETAILS

DRAWN BY
ISSUE DATE
6/14/2017

JOB NUMBER
DRAWING SCALE
AS NOTED

APPROVED BY:

DRAWING NUMBER
A5.4

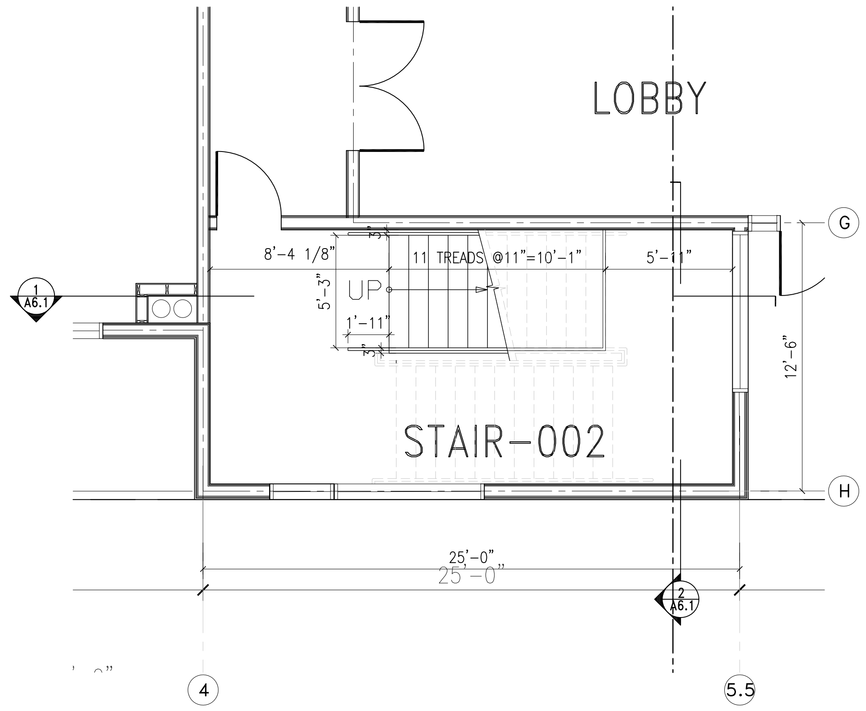

1 STAIR NO. 002 – 1ST FLOOR
SCALE: 1/4" = 1'-0"

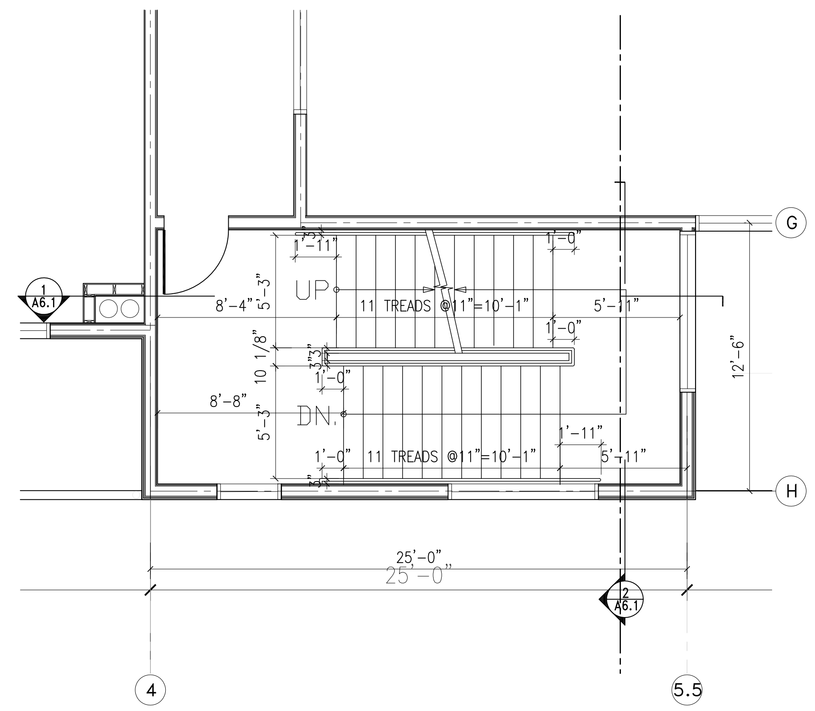

2 STAIR NO. 002 – SECOND FLOOR
SCALE: 1/4" = 1'-0"

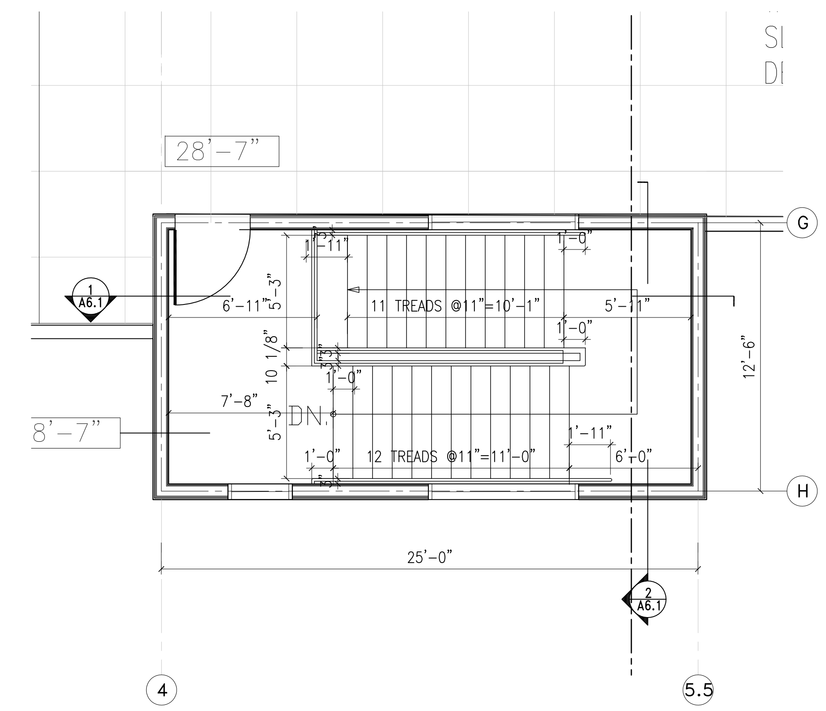

3 STAIR NO. 002 – ROOF LEVEL
SCALE: 1/4" = 1'-0"

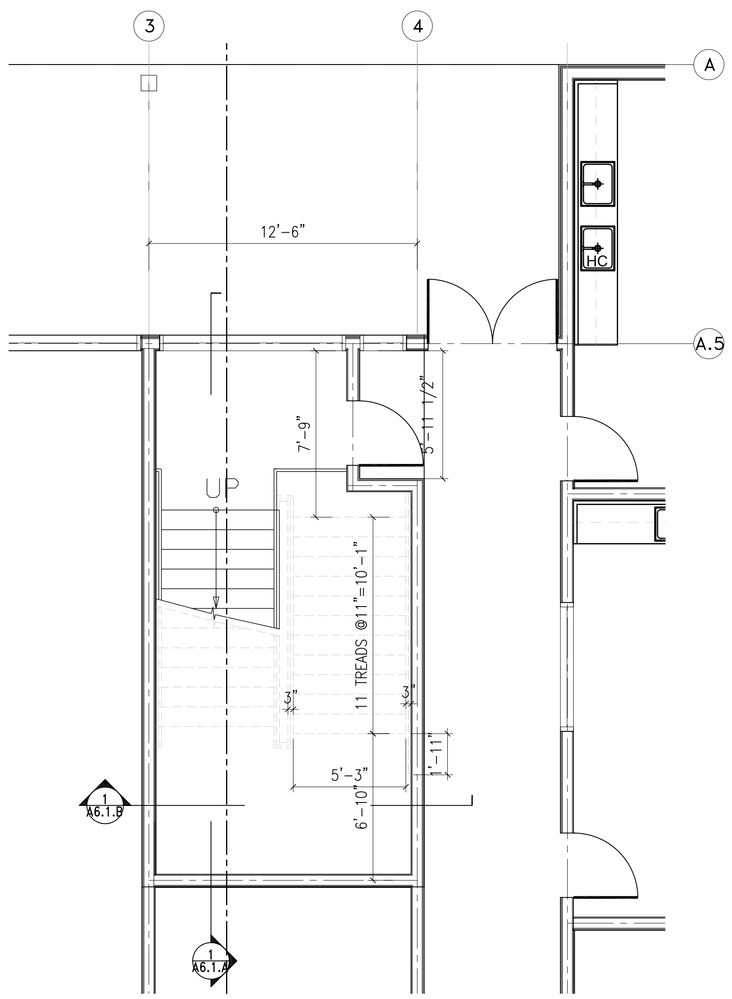

4 STAIR NO. 001 – FIRST FLOOR
SCALE: 1/4" = 1'-0"

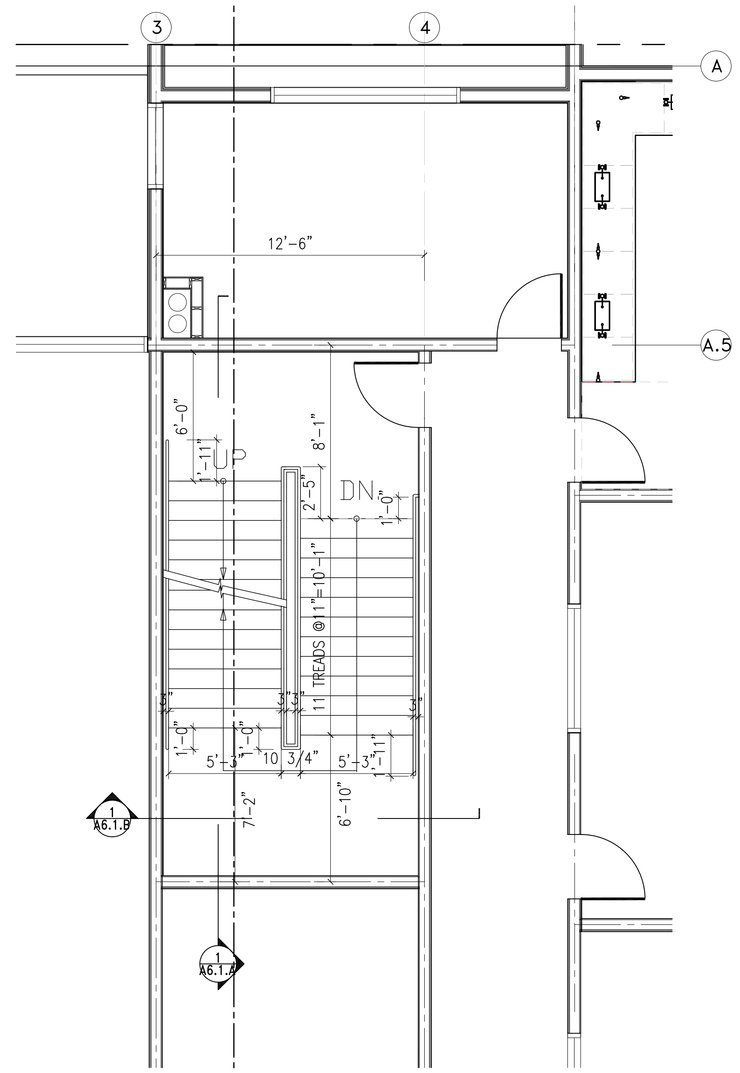

5 STAIR NO. 001 – SECOND FLOOR
SCALE: 1/4" = 1'-0"

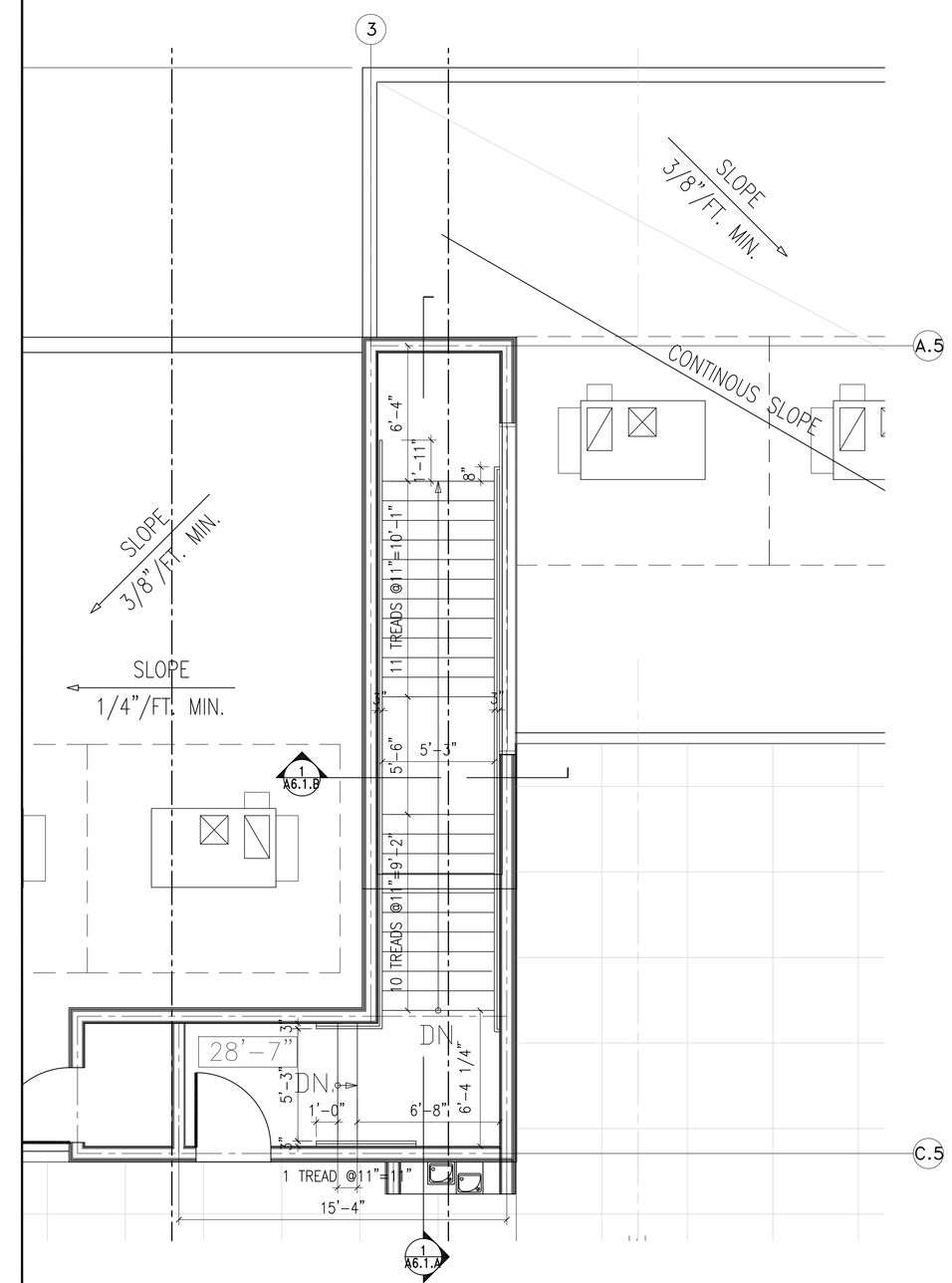

6 STAIR NO. 001 – ROOF
SCALE: 1/4" = 1'-0"

FRANCO ARCHITECTS INC.
12345 Ventura Blvd. H
Studio City, CA 91604
Tel 818 754-2030
Fax 818 754-2032
Architecture and Planning

MAGNOLIA SCIENCE ACADEMY
18220 SHERMAN WAY, RESEDA, CA91335

REV	DESCRIPTION	DATE
	PLAN CHECK #1	6/14/2017

LICENSED ARCHITECT
ARMANN D. MANO
C27010
4/30/2019
RENEWAL DATE
STATE OF CALIFORNIA

PROJECT
MAGNOLIA SCIENCE ACADEMY

PROJECT ADDRESS
18220 SHERMAN WAY,
RESEDA, CA91335

DRAWING TITLE
STAIR PLANS

DRAWN BY:
ISSUE DATE: 6/14/2017
JOB NUMBER:
DRAWING SCALE: AS NOTED
APPROVED BY:

DRAWING NUMBER
A6.0

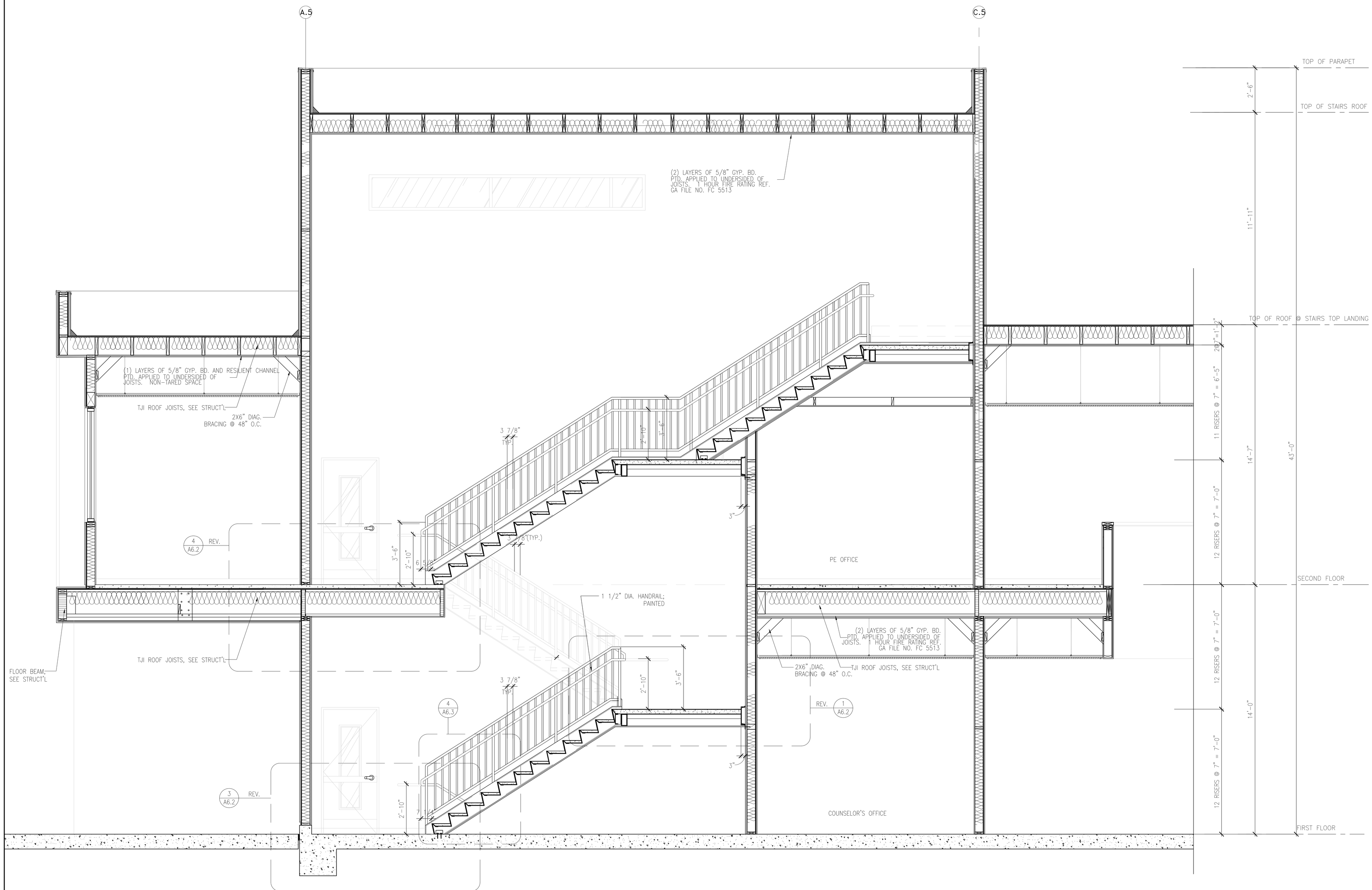

1 STAIR NO. 001 – SECTION
SCALE: 1/2" = 1'-0"

FRANCO ARCHITECTS INC.
12345 Ventura Blvd. H
Studio City, CA 91604
Tel 818 754-2030
Fax 818 754-2032
Architecture and Planning

MAGNOLIA SCIENCE ACADEMY
18220 SHERMAN WAY, RESEDA, CA91335

REV	DESCRIPTION	DATE
	PLAN CHECK #1	6/14/2017

LICENSED ARCHITECT
JOHANN D. FRANCO
C27010
4/30/2019
RENEWAL DATE
STATE OF CALIFORNIA

PROJECT
MAGNOLIA SCIENCE ACADEMY

PROJECT ADDRESS
18220 SHERMAN WAY, RESEDA, CA91335

DRAWING TITLE
STAIR SECTIONS AND DETAILS

DRAWN BY:
ISSUE DATE: 6/14/2017
JOB NUMBER:
DRAWING SCALE: AS NOTED
APPROVED BY:

DRAWING NUMBER
A6.1.A

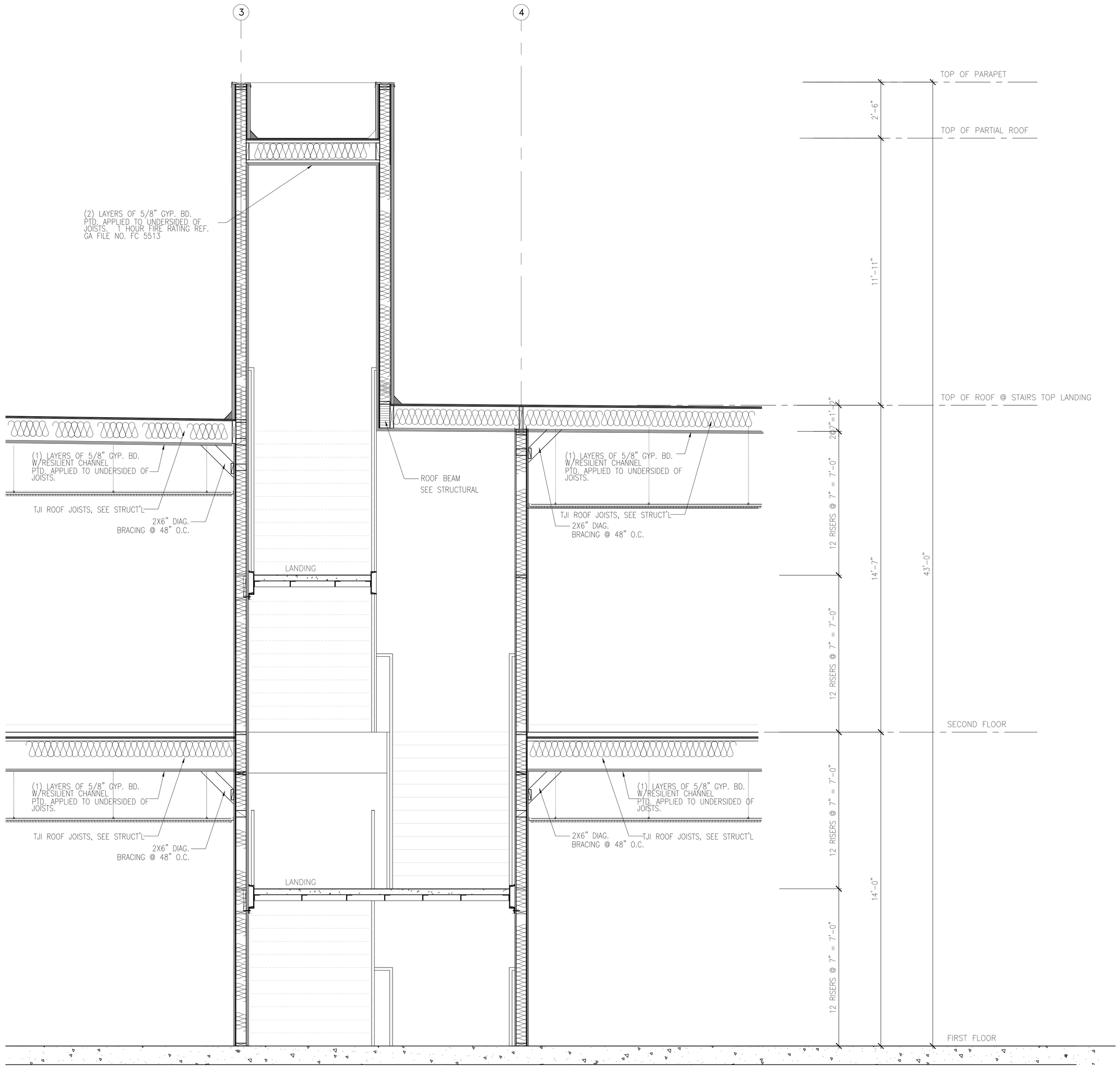

1 STAIR NO. 001 – SECTION
SCALE: 1/2" = 1'-0"

FRANCO ARCHITECTS INC.
12345 Ventura Blvd. H
Studio City, CA 91604
Tel 818 754-2030
Fax 818 754-2032
Architecture and Planning

MAGNOLIA SCIENCE ACADEMY
18220 SHERMAN WAY, RESEDA, CA91335

REV	DESCRIPTION	DATE
	PLAN CHECK #1	6/14/2017

LICENSED ARCHITECT
JOHANN D. WANG
C27010
4/30/2019
RENEWAL DATE
STATE OF CALIFORNIA

PROJECT
MAGNOLIA SCIENCE ACADEMY

PROJECT ADDRESS
18220 SHERMAN WAY,
RESEDA, CA91335

DRAWING TITLE
STAIR SECTIONS
AND DETAILS

DRAWN BY
ISSUE DATE 6/14/2017
JOB NUMBER
DRAWING SCALE AS NOTED
APPROVED BY:

DRAWING NUMBER
A6.1.B

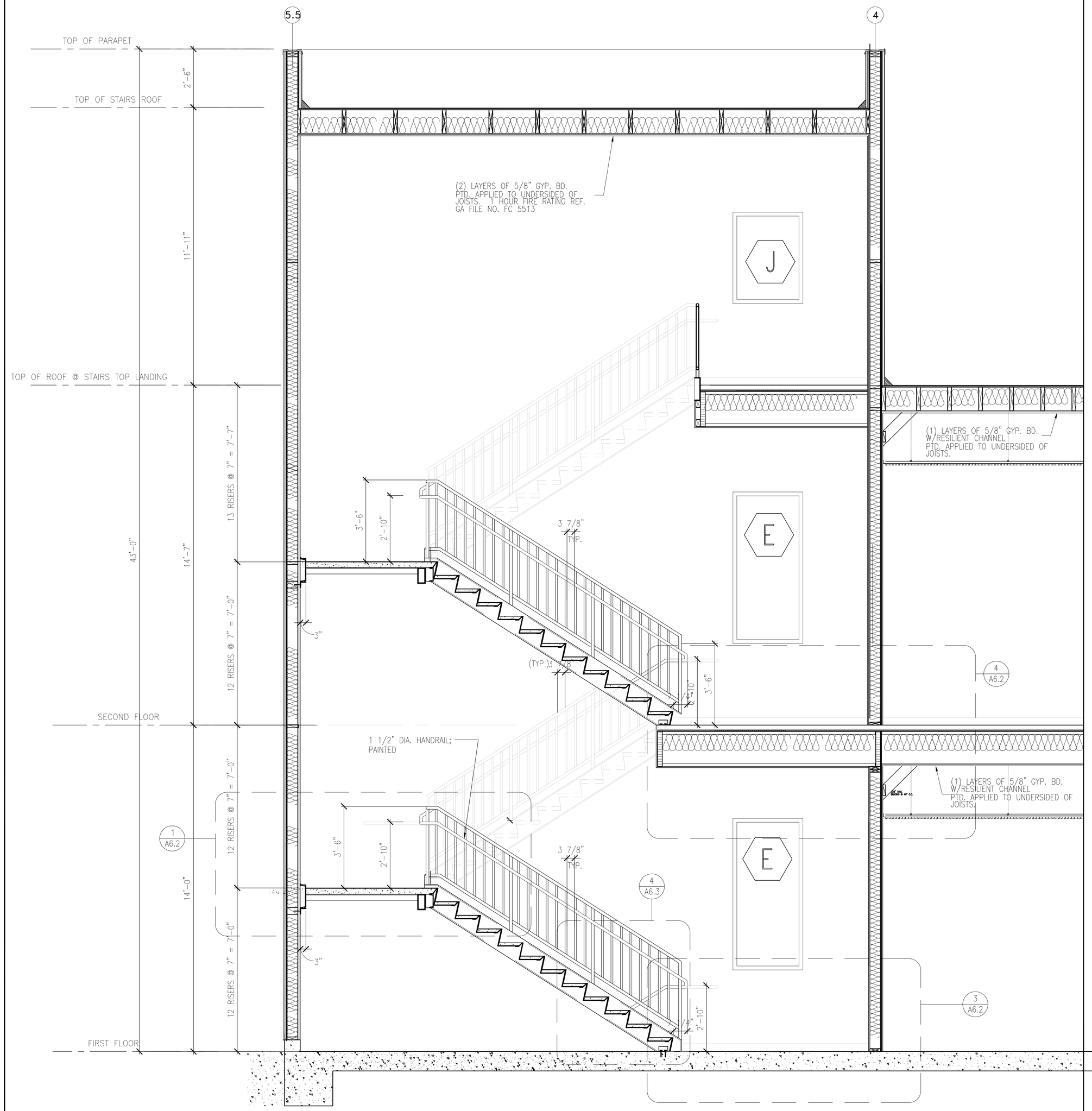

1 STAIR NO. 002 – SECTION
SCALE: 1/2" = 1'-0"

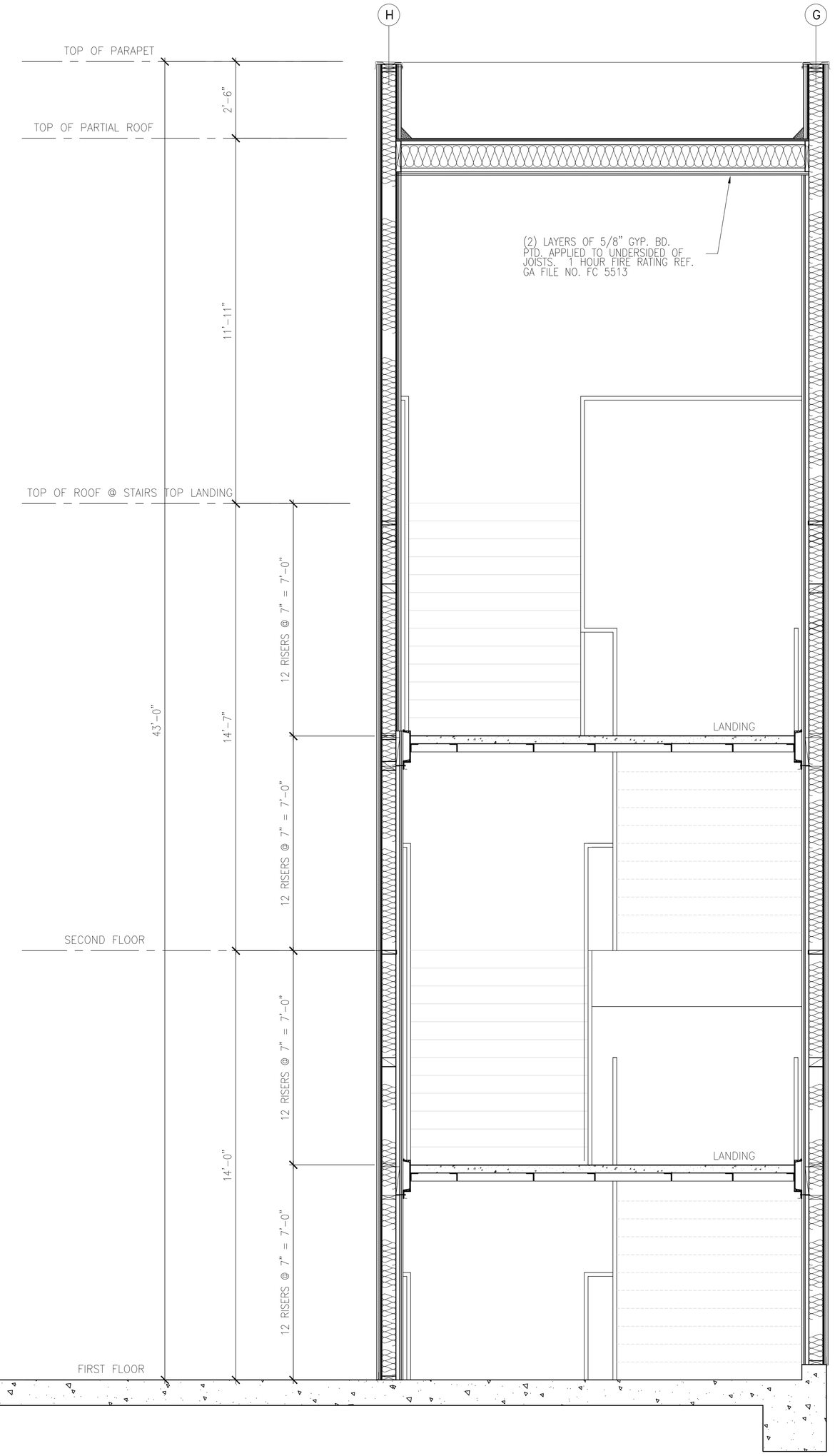

2 STAIR NO. 002 – SECTION
SCALE: 1/2" = 1'-0"

FRANCO ARCHITECTS INC.
12345 Ventura Blvd. H
Studio City, CA 91604
Tel 818 754-2030
Fax 818 754-2032
Architecture and Planning

MAGNOLIA SCIENCE ACADEMY
18220 SHERMAN WAY, RESEDA, CA91335

REV	DESCRIPTION	DATE
	PLAN CHECK #1	6/14/2017

LICENSED ARCHITECT
JOHANN D. WANG
C27010
4/30/2019
RENEWAL DATE
STATE OF CALIFORNIA

PROJECT
MAGNOLIA SCIENCE ACADEMY

PROJECT ADDRESS
18220 SHERMAN WAY, RESEDA, CA91335

DRAWING TITLE
STAIR SECTIONS AND DETAILS

DRAWN BY
ISSUE DATE 6/14/2017
JOB NUMBER
DRAWING SCALE AS NOTED
APPROVED BY:

DRAWING NUMBER
A6.1

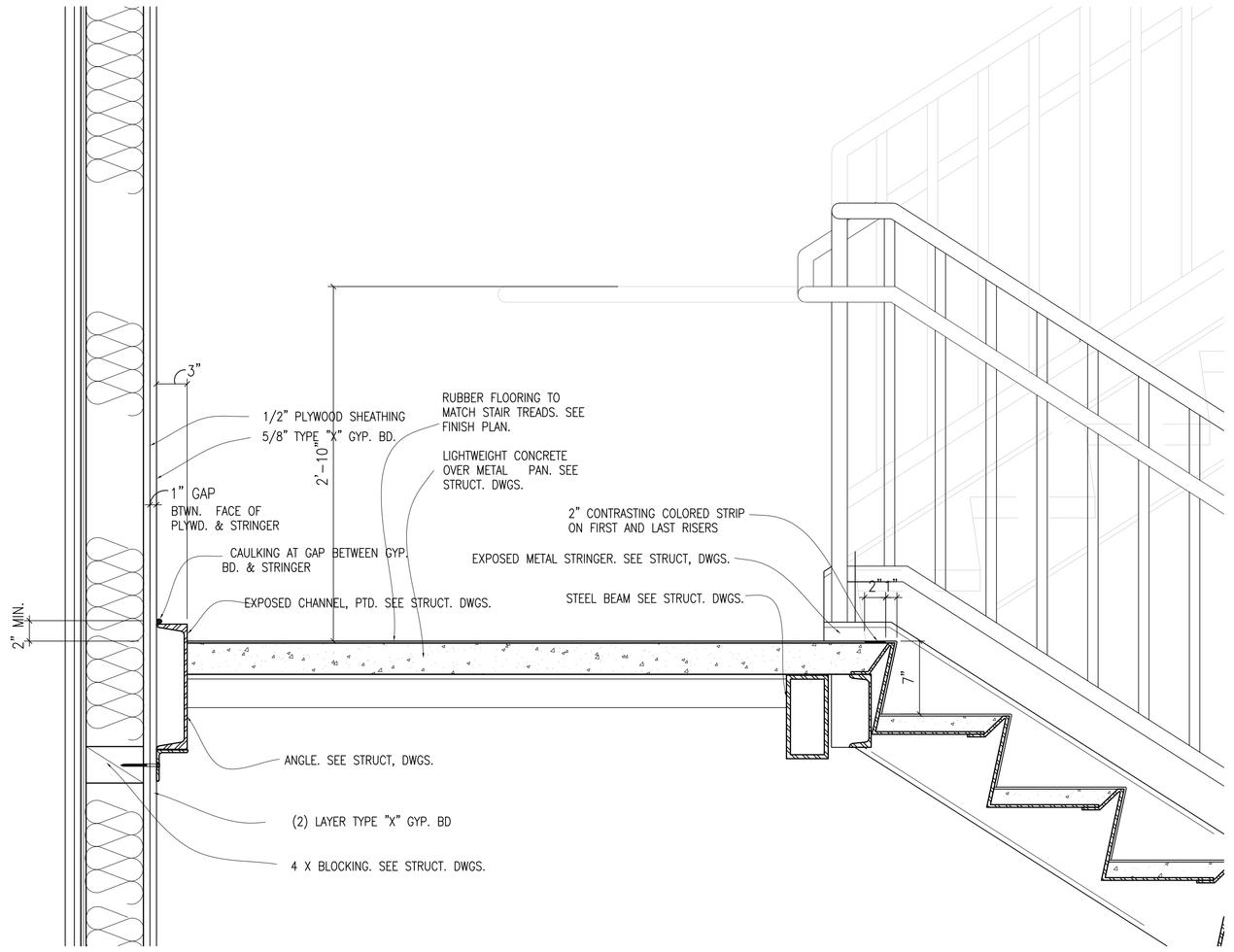

NOTE: ALL EXPOSED STL. TO BE PAINTED. COLOR T.B.D.

1 STAIRS INTERMEDIATE LANDING
SCALE: 1 1/2" = 1'-0"

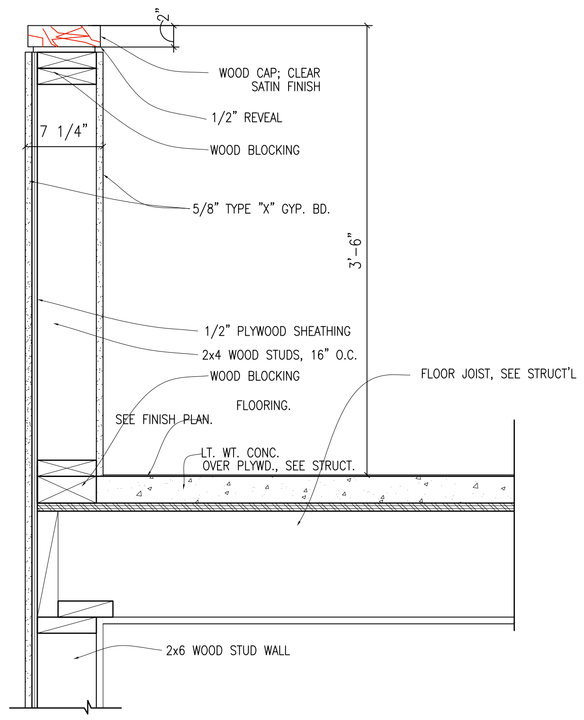

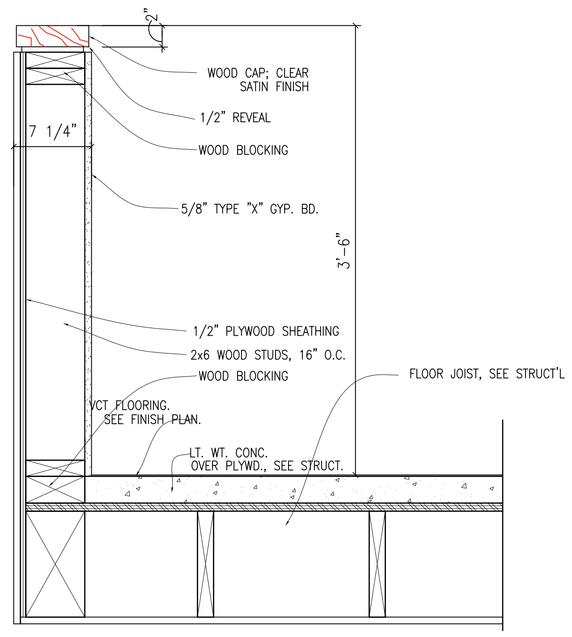

2 LOW WALL DETAIL
SCALE: 1 1/2" = 1'-0"

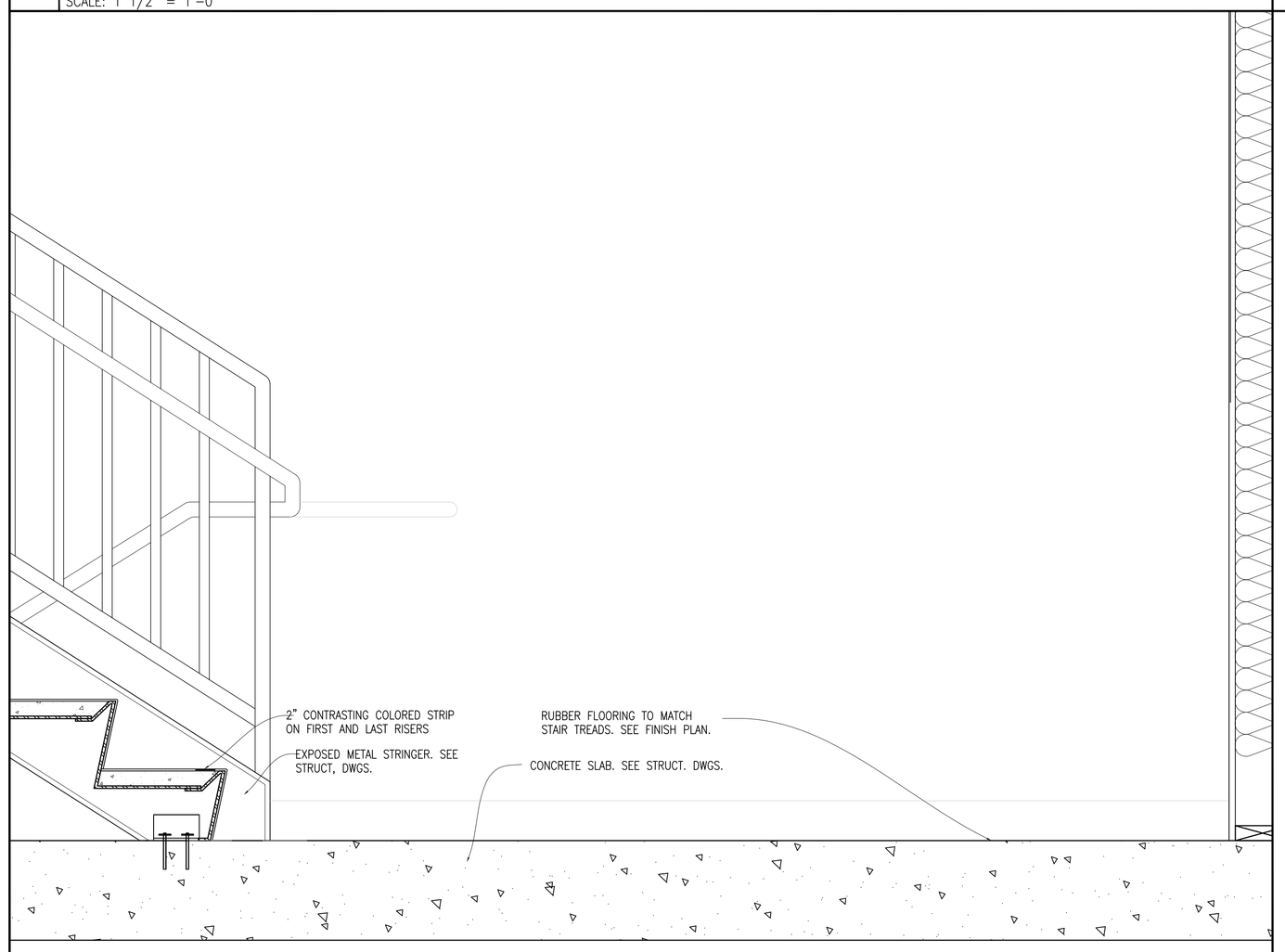

3 STAIRS INTERMEDIATE LANDING
SCALE: 1 1/2" = 1'-0"

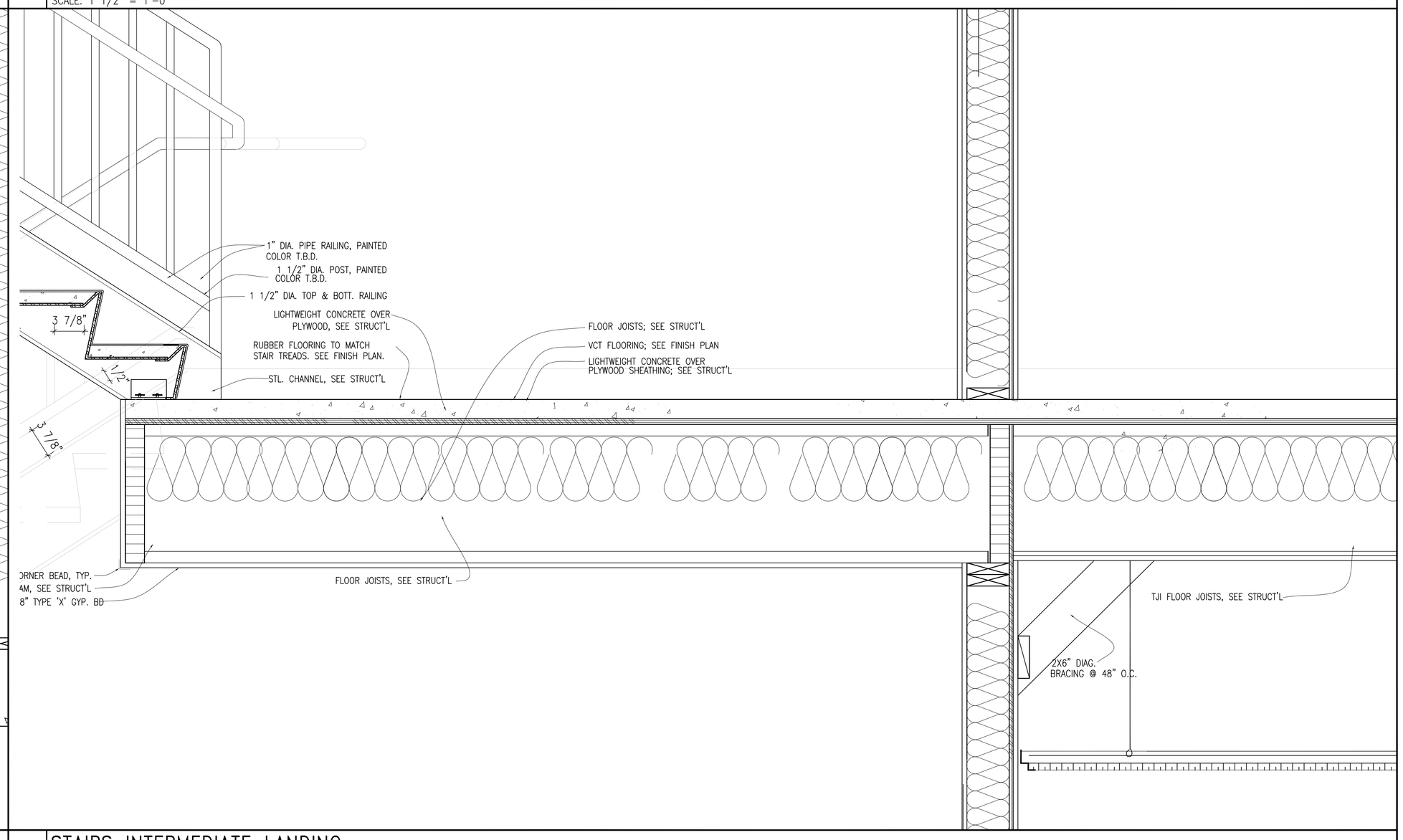

4 STAIRS INTERMEDIATE LANDING
SCALE: 1 1/2" = 1'-0"

FRANCO ARCHITECTS INC.
12345 Ventura Blvd. H
Studio City, CA 91604
Tel 818 754-2030
Fax 818 754-2032
Architecture and Planning

MAGNOLIA SCIENCE ACADEMY
18220 SHERMAN WAY, RESEDA, CA91335

REV	DESCRIPTION	DATE
	PLAN CHECK #1	6/14/2017

LICENSED ARCHITECT
JOHANN D. WANG
C27010
4/30/2019
RENEWAL DATE
STATE OF CALIFORNIA

PROJECT
MAGNOLIA SCIENCE ACADEMY

PROJECT ADDRESS
18220 SHERMAN WAY,
RESEDA, CA91335

DRAWING TITLE
STAIR SECTIONS
AND DETAILS

DRAWN BY
ISSUE DATE
6/14/2017
JOB NUMBER
DRAWING SCALE
AS NOTED
APPROVED BY:
DRAWING NUMBER
A6.2

NOTES: 1. ALL EXPOSED STEEL SHALL BE GRIND SMOOTH AND PAINTED.
2. 2" WIDE CONTRASTING COLORED STRIP ON ALL TREADS.

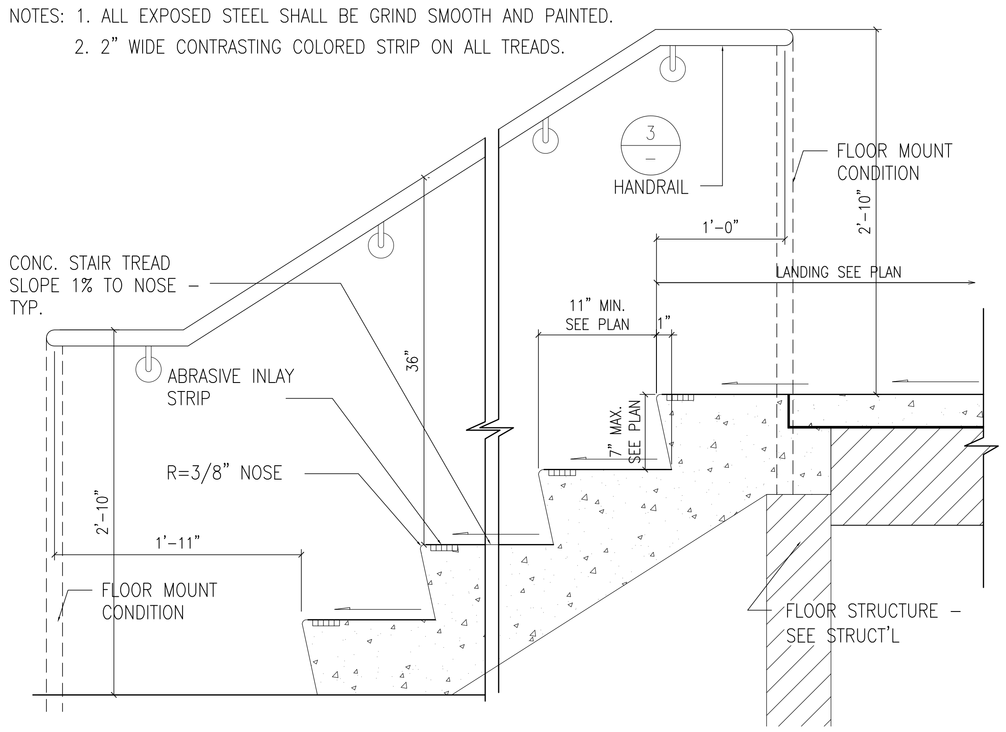

1 TYPICAL CONC. STAIR DETAIL
SCALE: 1 1/2" = 1'-0"

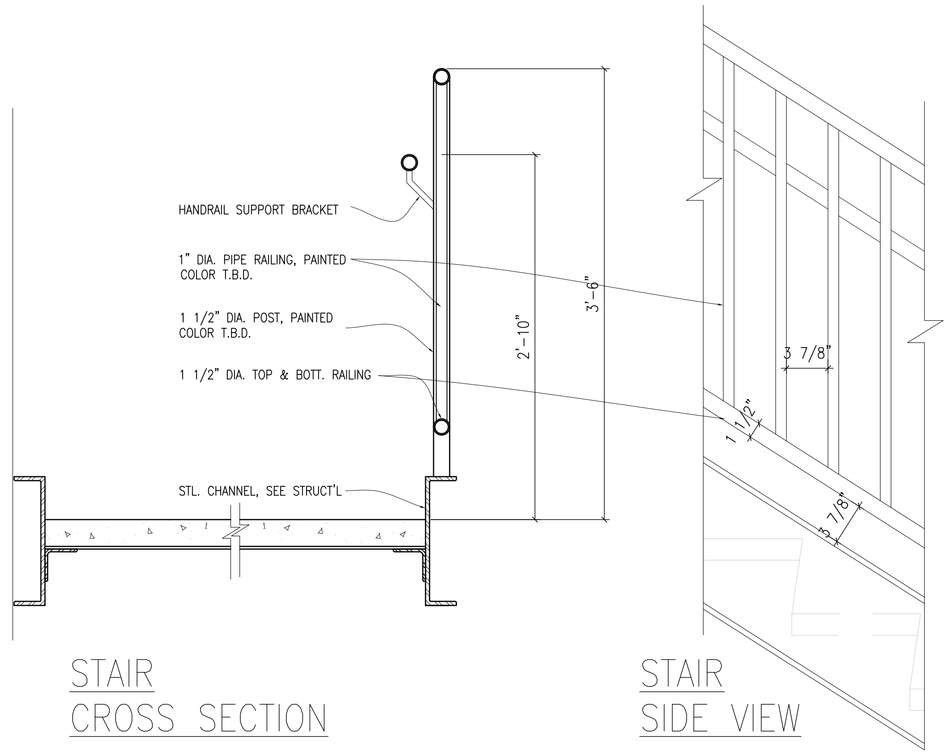

2 STAIR GUARDRAIL DETAIL
SCALE: 1 1/2" = 1'-0"

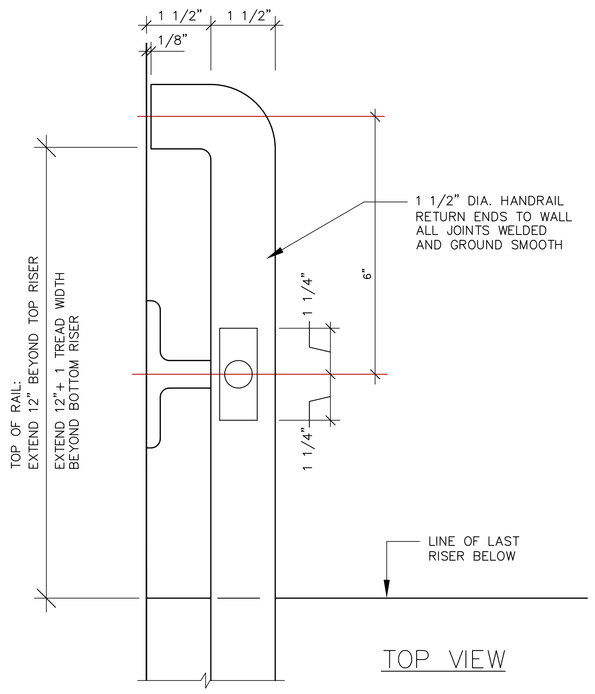

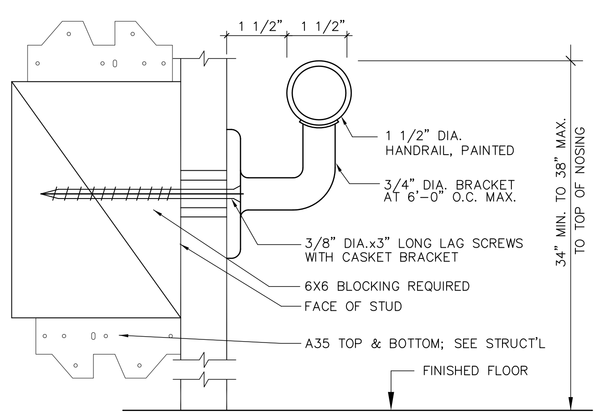

3 STAIR HANDRAIL DETAIL
SCALE: 6" = 1'-0"

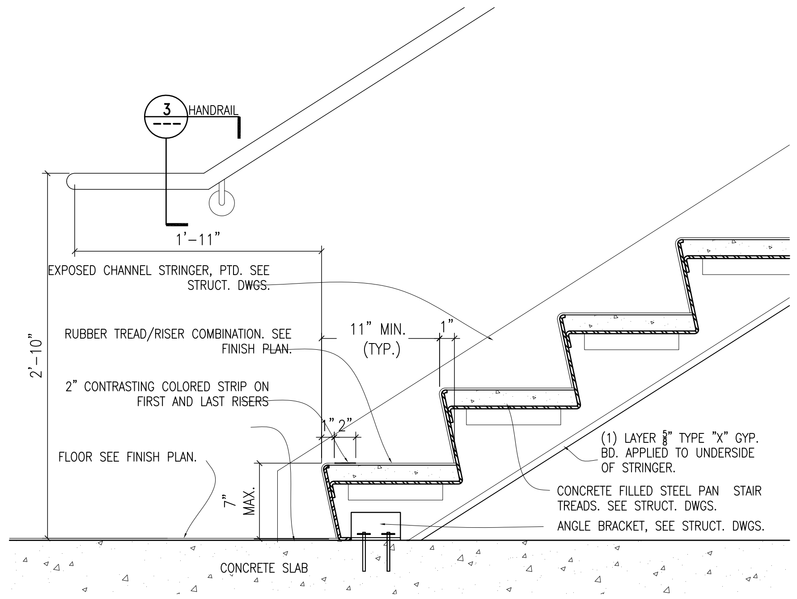

4 STAIR BOTTOM TREAD DETAIL
SCALE: 1 1/2" = 1'-0"

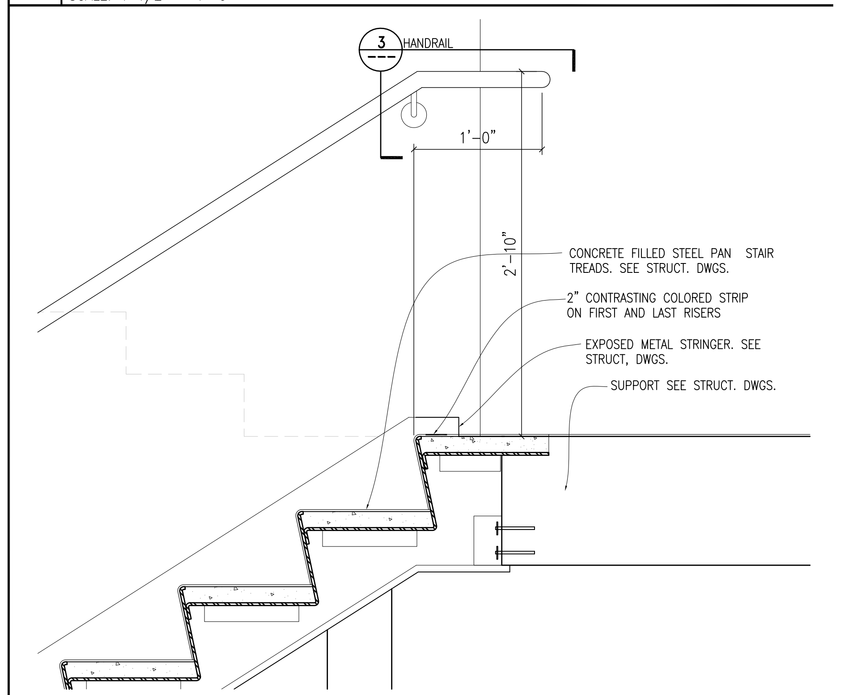

5 STAIR TOP TREAD DETAIL
SCALE: 1 1/2" = 1'-0"

FRANCO ARCHITECTS INC.
12345 Ventura Blvd. H
Studio City, CA 91604
Tel 818 754-2030
Fax 818 754-2032
Architecture and Planning

MAGNOLIA SCIENCE ACADEMY
18220 SHERMAN WAY, RESEDA, CA91335

REV	DESCRIPTION	DATE
	PLAN CHECK #1	6/14/2017

LICENSED ARCHITECT
JOHANN D. WANG
C27010
4/30/2019
RENEWAL DATE
STATE OF CALIFORNIA

PROJECT
MAGNOLIA SCIENCE ACADEMY

PROJECT ADDRESS
18220 SHERMAN WAY, RESEDA, CA91335

DRAWING TITLE
STAIR SECTIONS AND DETAILS

DRAWN BY
ISSUE DATE 6/14/2017
JOB NUMBER
DRAWING SCALE AS NOTED
APPROVED BY:

DRAWING NUMBER
A6.3

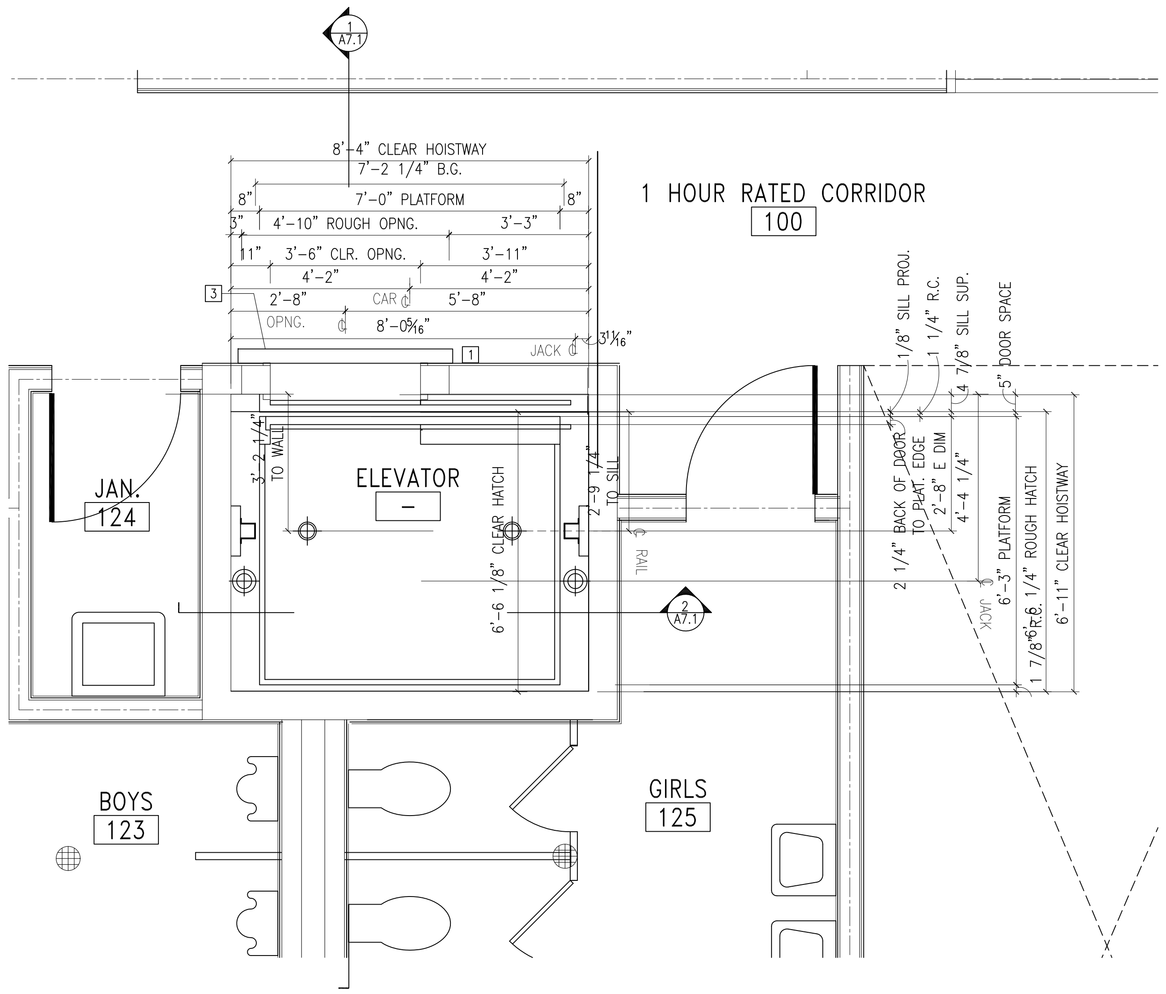

NOTE: AN ENCLOSED ELEVATOR LOBBY AT EACH FLOOR IS NOT REQUIRED PER 2016 CBC SEC. 3006.2 (THE ELEVATOR SHAFT ONLY CONNECTS TWO FLOORS)

NOTES

1. PROVIDE LOCK AT ELEVATOR CALL BUTTON.
2. PER CHAPTER 30 OF THE CBC, NO VENTING IS NECESSARY FOR A 3-STORY ELEVATOR.
3. INSTALL SMOKE GUARD AS REQUIRED. SEE DETAIL 9/D5.0

1 ELEVATOR AND MACHINE ROOM- FIRST FLOOR PLAN
SCALE: 1/2" = 1'-0"

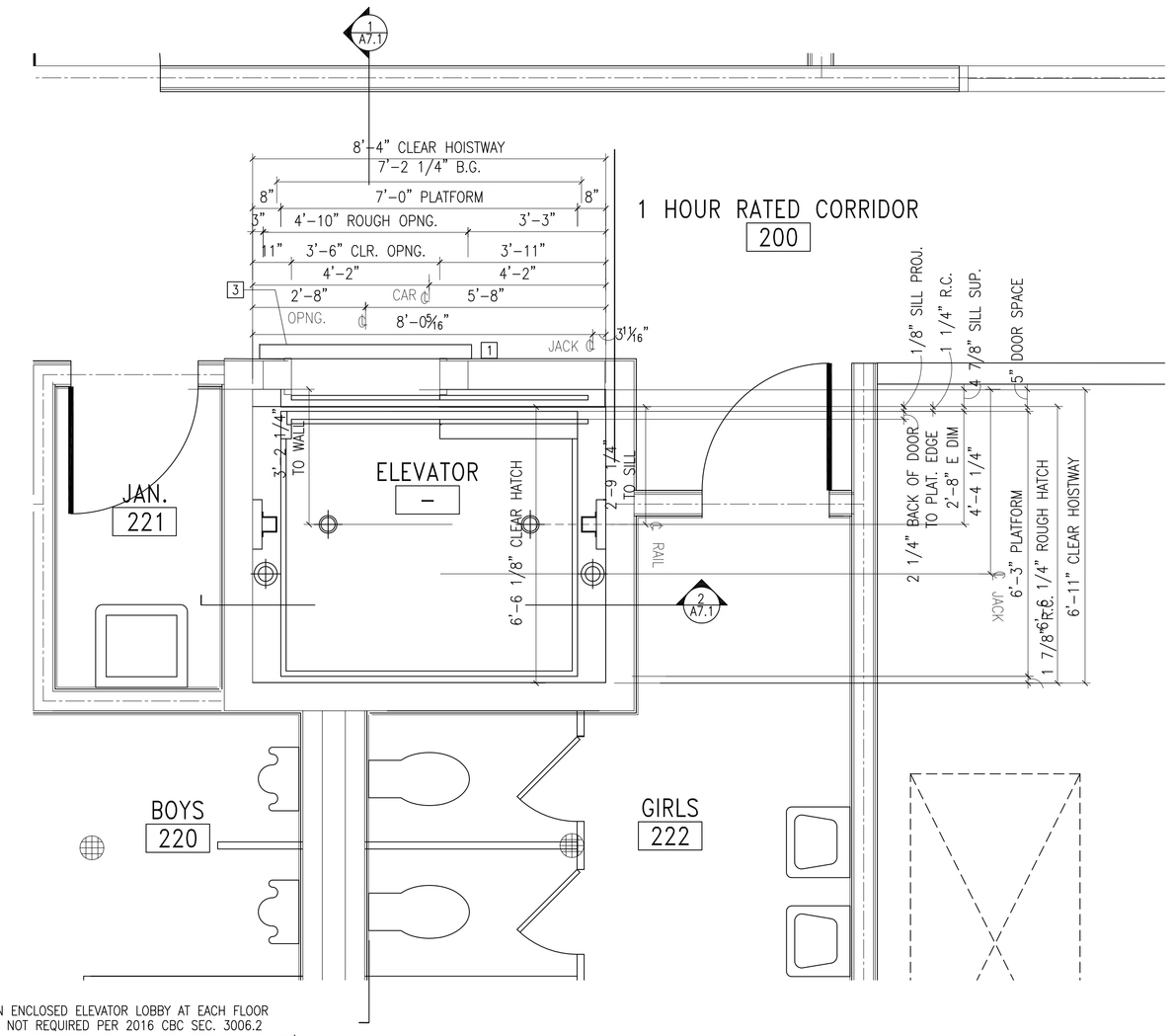

NOTE: AN ENCLOSED ELEVATOR LOBBY AT EACH FLOOR IS NOT REQUIRED PER 2016 CBC SEC. 3006.2 (THE ELEVATOR SHAFT ONLY CONNECTS TWO FLOORS)

NOTES

1. PROVIDE LOCK AT ELEVATOR CALL BUTTON.
2. PER CHAPTER 30 OF THE CBC, NO VENTING IS NECESSARY FOR A 3-STORY ELEVATOR.
3. INSTALL SMOKE GUARD AS REQUIRED. SEE DETAIL 9/D5.0

2 ELEVATOR AND MACHINE ROOM- 2ND FLOOR PLAN
SCALE: 1/2" = 1'-0"

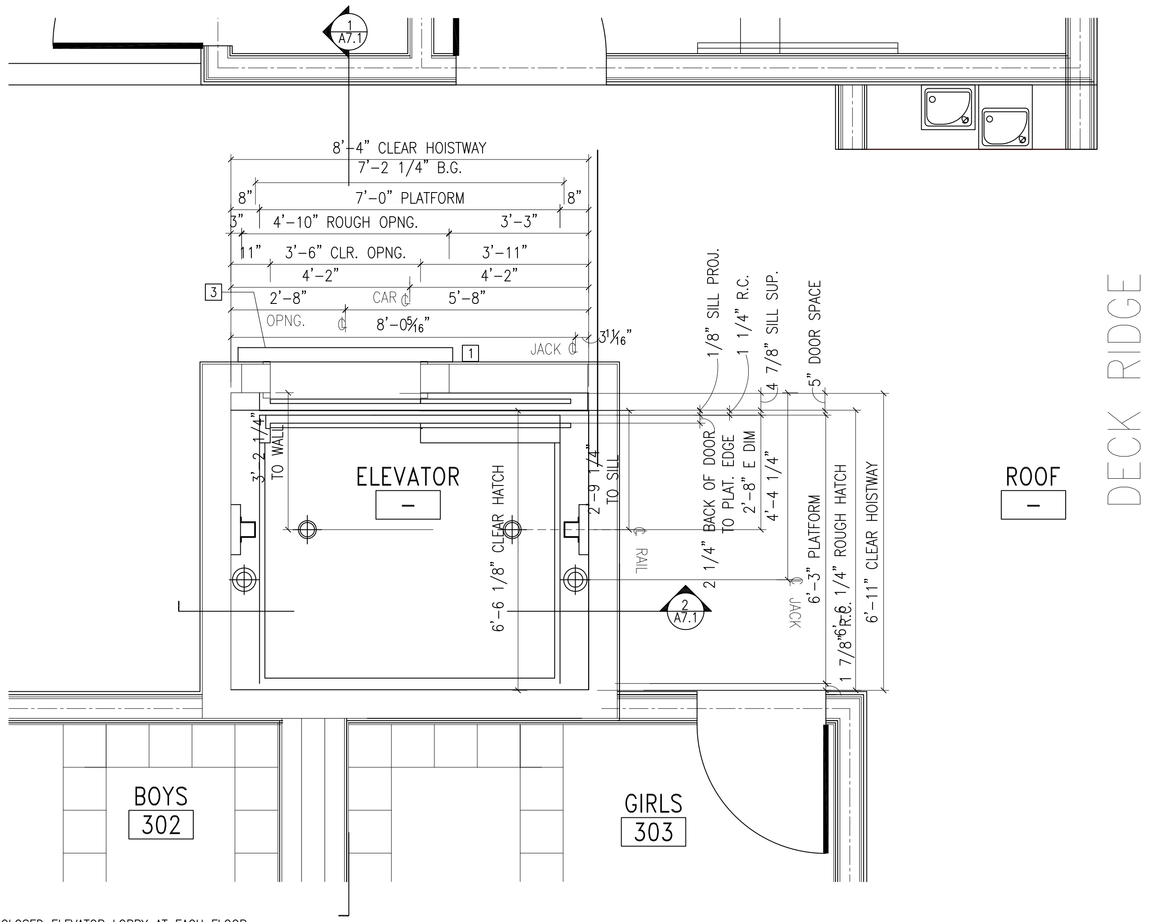

NOTE: AN ENCLOSED ELEVATOR LOBBY AT EACH FLOOR IS NOT REQUIRED PER 2016 CBC SEC. 3006.2 (THE ELEVATOR SHAFT ONLY CONNECTS TWO FLOORS)

NOTES

1. PROVIDE LOCK AT ELEVATOR CALL BUTTON.
2. PER CHAPTER 30 OF THE CBC, NO VENTING IS NECESSARY FOR A 3-STORY ELEVATOR.
3. INSTALL SMOKE GUARD AS REQUIRED. SEE DETAIL 9/D5.0

3 ELEVATOR AND MACHINE ROOM- ROOF PLAN
SCALE: 1/2" = 1'-0"

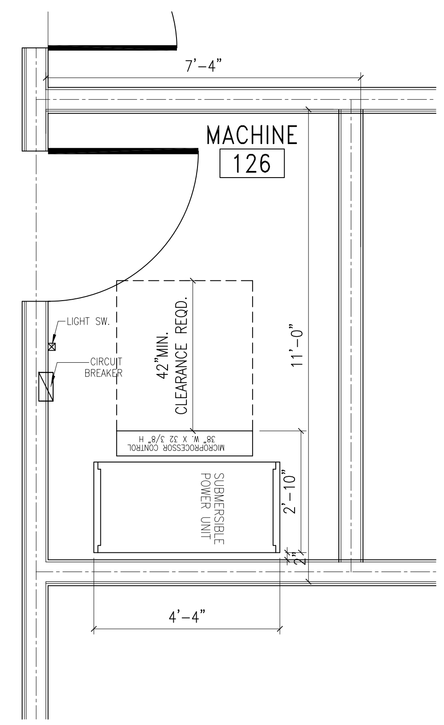

GENERAL NOTES:

1. ELEVATOR MACHINE ROOM THAT CONTAIN SOLID-STATE EQUIPMENT FOR ELEVATOR OPERATION SHALL BE PROVIDED WITH AN INDEPENDENT VENTILATION OR AIR-CONDITIONING SYSTEM TO PROTECT AGAINST THE OVERHEATING OF THE ELECTRICAL EQUIPMENT. THE SYSTEM SHALL BE CAPABLE OF MAINTAINING TEMPERATURES WITHIN THE RANGE ESTABLISHED FOR THE ELEVATOR EQUIPMENT.

4 MACHINE ROOM
SCALE: 1/2" = 1'-0"

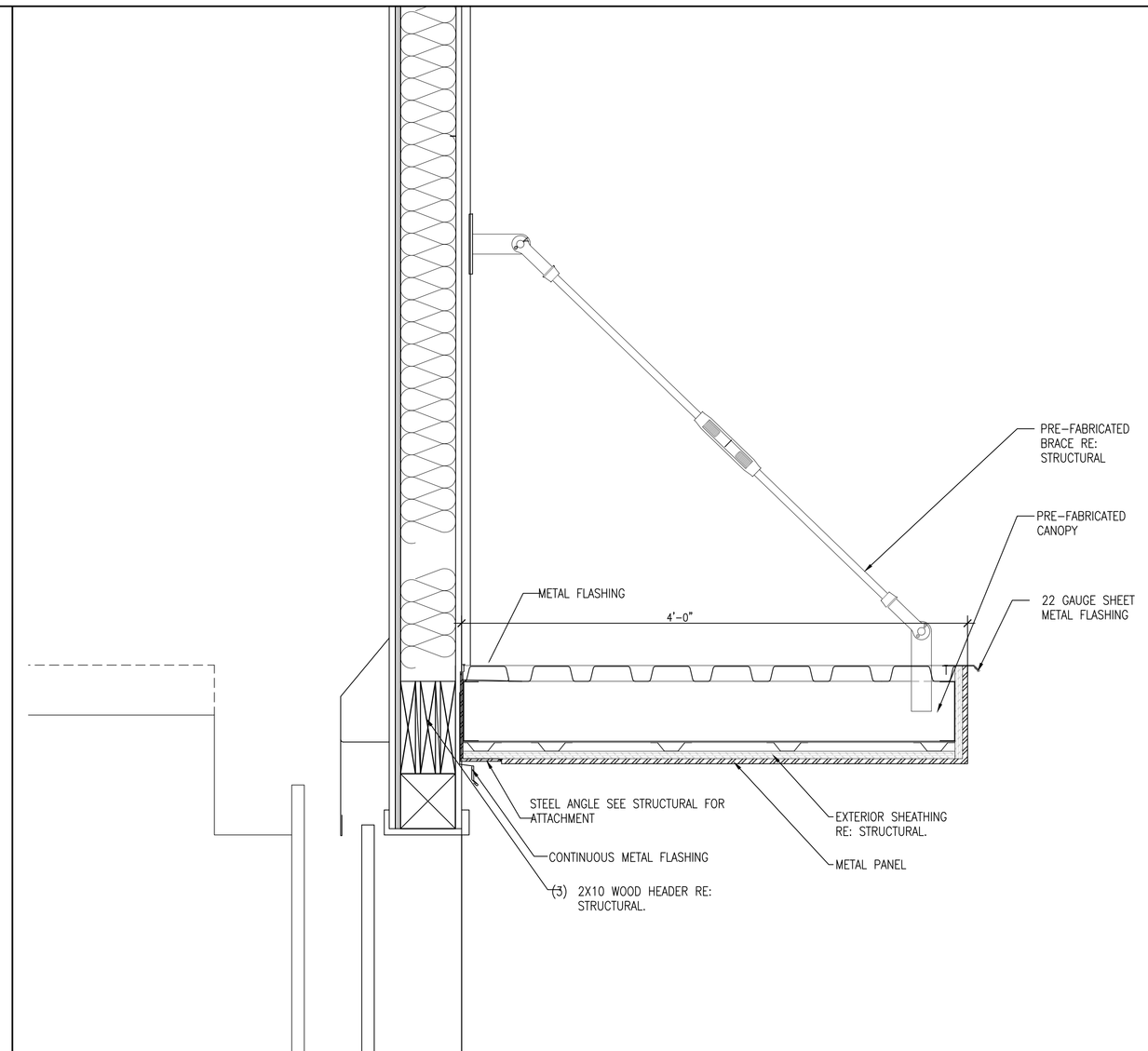

5 CANOPY DETAIL AT ELEVATOR
SCALE: 1 1/2" = 1'-0"

FRANCO ARCHITECTS INC.
12345 Ventura Blvd. H
Studio City, CA 91604
Tel 818 754-2030
Fax 818 754-2032
Architecture and Planning

MAGNOLIA SCIENCE ACADEMY
18220 SHERMAN WAY, RESEDA, CA91335

REV	DESCRIPTION	DATE
	PLAN CHECK #1	6/14/2017

LICENSED ARCHITECT
JOHANN D. WANG
C27010
4/30/2019
RENEWAL DATE
STATE OF CALIFORNIA

PROJECT
MAGNOLIA SCIENCE ACADEMY

PROJECT ADDRESS
18220 SHERMAN WAY, RESEDA, CA91335

DRAWING TITLE
ELEVATOR PLANS

DRAWN BY
ISSUE DATE 6/14/2017
JOB NUMBER
DRAWING SCALE AS NOTED
APPROVED BY:

DRAWING NUMBER
A7.0

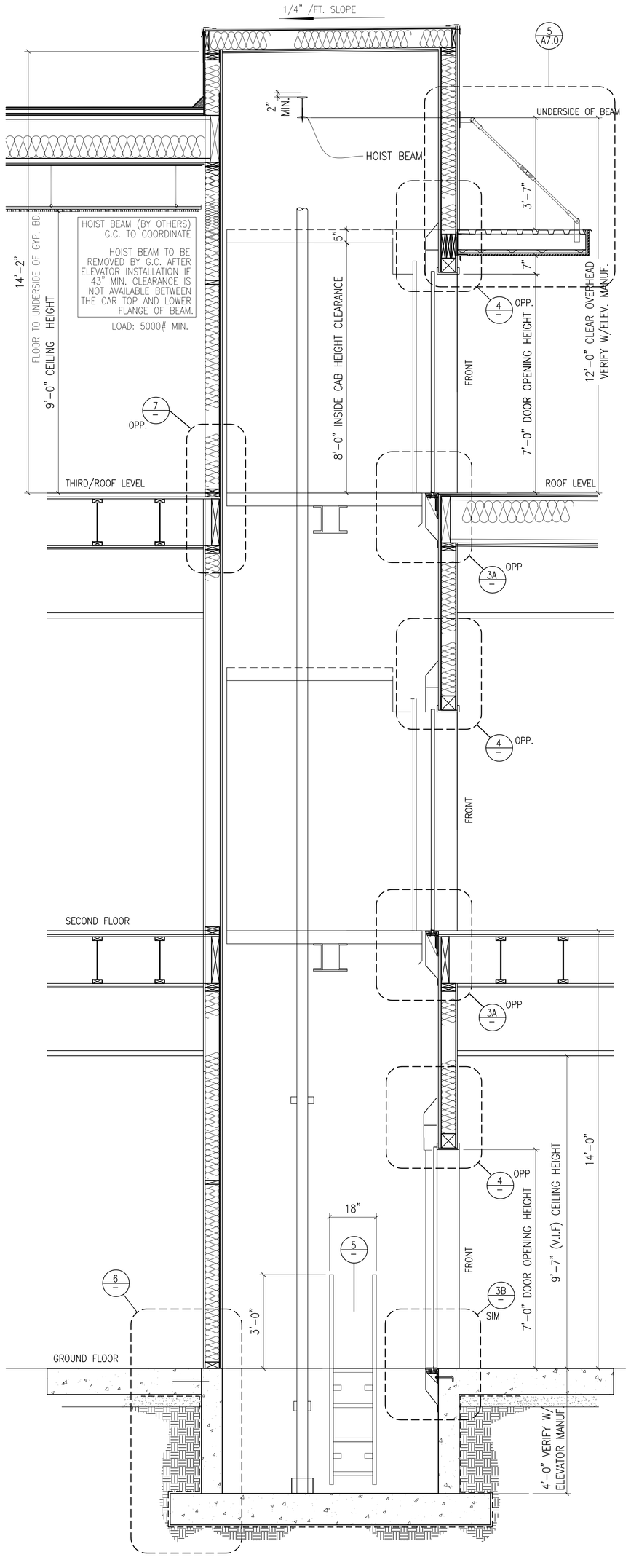

1 ELEVATOR SHAFT SECTION
SCALE: 1/2" = 1'-0"

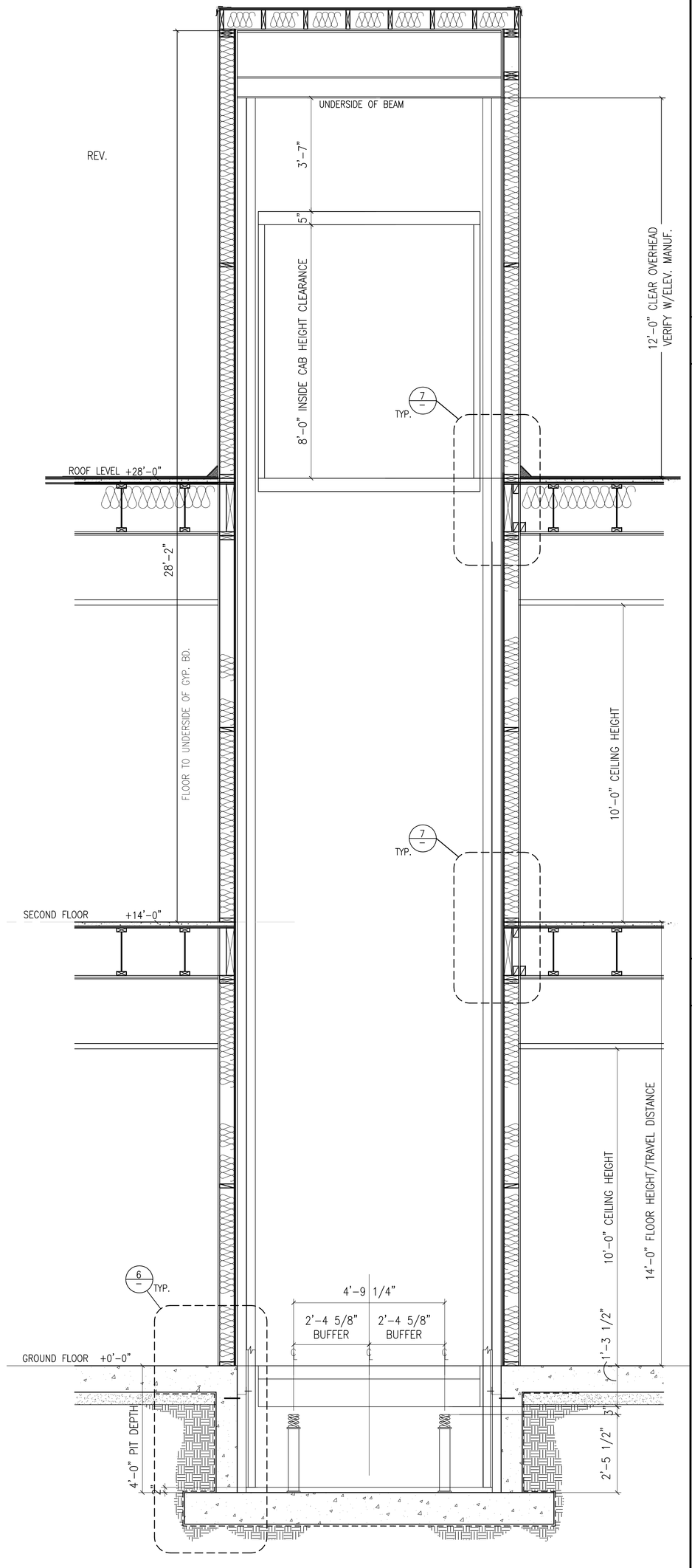

2 ELEVATOR SHAFT SECTION
SCALE: 1/2" = 1'-0"

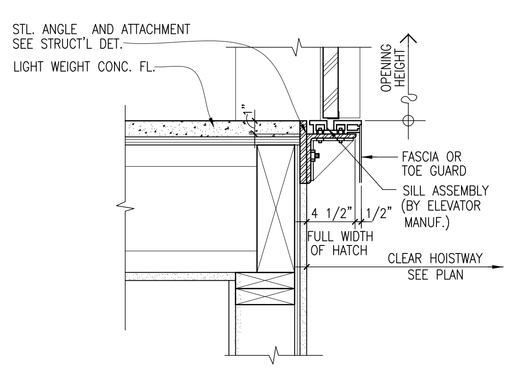

A STEEL AND CONC. DECK CONDITION AT SECOND FLOOR

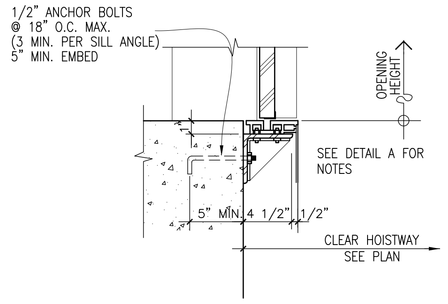

B STRUCTURAL CONC. FLOOR CONDITION

3 ELEVATOR SHAFT DETAIL AT FLOOR LEVEL
SCALE: 1 1/2" = 1'-0"

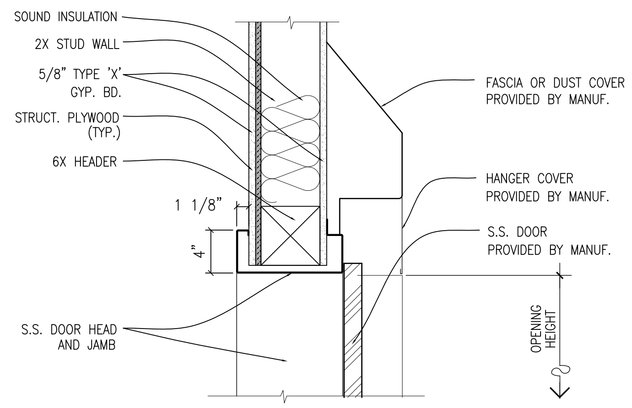

4 HEADER AT ELEVATOR DOOR
SCALE: 1 1/2" = 1'-0"

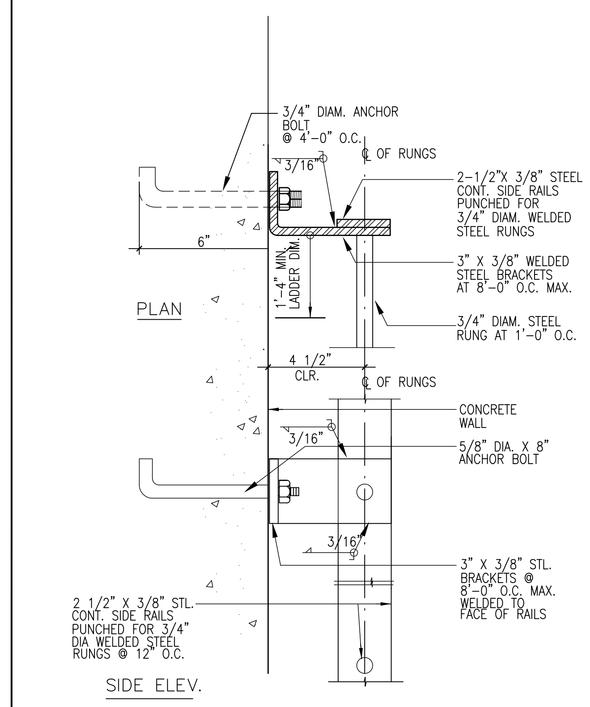

5 PIT LADDER
SCALE: 3" = 1'-0"

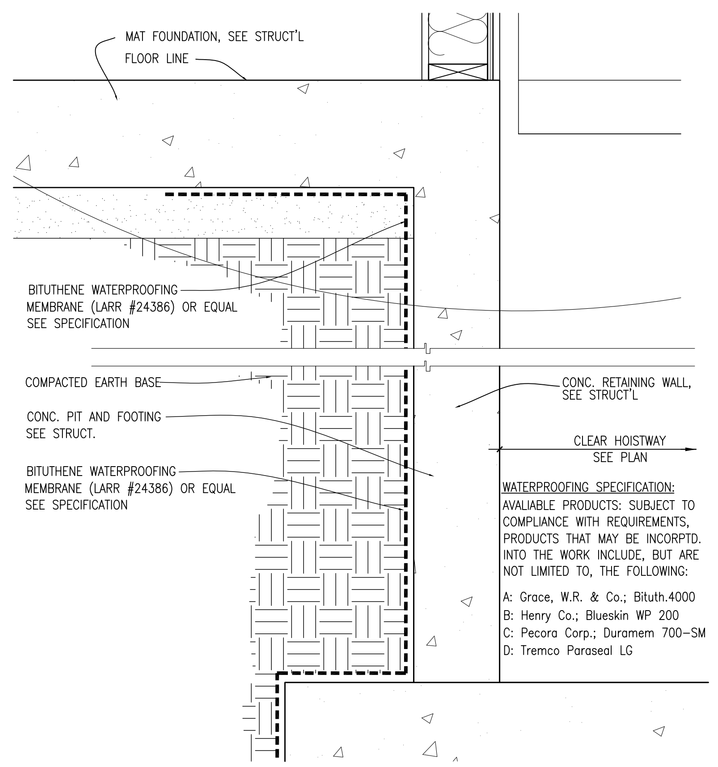

6 ELEVATOR PIT DETAIL
SCALE: 1 1/2" = 1'-0"

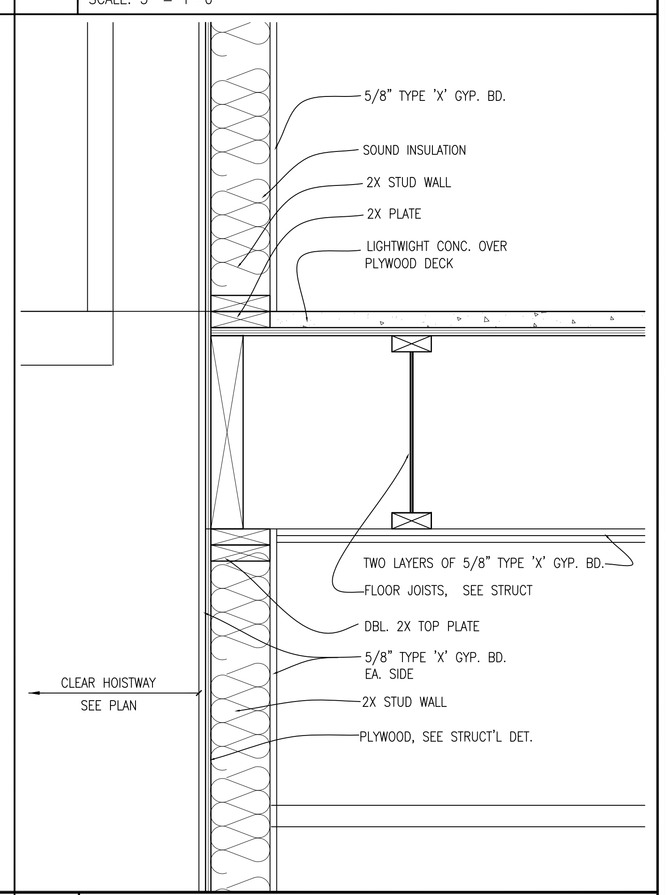

7 ELEVATOR SHAFT DETAIL AT 2ND FLOOR
SCALE: 1 1/2" = 1'-0"

FRANCO ARCHITECTS INC.
12345 Ventura Blvd. H
Studio City, CA 91604
Tel 818 754-2030
Fax 818 754-2032
Architecture and Planning

MAGNOLIA SCIENCE ACADEMY
18220 SHERMAN WAY, RESEDA, CA91335

REV	DESCRIPTION	DATE
	PLAN CHECK #1	6/14/2017

LICENSED ARCHITECT JOHANN D. WANG C27010 4/30/2019 RENEWAL DATE STATE OF CALIFORNIA

PROJECT: MAGNOLIA SCIENCE ACADEMY
PROJECT ADDRESS: 18220 SHERMAN WAY, RESEDA, CA91335
DRAWING TITLE: ELEVATOR SECTIONS AND DETAILS
DRAWN BY:
ISSUE DATE: 6/14/2017
JOB NUMBER:
DRAWING SCALE: AS NOTED
APPROVED BY:
DRAWING NUMBER: A7.1

1 NOTES PER SCHINDLER ELEVATOR CORP.

SCALE: NONE

PURCHASER NOTES PER SCHINDLER ELEVATOR CORPORATION:

1. CLEAR, PLUMB HOISTWAY, WITH VARIATIONS NOT TO EXCEED 1" AT ANY POINT.
2. HOISTWAY ENCLOSURE TO BE FIRE RATED. (RULE 100.1)
3. 75% BEVEL GUARDS ON ALL PROJECTIONS, RECESSES OR SETBACKS OVER 2" EXCEPT ON SIDE USED FOR LOADING/UNLOADING. (RULE 100.6)
4. VENTING OF THE HOISTWAY. (RULE 100.4)
5. ADEQUATE SUPPORT FOR RAIL BRACKETS, INCLUDING DIVIDER BEAMS FOR MULTIPLE ELEVATORS IN A COMMON HOISTWAY, AT EACH FLOOR, 10'-0" ABOVE TOP LANDING AND/OR INTERMEDIATE LOCATIONS. SEE SPECIFICATIONS AND DATA FOR MAXIMUM BRACKET SPACING.
6. BLOCKOUT/CUTOUT THRU WALL AS REQUIRED TO ACCOMMODATE HALL BUTTON BOXES, SIGNAL FIXTURES AND THEIR PATCHING.
7. ALL BARRICADES EITHER OUTSIDE OF ELEVATOR HOISTWAY OR BETWEEN ELEVATORS INSIDE OF HOISTWAYS AS REQUIRED.
8. DRY PIT REINFORCED TO SUSTAIN VERTICAL FORCES FROM RAILS & BUFFERS. (RULES 106.1B, 100.2A & 1308.2)
9. CONVENIENCE OUTLET AND LIGHT FIXTURE IN PIT. (RULE 106.1E)
10. PIT LADDER FOR EACH ELEVATOR EXTENDING NOT LESS 3'-6" ABOVE BOTTOM LANDING AND ALL WALKI-IN PITS. (RULE 106.1D)
11. FOR REMOTE PUMP ROOMS, PROVIDE CLEAR ACCESS ABOVE CEILING OR FURNISH TRENCH IN FLOOR FOR OIL LINE AND WIRING DUCT FROM PUMP ROOM TO ELEVATOR HATCH.
12. PROVIDE 8"x16" CUTOUT THROUGH HOISTWAY WALL FOR OIL LINE & WIRING DUCT. FOR ACTUAL LOCATION, COORDINATE WITH SCHINDLER FIELD SUPERINTENDENT AT JOB SITE.
13. ACCESS TO MACHINE ROOM AND MACHINERY SPACE. (RULE 101.3)
14. LIGHTING, VENTILLATION & HEATING OF MACHINE ROOM & MACHINERY SPACE (RULE 101.3). MACHINE ROOM TEMPERATURE TO BE MAINTAINED BETWEEN 55'F AND 90'F. SEE SCHINDLER POWER SUPPLY DATA SHEET.
15. A FUSED DISCONNECT SWITCH OR CIRCUIT BREAKER FOR EACH ELEVATOR, LOCATED PER THE NATIONAL ELECTRICAL CODE (NFPA NO. 70 RULE 620-51A AND 620-51B1) SEE SCHINDLER POWER SUPPLY DATA SHEET. WHERE PRACTICABLE, LOCATE INSIDE MACHINE ROOM ADJACENT TO THE DOOR.
16. SUITABLE FEEDER AND BRANCH WIRING CIRCUITS, AS REQUIRED FOR SIGNAL SYSTEM AND POWER OPERATED DOOR, INCLUDING MAIN LINE SWITCH. SEE SCHINDLER POWER SUPPLY DATA SHEET.
17. FEEDER AND BRANCH WIRING CIRUITS FOR CAR LIGHT AND FAN, INCLUDING MAIN LINE SWITCH. SEE SCHINDLER POWER SUPPLY DATA SHEET.
18. CONVENIENCE OUTLET ON EACH CONTROL PANELS IN MACHINE ROOM.
19. TELEPHONE OUTLET ON ONE OF THE CONTROL PANELS IN MACHINE ROOM.
20. CLASS "C" FIRE EXTINGUISHERS IN ELECTRICAL MACHINERY AND CONTROL SPACES. EXTINGUISHERS SHALL BE LOCATED CONVENIENT TO THE ACCESS DOOR.

2 DISABLED ACCESS NOTES

SCALE: NONE

11B-407 ELEVATORS
11B-407.1 GENERAL. ELEVATORS SHALL COMPLY WITH SECTION 11B-407 AND WITH ASME A17.1. THEY SHALL BE PASSENGER ELEVATORS AS CLASSIFIED BY ASME A17.1. ELEVATOR OPERATION SHALL BE AUTOMATIC.
11B-407.1.1 COMBINED PASSENGER AND FREIGHT ELEVATORS. WHEN THE ONLY ELEVATORS PROVIDED FOR USE BY THE PUBLIC AND EMPLOYEES ARE COMBINATION PASSENGER AND FREIGHT ELEVATORS, THEY SHALL COMPLY WITH SECTION 11B-407 AND WITH ASME A17.1.
11B-407.2 ELEVATOR LANDING REQUIREMENTS. ELEVATOR LANDINGS SHALL COMPLY WITH SECTION 11B-407.2.
11B-407.2.1 CALL CONTROLS. WHERE ELEVATOR CALL BUTTONS OR KEYPADS ARE PROVIDED, THEY SHALL COMPLY WITH SECTIONS 11B-407.2.1 AND 11B-309.4.
11B-407.2.1.1 HEIGHT. CALL BUTTONS AND KEYPADS SHALL BE LOCATED WITHIN ONE OF THE REACH RANGES SPECIFIED IN SECTION 11B-308, MEASURED TO THE CENTERLINE OF THE HIGHEST OPERABLE PART.

11B-407.2.1.2 SIZE AND SHAPE. CALL BUTTONS SHALL HAVE SQUARE SHOULDERS, BE 3/4 INCH (19.1 MM) MINIMUM IN THE SMALLEST DIMENSION AND SHALL BE RAISED 1/8 INCH (3.2 MM) PLUS OR MINUS 1/32 INCH (0.8 MM) ABOVE THE SURROUNDING SURFACE. THE BUTTONS SHALL BE ACTIVATED BY A MECHANICAL MOTION THAT IS DETECTABLE.
11B-407.2.1.3 CLEAR FLOOR OR GROUND SPACE. A CLEAR FLOOR OR GROUND SPACE COMPLYING WITH SECTION 11B-305 SHALL BE PROVIDED AT CALL CONTROLS.
11B-407.2.1.4 LOCATION. THE CALL BUTTON THAT DESIGNATES THE UP DIRECTION SHALL BE LOCATED ABOVE THE CALL BUTTON THAT DESIGNATES THE DOWN DIRECTION.
EXCEPTION: DESTINATION-ORIENTED ELEVATORS SHALL NOT BE REQUIRED TO COMPLY WITH SECTION 11B-407.2.1.4.
11B-407.2.1.5 SIGNALS. CALL BUTTONS SHALL HAVE VISIBLE SIGNALS THAT WILL ACTIVATE EACH CALL IS REGISTERED AND WILL EXTINGUISH WHEN EACH CALL IS ANSWERED. CALL BUTTONS SHALL BE INTERNALLY ILLUMINATED WITH A WHITE LIGHT OVER THE ENTIRE SURFACE OF THE BUTTON.
EXCEPTIONS:
1. DESTINATION-ORIENTED ELEVATORS SHALL NOT BE REQUIRED TO COMPLY WITH SECTION 11B-407.2.1.5 PROVIDED THAT VISIBLE AND AUDIBLE SIGNALS COMPLYING WITH SECTION 11B-407.2.2 INDICATING WHICH ELEVATOR CAR TO ENTER ARE PROVIDED.
11B-407.2.1.6 KEYPADS. WHERE KEYPADS ARE PROVIDED, KEYPADS SHALL BE IN A STANDARD TELEPHONE KEYPAD ARRANGEMENT AND SHALL COMPLY WITH SECTION 11B-407.4.7.2.
11B-407.2.2 HALL SIGNALS. HALL SIGNALS, INCLUDING IN-CAR SIGNALS, SHALL COMPLY WITH SECTION 11B-407.2.2.
11B-407.2.2.1 VISIBLE AND AUDIBLE SIGNALS. A VISIBLE AND AUDIBLE SIGNAL SHALL BE PROVIDED AT EACH HOISTWAY ENTRANCE TO INDICATE WHICH CAR IS ANSWERING A CALL AND THE CAR'S DIRECTION OF TRAVEL. WHERE IN-CAR SIGNALS ARE PROVIDED, THEY SHALL BE VISIBLE FROM THE FLOOR AREA ADJACENT TO THE HALL CALL BUTTONS.
EXCEPTIONS:
1. VISIBLE AND AUDIBLE SIGNALS SHALL NOT BE REQUIRED AT EACH DESTINATION-ORIENTED ELEVATOR WHERE A VISIBLE AND AUDIBLE SIGNAL COMPLYING WITH SECTION 11B-407.2.2 IS PROVIDED INDICATING THE ELEVATOR CAR DESIGNATION INFORMATION.
11B-407.2.2.2 VISIBLE SIGNALS. VISIBLE SIGNAL FIXTURES SHALL BE CENTERED AT 72 INCHES (1829 MM) MINIMUM ABOVE THE FINISH FLOOR OR GROUND. THE VISIBLE SIGNAL ELEMENTS SHALL BE A MINIMUM 2½ INCHES (64 MM) HIGH BY 2½ INCHES (64 MM) WIDE. SIGNALS SHALL BE VISIBLE FROM THE FLOOR AREA ADJACENT TO THE HALL CALL BUTTON.
EXCEPTIONS:
1. DESTINATION-ORIENTED ELEVATORS SHALL BE PERMITTED TO HAVE SIGNALS VISIBLE FROM THE FLOOR AREA ADJACENT TO THE HOISTWAY ENTRANCE.
11B-407.2.2.3 AUDIBLE SIGNALS. AUDIBLE SIGNALS SHALL SOUND ONCE FOR THE UP DIRECTION AND TWICE FOR THE DOWN DIRECTION, OR SHALL HAVE VERBAL ANNUNCIATORS THAT INDICATE THE DIRECTION OF ELEVATOR CAR TRAVEL. AUDIBLE SIGNALS SHALL HAVE A FREQUENCY OF 1500 HZ MAXIMUM. VERBAL ANNUNCIATORS SHALL HAVE A FREQUENCY OF 300 HZ MINIMUM AND 3000 HZ MAXIMUM. THE AUDIBLE SIGNAL AND VERBAL ANNUNCIATOR SHALL BE 10 DB MINIMUM ABOVE AMBIENT, BUT SHALL NOT EXCEED 80 DB, MEASURED AT THE HALL CALL BUTTON.
EXCEPTIONS:
1. DESTINATION-ORIENTED ELEVATORS SHALL NOT BE REQUIRED TO COMPLY WITH SECTION 11B-407.2.2.3 PROVIDED THAT THE AUDIBLE TONE AND VERBAL ANNOUNCEMENT IS THE SAME AS THOSE GIVEN AT THE CALL BUTTON OR CALL BUTTON KEYPAD.
11B-407.2.2.4 DIFFERENTIATION. EACH DESTINATION-ORIENTED ELEVATOR IN A BANK OF ELEVATORS SHALL HAVE AUDIBLE AND VISIBLE MEANS FOR DIFFERENTIATION.
11B-407.2.3 HOISTWAY SIGNS. SIGNS AT ELEVATOR HOISTWAYS SHALL COMPLY WITH SECTION 11B-407.2.3.
11B-407.2.3.1 FLOOR DESIGNATION. FLOOR DESIGNATIONS COMPLYING WITH SECTIONS 11B-703.2 AND 11B-703.4.1 SHALL BE PROVIDED ON BOTH JAMBS OF ELEVATOR HOISTWAY ENTRANCES. FLOOR DESIGNATIONS SHALL BE PROVIDED IN BOTH RAISED CHARACTERS AND BRAILLE. RAISED CHARACTERS SHALL BE 2 INCHES (51 MM) HIGH. A RAISED STAR, PLACED TO THE LEFT OF THE FLOOR DESIGNATION, SHALL BE PROVIDED ON BOTH JAMBS AT THE MAIN ENTRY LEVEL. THE OUTSIDE DIAMETER OF THE STAR SHALL BE 2 INCHES (51 MM) AND ALL POINTS SHALL BE OF EQUAL LENGTH. RAISED CHARACTERS, INCLUDING THE STAR, SHALL BE WHITE ON A BLACK BACKGROUND. BRAILLE COMPLYING WITH SECTION 11B-703.3 SHALL BE PLACED BELOW THE CORRESPONDING RAISED CHARACTERS AND THE STAR. THE BRAILLE TRANSLATION FOR THE STAR SHALL BE "MAIN". APPLIED PLATES ARE ACCEPTABLE IF THEY ARE PERMANENTLY FIXED TO THE JAMB.
11B-407.2.3.2 CAR DESIGNATIONS. DESTINATION-ORIENTED ELEVATORS SHALL PROVIDE TACTILE CAR IDENTIFICATION COMPLYING WITH SECTIONS 11B-703.2 AND 11B-703.4.1 ON BOTH JAMBS OF THE HOISTWAY IMMEDIATELY BELOW THE FLOOR DESIGNATION. CAR DESIGNATIONS SHALL BE PROVIDED IN BOTH RAISED CHARACTERS AND BRAILLE. RAISED CHARACTERS SHALL BE 2 INCHES (51 MM) HIGH. RAISED CHARACTERS SHALL BE WHITE ON A BLACK BACKGROUND. BRAILLE COMPLYING WITH SECTION 11B-703.3 SHALL BE PLACED BELOW THE CORRESPONDING RAISED CHARACTERS. APPLIED PLATES ARE ACCEPTABLE IF THEY ARE PERMANENTLY FIXED TO THE JAMB.
11B-407.3 ELEVATOR DOOR REQUIREMENTS. HOISTWAY AND CAR DOORS SHALL COMPLY WITH SECTION 11B-407.3.
11B-407.3.1 TYPE. ELEVATOR DOORS SHALL BE THE HORIZONTAL SLIDING TYPE. CAR GATES SHALL BE PROHIBITED.
11B-407.3.2 OPERATION. ELEVATOR HOISTWAY AND CAR DOORS SHALL OPEN AND CLOSE AUTOMATICALLY.
EXCEPTION: EXISTING MANUALLY OPERATED HOISTWAY SWING DOORS SHALL BE PERMITTED PROVIDED THAT THEY COMPLY WITH SECTIONS 11B-404.2.3 AND 11B-404.2.9. CAR DOOR CLOSING SHALL NOT BE INITIATED UNTIL THE HOISTWAY DOOR IS CLOSED.
11B-407.3.3 REOPENING DEVICE. ELEVATOR DOORS SHALL BE PROVIDED WITH A REOPENING DEVICE COMPLYING WITH SECTION 11B-407.3.3 THAT SHALL STOP AND REOPEN A CAR DOOR AND HOISTWAY DOOR AUTOMATICALLY IF THE DOOR BECOMES OBSTRUCTED BY AN OBJECT OR PERSON.
EXCEPTION: EXISTING ELEVATORS WITH MANUALLY OPERATED DOORS SHALL NOT BE REQUIRED TO COMPLY WITH SECTION 11B-407.3.3.
11B-407.3.3.1 HEIGHT. THE DEVICE SHALL BE ACTIVATED BY SENSING AN OBSTRUCTION PASSING THROUGH THE OPENING AT 5 INCHES (127 MM) NOMINAL AND 29 INCHES (737 MM) NOMINAL ABOVE THE FINISH FLOOR.
11B-407.3.3.2 CONTACT. THE DEVICE SHALL NOT REQUIRE PHYSICAL CONTACT TO BE ACTIVATED, ALTHOUGH CONTACT IS PERMITTED TO OCCUR BEFORE THE DOOR REVERSES.
11B-407.3.3.3 DURATION. DOOR REOPENING DEVICES SHALL REMAIN EFFECTIVE FOR 20 SECONDS MINIMUM.
11B-407.3.4 DOOR AND SIGNAL TIMING. THE MINIMUM ACCEPTABLE TIME FROM NOTIFICATION THAT A CAR IS ANSWERING A CALL OR NOTIFICATION OF THE CAR ASSIGNED AT THE MEANS FOR THE ENTRY OF DESTINATION INFORMATION UNTIL THE DOORS OF THAT CAR START TO CLOSE SHALL BE CALCULATED FROM THE FOLLOWING EQUATION:
T = D/(1.5 FT/S) OR T = D/(455 MM/S) = 5 SECONDS MINIMUM WHERE T EQUALS THE TOTAL TIME IN SECONDS AND D EQUALS THE DISTANCE (IN FEET OR MILLIMETERS) FROM THE POINT IN THE LOBBY OR CORRIDOR 60 INCHES (1524 MM) DIRECTLY IN FRONT OF THE FARTHEST CALL BUTTON CONTROLLING THAT CAR TO THE CENTERLINE OF ITS HOISTWAY DOOR.

DISABLED ACCESS NOTES (CONTINUED)

EXCEPTIONS:
1. FOR CARS WITH IN-CAR LANTERNS, T SHALL BE PERMITTED TO BEGIN WHEN THE SIGNAL IS VISIBLE FROM THE POINT 60 INCHES (1524 MM) DIRECTLY IN FRONT OF THE FARTHEST HALL CALL BUTTON AND THE AUDIBLE SIGNAL IS SOUNDED.
2. DESTINATION-ORIENTED ELEVATORS SHALL NOT BE REQUIRED TO COMPLY WITH SECTION 11B-407.3.4.
11B-407.3.5 DOOR DELAY. ELEVATOR DOORS SHALL REMAIN FULLY OPEN IN RESPONSE TO A CAR CALL FOR 5 SECONDS MINIMUM.
11B-407.3.6 WIDTH. THE WIDTH OF ELEVATOR DOORS SHALL COMPLY WITH TABLE 11B-407.4.1.
EXCEPTION: IN EXISTING ELEVATORS, A POWER-OPERATED CAR DOOR COMPLYING WITH SECTION 11B-404.2.3 SHALL BE PERMITTED.
11B-407.4 ELEVATOR CAR REQUIREMENTS. ELEVATOR CARS SHALL COMPLY WITH SECTION 11B-407.4.
11B-407.4.1 CAR DIMENSIONS. INSIDE DIMENSIONS OF ELEVATOR CARS AND CLEAR WIDTH OF ELEVATOR DOORS SHALL COMPLY WITH TABLE 11B-407.4.1.
EXCEPTION: IN EXISTING BUILDINGS, WHERE EXISTING SHAFT CONFIGURATION OR TECHNICAL INFEASIBILITY PROHIBITS STRICT COMPLIANCE WITH SECTION 11B-407.4.1, EXISTING ELEVATOR CAR CONFIGURATIONS THAT PROVIDE A CLEAR FLOOR AREA OF 18 SQUARE FEET (1.67 M²) MINIMUM AND ALSO PROVIDE AN INSIDE CLEAR DEPTH 54 INCHES (1372 MM) MINIMUM AND A CLEAR WIDTH 48 INCHES (1219 MM) MINIMUM SHALL BE PERMITTED.
11B-407.4.2 FLOOR SURFACES. FLOOR SURFACES IN ELEVATOR CARS SHALL COMPLY WITH SECTIONS 11B-302 AND 11B-303.
11B-407.4.3 PLATFORM TO HOISTWAY CLEARANCE. THE CLEARANCE BETWEEN THE CAR PLATFORM SILL AND THE EDGE OF ANY HOISTWAY LANDING SHALL BE 1¼ INCH (32 MM) MAXIMUM.
11B-407.4.4 LEVELING. EACH CAR SHALL BE EQUIPPED WITH A SELF-LEVELING FEATURE THAT WILL AUTOMATICALLY BRING AND MAINTAIN THE CAR AT FLOOR LANDINGS WITHIN A TOLERANCE OF ½ INCH (12.7 MM) UNDER RATED LOADING TO ZERO LOADING CONDITIONS.
11B-407.4.5 ILLUMINATION. THE LEVEL OF ILLUMINATION AT THE CAR CONTROLS, PLATFORM, CAR THRESHOLD AND CAR LANDING SILL SHALL BE 5 FOOT CANDLES (54 LUX) MINIMUM.
11B-407.4.6 ELEVATOR CAR CONTROLS. WHERE PROVIDED, ELEVATOR CAR CONTROLS SHALL COMPLY WITH SECTIONS 11B-407.4.6 AND 11B-309.4.
EXCEPTION: IN EXISTING ELEVATORS, WHERE A NEW CAR OPERATING PANEL COMPLYING WITH SECTION 11B-407.4.6 IS PROVIDED, EXISTING CAR OPERATING PANELS MAY REMAIN OPERATIONAL AND SHALL NOT BE REQUIRED TO COMPLY WITH SECTION 11B-407.4.6.
11B-407.4.6.1 LOCATION. CONTROLS SHALL BE LOCATED WITHIN ONE OF THE REACH RANGES SPECIFIED IN SECTION 11B-308.
EXCEPTIONS:
1. WHERE THE ELEVATOR PANEL SERVES MORE THAN 16 OPENINGS AND A PARALLEL APPROACH IS PROVIDED, BUTTONS WITH FLOOR DESIGNATIONS SHALL BE PERMITTED TO BE 54 INCHES (1372 MM) MAXIMUM ABOVE THE FINISH FLOOR.
2. IN EXISTING ELEVATORS, CAR CONTROL BUTTONS WITH FLOOR DESIGNATIONS SHALL BE PERMITTED TO BE LOCATED 54 INCHES (1372 MM) MAXIMUM ABOVE THE FINISH FLOOR WHERE A PARALLEL APPROACH IS PROVIDED.
11B-407.4.6.2 BUTTONS. CAR CONTROL BUTTONS WITH FLOOR DESIGNATIONS SHALL COMPLY WITH SECTION 11B-407.4.6.2.
11B-407.4.6.2.1 SIZE AND SHAPE. BUTTONS SHALL HAVE SQUARE SHOULDERS, BE 3/4 INCH (19.1 MM) MINIMUM IN THEIR SMALLEST DIMENSION AND BE RAISED 1/8 INCH (3.2 MM) PLUS OR MINUS 1/32 INCH (0.8 MM) ABOVE THE SURROUNDING SURFACE.
11B-407.4.6.2.2 ARRANGEMENT. BUTTONS SHALL BE ARRANGED WITH NUMBERS IN ASCENDING ORDER. WHEN TWO OR MORE COLUMNS OF BUTTONS ARE PROVIDED THEY SHALL READ FROM LEFT TO RIGHT.
11B-407.4.6.2.3 ILLUMINATION. CAR CONTROL BUTTONS SHALL BE ILLUMINATED.
11B-407.4.6.2.4 OPERATION. CAR CONTROL BUTTONS SHALL BE ACTIVATED BY A MECHANICAL MOTION THAT IS DETECTABLE.
11B-407.4.6.3 KEYPADS. CAR CONTROL KEYPADS SHALL BE IN A STANDARD TELEPHONE KEYPAD ARRANGEMENT AND SHALL COMPLY WITH SECTION 11B-407.4.7.2.
11B-407.4.6.4 EMERGENCY CONTROLS. EMERGENCY CONTROLS SHALL COMPLY WITH SECTION 11B-407.4.6.4.
11B-407.4.6.4.1 HEIGHT. EMERGENCY CONTROL BUTTONS SHALL HAVE THEIR CENTERLINES 35 INCHES (889 MM) MINIMUM ABOVE THE FINISH FLOOR.
11B-407.4.6.4.2 LOCATION. EMERGENCY CONTROLS, INCLUDING THE EMERGENCY ALARM, SHALL BE GROUPED AT THE BOTTOM OF THE PANEL.
11B-407.4.7 DESIGNATIONS AND INDICATORS OF CAR CONTROLS. DESIGNATIONS AND INDICATORS OF CAR CONTROLS SHALL COMPLY WITH SECTION 11B-407.4.7.
EXCEPTION: IN EXISTING ELEVATORS, WHERE A NEW CAR OPERATING PANEL COMPLYING WITH SECTION 11B-407.4.7 IS PROVIDED, EXISTING CAR OPERATING PANELS MAY REMAIN OPERATIONAL AND SHALL NOT BE REQUIRED TO COMPLY WITH SECTION 11B-407.4.7.
11B-407.4.7.1 BUTTONS. CAR CONTROL BUTTONS SHALL COMPLY WITH SECTION 11B-407.4.7.1.
11B-407.4.7.1.1 TYPE. CONTROL BUTTONS SHALL BE IDENTIFIED BY RAISED CHARACTERS OR SYMBOLS, WHITE ON A BLACK BACKGROUND, COMPLYING WITH SECTION 11B-703.2 AND BRAILLE COMPLYING WITH SECTION 11B-703.3.
11B-407.4.7.1.2 LOCATION. RAISED CHARACTERS OR SYMBOLS AND BRAILLE DESIGNATIONS SHALL BE PLACED IMMEDIATELY TO THE LEFT OF THE CONTROL BUTTON TO WHICH THE DESIGNATIONS APPLY.
11B-407.4.7.1.3 SYMBOLS. THE CONTROL BUTTON FOR THE EMERGENCY STOP, ALARM, DOOR OPEN, DOOR CLOSE, MAIN ENTRY FLOOR, AND PHONE, SHALL BE IDENTIFIED WITH RAISED SYMBOLS AND BRAILLE AS SHOWN IN TABLE 11B-407.4.7.1.3.
11B-407.4.7.1.4 VISIBLE INDICATORS. BUTTONS WITH FLOOR DESIGNATIONS SHALL BE PROVIDED WITH VISIBLE INDICATORS TO SHOW THAT A CALL HAS BEEN REGISTERED. THE VISIBLE INDICATION SHALL EXTINGUISH WHEN THE CAR ARRIVES AT THE DESIGNATED FLOOR.
11B-407.4.7.1.5 BUTTON SPACING. A MINIMUM CLEAR SPACE OF 3/8 INCH (9.5 MM) OR OTHER SUITABLE MEANS OF SEPARATION SHALL BE PROVIDED BETWEEN ROWS OF CONTROL BUTTONS.
11B-407.4.7.2 KEYPADS. KEYPADS SHALL BE IDENTIFIED BY CHARACTERS COMPLYING WITH SECTION 11B-703.5 AND SHALL BE CENTERED ON THE CORRESPONDING KEYPAD BUTTON. THE NUMBER FIVE KEY SHALL HAVE A SINGLE RAISED DOT. THE DOT SHALL BE 0.118 INCH (3 MM) TO 0.120 INCH (3.05 MM) BASE DIAMETER AND IN OTHER ASPECTS COMPLY WITH TABLE 11B-703.3.1.
11B-407.4.8 CAR POSITION INDICATORS. AUDIBLE AND VISIBLE CAR POSITION INDICATORS SHALL BE PROVIDED IN ELEVATOR CARS.
11B-407.4.8.1 VISIBLE INDICATORS. VISIBLE INDICATORS SHALL COMPLY WITH SECTION 11B-407.4.8.1.
11B-407.4.8.1.1 SIZE. CHARACTERS SHALL BE ½ INCH (12.7 MM) HIGH MINIMUM.
11B-407.4.8.1.2 LOCATION. INDICATORS SHALL BE LOCATED ABOVE THE CAR CONTROL PANEL OR ABOVE THE DOOR.
11B-407.4.8.1.3 FLOOR ARRIVAL. AS THE CAR PASSES A FLOOR AND WHEN A CAR STOPS AT A FLOOR SERVED BY THE ELEVATOR, THE CORRESPONDING CHARACTER SHALL ILLUMINATE.
EXCEPTION: DESTINATION-ORIENTED ELEVATORS SHALL NOT BE REQUIRED TO COMPLY WITH SECTION 11B-407.4.8.1.3 PROVIDED THAT THE VISIBLE INDICATORS EXTINGUISH WHEN THE CALL HAS BEEN ANSWERED.
11B-407.4.8.1.4 DESTINATION INDICATOR. IN DESTINATION-ORIENTED ELEVATORS, A DISPLAY SHALL BE PROVIDED IN THE CAR WITH VISIBLE INDICATORS TO SHOW CAR DESTINATIONS.
11B-407.4.8.2 AUDIBLE INDICATORS. AUDIBLE INDICATORS SHALL COMPLY WITH SECTION 11B-407.4.8.2.
11B-407.4.8.2.1 SIGNAL TYPE. THE SIGNAL SHALL BE AN AUTOMATIC VERBAL ENUNCIATOR WHICH ANNOUNCES THE FLOOR AT WHICH THE CAR IS ABOUT TO STOP.
EXCEPTION: FOR ELEVATORS OTHER THAN DESTINATION-ORIENTED ELEVATORS THAT HAVE A RATED SPEED OF 200 FEET PER MINUTE (1 M/S) OR LESS, A NON-VERBAL AUDIBLE SIGNAL WITH A FREQUENCY OF 1500 HZ MAXIMUM WHICH SOUNDS AS THE CAR PASSES OR IS ABOUT TO STOP AT A FLOOR SERVED BY THE ELEVATOR SHALL BE PERMITTED.
11B-407.4.8.2.2 SIGNAL LEVEL. THE VERBAL ENUNCIATOR SHALL BE 10 DB MINIMUM ABOVE AMBIENT, BUT SHALL NOT EXCEED 80 DB, MEASURED AT THE ANNUNCIATE.
11B-407.4.8.2.3 FREQUENCY. THE VERBAL ENUNCIATOR SHALL HAVE A FREQUENCY OF 300 HZ MINIMUM TO 3000 HZ MAXIMUM.
11B-407.4.9 EMERGENCY COMMUNICATION. EMERGENCY TWO-WAY COMMUNICATION SYSTEMS SHALL COMPLY WITH SECTION 11B-308. RAISED SYMBOLS OR CHARACTERS, WHITE ON A BLACK BACKGROUND, AND BRAILLE SHALL BE PROVIDED ADJACENT TO THE DEVICE AND SHALL COMPLY WITH SECTIONS 11B-703.2 AND 11B-703.3. EMERGENCY TWO-WAY COMMUNICATION SYSTEMS BETWEEN THE ELEVATOR AND A POINT OUTSIDE THE HOISTWAY SHALL COMPLY WITH ASME A17.1.
11B-407.4.10 SUPPORT RAIL. SUPPORT RAILS SHALL BE PROVIDED ON AT LEAST ONE WALL OF THE CAR.
11B-407.4.10.1 LOCATION. CLEARANCE BETWEEN SUPPORT RAILS AND ADJACENT SURFACES SHALL BE 1½ INCHES (38 MM) MINIMUM. TOP OF SUPPORT RAILS SHALL BE 31 INCHES (787 MM) MINIMUM TO 33 INCHES (838 MM) MAXIMUM ABOVE THE FLOOR OF THE CAR. THE ENDS OF THE SUPPORT RAIL SHALL BE 6 INCHES (152 MM) MAXIMUM FROM ADJACENT WALLS.
11B-407.4.10.2 SURFACES. SUPPORT RAILS SHALL BE SMOOTH AND ANY SURFACE ADJACENT TO THEM SHALL BE FREE OF SHARP OR ABRASIVE ELEMENTS.
11B-407.4.10.3 STRUCTURAL STRENGTH. ALLOWABLE STRESSES SHALL NOT BE EXCEEDED FOR MATERIALS USED WHEN A VERTICAL OR HORIZONTAL FORCE OF 250 POUNDS (1112 N) IS APPLIED AT ANY POINT ON THE SUPPORT RAIL, FASTENER, MOUNTING DEVICE, OR SUPPORTING STRUCTURE.
11B-408 LIMITED-USE/LIMITED-APPLICATION ELEVATORS
11B-408.1 GENERAL. LIMITED-USE/LIMITED-APPLICATION ELEVATORS SHALL COMPLY WITH SECTION 11B-408 AND WITH ASME A17.1. THEY SHALL BE PASSENGER ELEVATORS AS CLASSIFIED BY ASME A17.1. ELEVATOR OPERATION SHALL BE AUTOMATIC.
11B-408.2 ELEVATOR LANDINGS. LANDINGS SERVING LIMITED-USE/LIMITED-APPLICATION ELEVATORS SHALL COMPLY WITH SECTION 11B-408.2.

11B-408.2.1 CALL BUTTONS. ELEVATOR CALL BUTTONS AND KEYPADS SHALL COMPLY WITH SECTION 11B-407.2.1.
11B-408.2.2 HALL SIGNALS. HALL SIGNALS SHALL COMPLY WITH SECTION 11B-407.2.2.
11B-408.2.3 HOISTWAY SIGNS. SIGNS AT ELEVATOR HOISTWAYS SHALL COMPLY WITH SECTION 11B-407.2.3.1.
11B-408.3 ELEVATOR DOORS. ELEVATOR HOISTWAY DOORS SHALL COMPLY WITH SECTION 11B-408.3.
11B-408.3.1 SLIDING DOORS. SLIDING HOISTWAY AND CAR DOORS SHALL COMPLY WITH SECTIONS 11B-407.3.1 THROUGH 11B-407.3.3 AND 11B-408.4.1.
11B-408.3.2 SWINGING DOORS. SWINGING HOISTWAY DOORS SHALL OPEN AND CLOSE AUTOMATICALLY AND SHALL COMPLY WITH SECTIONS 11B-404, 11B-407.3.2 AND 11B-408.3.2.
11B-408.3.2.1 POWER OPERATION. SWINGING DOORS SHALL BE POWER-OPERATED AND SHALL COMPLY WITH ANSI/BHMA A156.19.
11B-408.3.2.2 DURATION. POWER-OPERATED SWINGING DOORS SHALL REMAIN OPEN FOR 20 SECONDS MINIMUM WHEN ACTIVATED.

11B-408.4 ELEVATOR CARS. ELEVATOR CARS SHALL COMPLY WITH SECTION 11B-408.4.
11B-408.4.1 CAR DIMENSIONS AND DOORS. ELEVATOR CARS SHALL PROVIDE A CLEAR WIDTH 42 INCHES (1067 MM) MINIMUM AND A CLEAR DEPTH 54 INCHES (1372 MM) MINIMUM. CAR DOORS SHALL BE POSITIONED AT THE NARROW ENDS OF CARS AND SHALL PROVIDE 32 INCHES (813 MM) MINIMUM CLEAR WIDTH.
EXCEPTIONS:
1. CARS THAT PROVIDE A CLEAR WIDTH 51 INCHES (1295 MM) MINIMUM SHALL BE PERMITTED TO PROVIDE A CLEAR DEPTH 51 INCHES (1295 MM) MINIMUM PROVIDED THAT CAR DOORS PROVIDE A CLEAR OPENING 36 INCHES (914 MM) WIDE MINIMUM.
11B-408.4.2 FLOOR SURFACES. FLOOR SURFACES IN ELEVATOR CARS SHALL COMPLY WITH SECTIONS 11B-302 AND 11B-303.

DISABLED ACCESS NOTES (CONTINUED)

11B-408.4.3 PLATFORM TO HOISTWAY CLEARANCE. THE PLATFORM TO HOISTWAY CLEARANCE SHALL COMPLY WITH SECTION 11B-407.4.3.
11B-408.4.4 LEVELING. ELEVATOR CAR LEVELING SHALL COMPLY WITH SECTION 11B-407.4.4.
11B-408.4.5 ILLUMINATION. ELEVATOR CAR ILLUMINATION SHALL COMPLY WITH SECTION 11B-407.4.5.
11B-408.4.6 CAR CONTROLS. ELEVATOR CAR CONTROLS SHALL COMPLY WITH SECTION 11B-407.4.6. CONTROL PANELS SHALL BE CENTERED ON A SIDE WALL.
11B-408.4.7 DESIGNATIONS AND INDICATORS OF CAR CONTROLS. DESIGNATIONS AND INDICATORS OF CAR CONTROLS SHALL COMPLY WITH SECTION 11B-407.4.7.
11B-408.4.8 EMERGENCY COMMUNICATIONS. CAR EMERGENCY SIGNALING DEVICES COMPLYING WITH SECTION 11B-407.4.9 SHALL BE PROVIDED.
11B-409 PRIVATE RESIDENCE ELEVATORS
11B-409.1 GENERAL. PRIVATE RESIDENCE ELEVATORS THAT ARE PROVIDED WITHIN A RESIDENTIAL DWELLING UNIT REQUIRED TO PROVIDE MOBILITY FEATURES COMPLYING WITH SECTIONS 11B-809.2 THROUGH 11B-809.4 SHALL COMPLY WITH SECTION 11B-409 AND WITH ASME A17.1. THEY SHALL BE PASSENGER ELEVATORS AS CLASSIFIED BY ASME A17.1. ELEVATOR OPERATION SHALL BE AUTOMATIC.
11B-409.2 CALL BUTTONS. CALL BUTTONS SHALL BE ¾ INCH (19.1 MM) MINIMUM IN THE SMALLEST DIMENSION AND SHALL COMPLY WITH SECTION 11B-309.
11B-409.3 ELEVATOR DOORS. HOISTWAY DOORS, CAR DOORS, AND CAR GATES SHALL COMPLY WITH SECTIONS 11B-409.3 AND 11B-404.
EXCEPTION: DOORS SHALL NOT BE REQUIRED TO COMPLY WITH THE MANEUVERING CLEARANCE REQUIREMENTS IN SECTION 11B-404.2.4.1 FOR APPROACHES TO THE PUSH SIDE OF SWINGING DOORS.
11B-409.3.1 POWER OPERATION. ELEVATOR CAR AND HOISTWAY DOORS AND GATES SHALL BE POWER OPERATED AND SHALL COMPLY WITH ANSI/BHMA A156.19. POWER OPERATED DOORS AND GATES SHALL REMAIN OPEN FOR 20 SECONDS MINIMUM WHEN ACTIVATED.
EXCEPTION: IN ELEVATOR CARS WITH MORE THAN ONE OPENING, HOISTWAY DOORS AND GATES SHALL BE PERMITTED TO BE OF THE MANUAL-OPEN, SELF-CLOSE TYPE.
11B-409.3.2 LOCATION. ELEVATOR CAR DOORS OR GATES SHALL BE POSITIONED AT THE NARROW END OF THE CLEAR FLOOR SPACES REQUIRED BY SECTION 11B-409.4.1.
11B-409.4 ELEVATOR CARS. PRIVATE RESIDENCE ELEVATOR CARS SHALL COMPLY WITH SECTION 11B-409.4.
11B-409.4.1 INSIDE DIMENSIONS OF ELEVATOR CARS. ELEVATOR CARS SHALL PROVIDE A CLEAR FLOOR SPACE OF 36 INCHES (914 MM) MINIMUM BY 48 INCHES (1219 MM) MINIMUM AND SHALL COMPLY WITH SECTION 11B-305.
11B-409.4.2 FLOOR SURFACES. FLOOR SURFACES IN ELEVATOR CARS SHALL COMPLY WITH SECTIONS 11B-302 AND 11B-303.
11B-409.4.3 PLATFORM TO HOISTWAY CLEARANCE. THE CLEARANCE BETWEEN THE CAR PLATFORM AND THE EDGE OF ANY LANDING SILL SHALL BE 1½ INCH (38 MM) MAXIMUM.
11B-409.4.4 LEVELING. EACH CAR SHALL AUTOMATICALLY STOP AT A FLOOR LANDING WITHIN A TOLERANCE OF ½ INCH (12.7 MM) UNDER RATED LOADING TO ZERO LOADING CONDITIONS.
11B-409.4.5 ILLUMINATION LEVELS. ELEVATOR CAR ILLUMINATION SHALL COMPLY WITH SECTION 11B-407.4.5.
11B-409.4.6 CAR CONTROLS. ELEVATOR CAR CONTROL BUTTONS SHALL COMPLY WITH SECTIONS 11B-409.4.6, 11B-309.3, 11B-309.4, AND SHALL BE RAISED OR FLUSH.
11B-409.4.6.1 SIZE. CONTROL BUTTONS SHALL BE 3/4 INCH (19.1 MM) MINIMUM IN THEIR SMALLEST DIMENSION.
11B-409.4.6.2 LOCATION. CONTROL PANELS SHALL BE ON A SIDE WALL, 12 INCHES (305 MM) MINIMUM FROM ANY ADJACENT WALL.
11B-409.4.7 EMERGENCY COMMUNICATIONS. EMERGENCY TWO-WAY COMMUNICATION SYSTEMS SHALL COMPLY WITH SECTION 11B-409.4.7.
11B-409.4.7.1 TYPE. A TELEPHONE AND EMERGENCY SIGNAL DEVICE SHALL BE PROVIDED IN THE CAR.
11B-409.4.7.2 OPERABLE PARTS. THE TELEPHONE AND EMERGENCY SIGNALING DEVICE SHALL COMPLY WITH SECTIONS 11B-309.3 AND 11B-309.4.
11B-409.4.7.3 COMPARTMENT. IF THE TELEPHONE OR DEVICE IS IN A CLOSED COMPARTMENT, THE COMPARTMENT DOOR HARDWARE SHALL COMPLY WITH SECTION 11B-309.
11B-409.4.7.4 CORD. THE TELEPHONE CORD SHALL BE 29 INCHES (737 MM) LONG MINIMUM.

5 HANDICAPPED ELEVATOR REQUIREMENTS

SCALE: 1/2" = 1'-0"

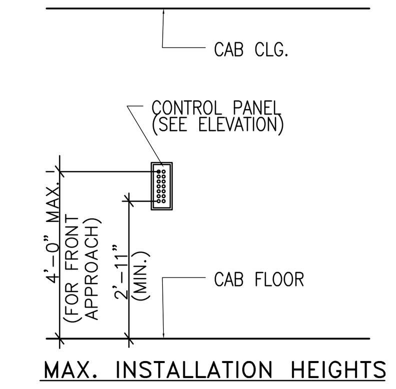

MAX. INSTALLATION HEIGHTS

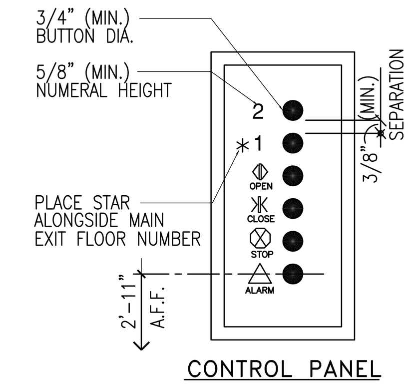

CONTROL PANEL

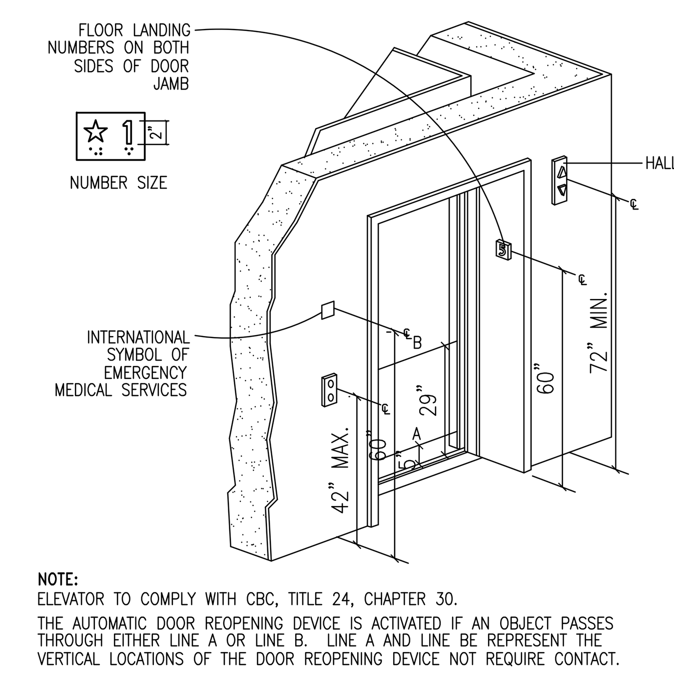

NOTE:
ELEVATOR TO COMPLY WITH CBC, TITLE 24, CHAPTER 30.
THE AUTOMATIC DOOR REOPENING DEVICE IS ACTIVATED IF AN OBJECT PASSES THROUGH EITHER LINE A OR LINE B. LINE A AND LINE B REPRESENT THE VERTICAL LOCATIONS OF THE DOOR REOPENING DEVICE NOT REQUIRE CONTACT.

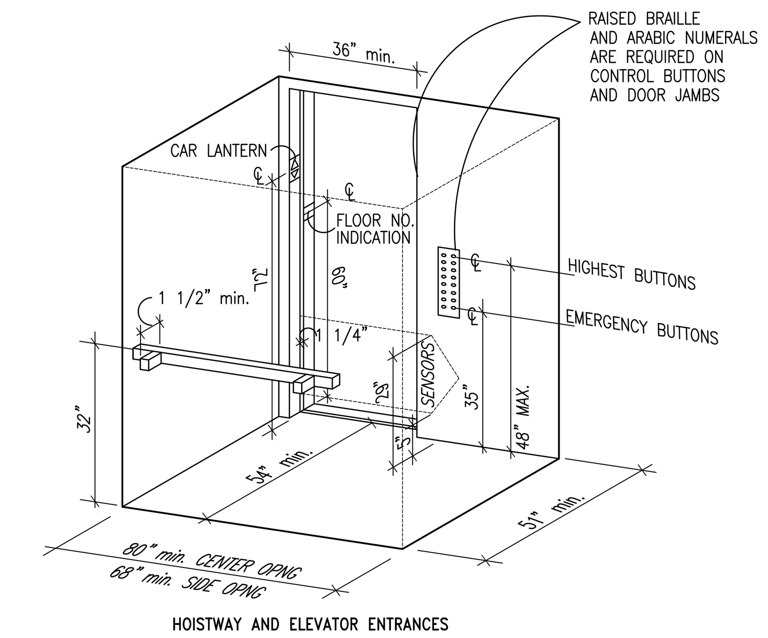

HOISTWAY AND ELEVATOR ENTRANCES

6 ELEVATOR PLAN

SCALE: NONE

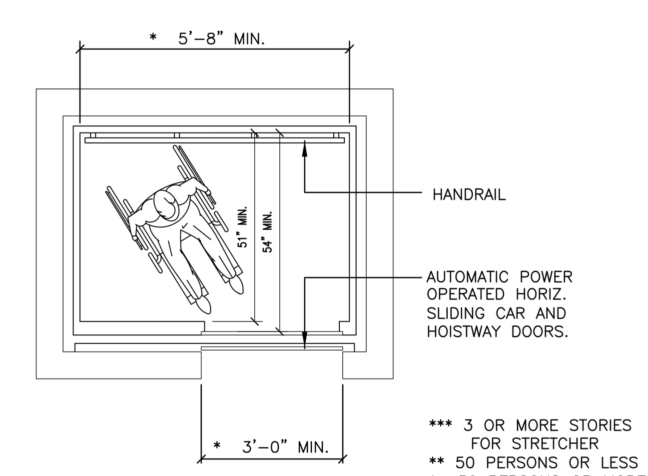

*** 3 OR MORE STORIES FOR STRETCHER
** 50 PERSONS OR LESS
* 50 PERSONS OR MORE

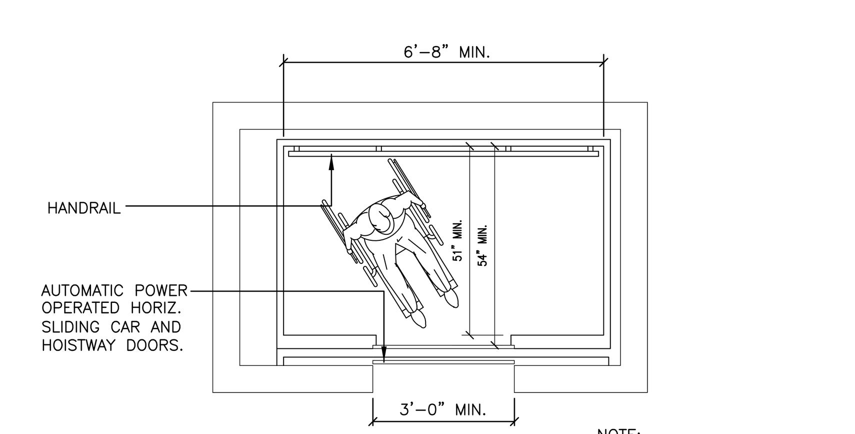

NOTE:
ELEVATORS SHALL BE AUTOMATIC SELF-LEVELNG WITHIN 1/2" MAX TOLERENCE.

7 NEW ELEVATOR-CONC. PIT TOP VIEW

SCALE: 1/2" = 1'-0"

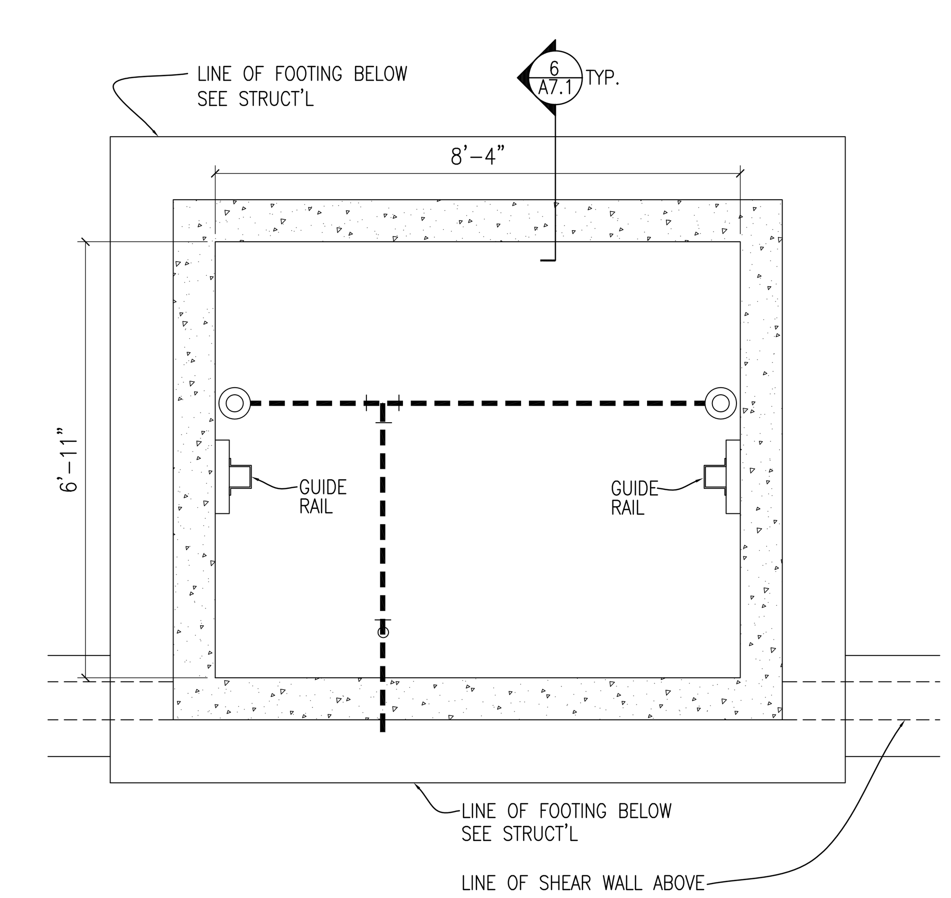

NOTE: A. ALL ELEVATOR PITS SHALL BE EQUIPPED WITH A DRAIN TO PREVENT THE ACCUMULATION OF WATER. THE WATER AND OTHER LIQUIDS COLLECTED IN THE BOTTOM OF AN ELEVATOR SHAFT MAY NOT BE DISCHARGED TO THE SANITARY SEWER OR STORM DRAIN. PLUMBING INFORMATION BULLETIN, P/PC 2001-04.

FRANCO ARCHITECTS INC.
12345 Ventura Blvd. H
Studio City, CA 91604
Tel 818 754-2030
Fax 818 754-2032
Architecture and Planning

MAGNOLIA SCIENCE ACADEMY
18220 SHERMAN WAY, RESEDA, CA91335

REV	DESCRIPTION	DATE
	PLAN CHECK #1	6/14/2017

LICENSED ARCHITECT JOHANN D. WANG C27010 4/30/2019 RENEWAL DATE STATE OF CALIFORNIA

PROJECT: MAGNOLIA SCIENCE ACADEMY
PROJECT ADDRESS: 18220 SHERMAN WAY, RESEDA, CA91335
DRAWING TITLE: NOTE AND HC REQUIREMENTS
DRAWN BY:
ISSUE DATE: 6/14/2017
JOB NUMBER:
DRAWING SCALE: AS NOTED
APPROVED BY:
DRAWING NUMBER: A7.2

11B-603 TOILET AND BATHING ROOMS

11B-603.1 GENERAL. TOILET AND BATHING ROOMS SHALL COMPLY WITH 11B-603.
11B-603.2 CLEARANCES. CLEARANCES SHALL COMPLY WITH 11B-603.2.

11B-603.2.1 TURNING SPACE. TURNING SPACE COMPLYING WITH 11B-304 SHALL BE PROVIDED WITHIN THE ROOM.

11B-603.2.2 OVERLAP. REQUIRED CLEAR FLOOR SPACES, CLEARANCE AT FIXTURES, AND TURNING SPACE SHALL BE PERMITTED TO OVERLAP.

11B-603.2.3 DOOR SWING. DOORS SHALL NOT SWING INTO THE CLEAR FLOOR SPACE OR CLEARANCE REQUIRED FOR ANY FIXTURE. OTHER THAN THE DOOR TO THE ACCESSIBLE WATER CLOSET COMPARTMENT, A DOOR, IN ANY POSITION, MAY ENCROACH INTO THE TURNING SPACE BY 12 INCHES (305 MM) MAXIMUM.

EXCEPTION:
WHERE THE TOILET ROOM OR BATHING ROOM IS FOR INDIVIDUAL USE AND A CLEAR FLOOR SPACE COMPLYING WITH 11B-305.3 IS PROVIDED WITHIN THE ROOM BEYOND THE ARC OF THE DOOR SWING, DOORS SHALL BE PERMITTED TO SWING INTO THE CLEAR FLOOR SPACE OR CLEARANCE REQUIRED FOR ANY FIXTURE.

11B-603.3 MIRRORS. MIRRORS LOCATED ABOVE LAVATORIES OR COUNTERTOPS SHALL BE INSTALLED WITH THE BOTTOM EDGE OF THE REFLECTING SURFACE 40 INCHES (1016 MM) MAXIMUM ABOVE THE FINISH FLOOR OR GROUND. MIRRORS NOT LOCATED ABOVE LAVATORIES OR COUNTERTOPS SHALL BE INSTALLED WITH THE BOTTOM EDGE OF THE REFLECTING SURFACE 35 INCHES (889 MM) MAXIMUM ABOVE THE FINISH FLOOR OR GROUND.

11B-603.4 COAT HOOKS AND SHELVES. COAT HOOKS SHALL BE LOCATED WITHIN ONE OF THE REACH RANGES SPECIFIED IN 11B-308. SHELVES SHALL BE LOCATED 40 INCHES (1016 MM) MINIMUM AND 48 INCHES (1219 MM) MAXIMUM ABOVE THE FINISH FLOOR. MEDICINE CABINETS SHALL BE LOCATED WITH A USABLE SHELF NO HIGHER THAN 44 INCHES (1118 MM) MAXIMUM ABOVE THE FINISH FLOOR.

11B-603.5 ACCESSORIES. WHERE TOWEL, SANITARY NAPKIN, WASTE RECEPTACLES, AND DISPENSERS ARE PROVIDED IN TOILET FACILITIES, AT LEAST ONE OF EACH TYPE SHALL BE LOCATED ON AN ACCESSIBLE ROUTE. ALL OPERABLE PARTS, INCLUDING COIN SLOTS, SHALL BE 40 INCHES (1016 MM) MAXIMUM ABOVE THE FINISHED FLOOR.

11B-604 WATER CLOSETS AND TOILET COMPARTMENTS

11B-604.1 GENERAL. WATER CLOSETS AND TOILET COMPARTMENTS SHALL COMPLY WITH 11B-604.2 THROUGH 11B-604.8.

EXCEPTION: WATER CLOSETS AND TOILET COMPARTMENTS FOR CHILDREN'S USE SHALL BE PERMITTED TO COMPLY WITH 11B-604.9.

11B-604.2 LOCATION. THE WATER CLOSET SHALL BE POSITIONED WITH A WALL OR PARTITION TO THE REAR AND TO ONE SIDE. THE CENTERLINE OF THE WATER CLOSET SHALL BE 17 INCHES (432 MM) MINIMUM TO 18 INCHES (457 MM) MAXIMUM FROM THE SIDE WALL OR PARTITION, EXCEPT THAT THE WATER CLOSET SHALL BE 17 INCHES (432 MM) MINIMUM AND 19 INCHES (483 MM) MAXIMUM FROM THE SIDE WALL OR PARTITION IN THE AMBULATORY ACCESSIBLE TOILET COMPARTMENT SPECIFIED IN 11B-604.8.2. WATER CLOSETS SHALL BE ARRANGED FOR A LEFT-HAND OR RIGHT-HAND APPROACH.

11B-604.3 CLEARANCE. CLEARANCES AROUND WATER CLOSETS AND IN TOILET COMPARTMENTS SHALL COMPLY WITH 11B-604.3.

11B-604.3.1 SIZE.CLEARANCE AROUND A WATER CLOSET SHALL BE 60 INCHES (1524 MM) MINIMUM MEASURED PERPENDICULAR FROM THE SIDE WALL AND 56 INCHES (1422 MM) MINIMUM MEASURED PERPENDICULAR FROM THE REAR WALL. A MINIMUM 60 INCHES (1524 MM) WIDE AND 48 INCHES (1219 MM) DEEP MANEUVERING SPACE SHALL BE PROVIDED IN FRONT OF THE WATER CLOSET.

11B-604.3.2 OVERLAP. THE REQUIRED CLEARANCE AROUND THE WATER CLOSET SHALL BE PERMITTED TO OVERLAP THE WATER CLOSET, ASSOCIATED GRAB BARS, DISPENSERS, SANITARY NAPKIN DISPOSAL UNITS, COAT HOOKS, SHELVES, ACCESSIBLE ROUTES, CLEAR FLOOR SPACE AND CLEARANCES REQUIRED AT OTHER FIXTURES, AND THE TURNING SPACE. NO OTHER FIXTURES OR OBSTRUCTIONS SHALL BE LOCATED WITHIN THE REQUIRED WATER CLOSET CLEARANCE.

EXCEPTION: IN RESIDENTIAL DWELLING UNITS, A LAVATORY COMPLYING WITH 11B-606 SHALL BE PERMITTED ON THE REAR WALL 18 INCHES (457 MM) MINIMUM FROM THE WATER CLOSET CENTERLINE WHERE THE CLEARANCE AT THE WATER CLOSET IS 66 INCHES (1676 MM) MINIMUM MEASURED PERPENDICULAR FROM THE REAR WALL.

11B-603 TOILET AND BATHING ROOMS

11B-603.1 GENERAL. TOILET AND BATHING ROOMS SHALL COMPLY WITH 11B-603.
11B-603.2 CLEARANCES. CLEARANCES SHALL COMPLY WITH 11B-603.2.

11B-603.2.1 TURNING SPACE. TURNING SPACE COMPLYING WITH 11B-304 SHALL BE PROVIDED WITHIN THE ROOM.

11B-603.2.2 OVERLAP. REQUIRED CLEAR FLOOR SPACES, CLEARANCE AT FIXTURES, AND TURNING SPACE SHALL BE PERMITTED TO OVERLAP.

11B-603.2.3 DOOR SWING. DOORS SHALL NOT SWING INTO THE CLEAR FLOOR SPACE OR CLEARANCE REQUIRED FOR ANY FIXTURE. OTHER THAN THE DOOR TO THE ACCESSIBLE WATER CLOSET COMPARTMENT, A DOOR, IN ANY POSITION, MAY ENCROACH INTO THE TURNING SPACE BY 12 INCHES (305 MM) MAXIMUM.

EXCEPTION:
WHERE THE TOILET ROOM OR BATHING ROOM IS FOR INDIVIDUAL USE AND A CLEAR FLOOR SPACE COMPLYING WITH 11B-305.3 IS PROVIDED WITHIN THE ROOM BEYOND THE ARC OF THE DOOR SWING, DOORS SHALL BE PERMITTED TO SWING INTO THE CLEAR FLOOR SPACE OR CLEARANCE REQUIRED FOR ANY FIXTURE.

11B-603.3 MIRRORS. MIRRORS LOCATED ABOVE LAVATORIES OR COUNTERTOPS SHALL BE INSTALLED WITH THE BOTTOM EDGE OF THE REFLECTING SURFACE 40 INCHES (1016 MM) MAXIMUM ABOVE THE FINISH FLOOR OR GROUND. MIRRORS NOT LOCATED ABOVE LAVATORIES OR COUNTERTOPS SHALL BE INSTALLED WITH THE BOTTOM EDGE OF THE REFLECTING SURFACE 35 INCHES (889 MM) MAXIMUM ABOVE THE FINISH FLOOR OR GROUND.

11B-603.4 COAT HOOKS AND SHELVES. COAT HOOKS SHALL BE LOCATED WITHIN ONE OF THE REACH RANGES SPECIFIED IN 11B-308. SHELVES SHALL BE LOCATED 40 INCHES (1016 MM) MINIMUM AND 48 INCHES (1219 MM) MAXIMUM ABOVE THE FINISH FLOOR. MEDICINE CABINETS SHALL BE LOCATED WITH A USABLE SHELF NO HIGHER THAN 44 INCHES (1118 MM) MAXIMUM ABOVE THE FINISH FLOOR.

11B-603.5 ACCESSORIES. WHERE TOWEL, SANITARY NAPKIN, WASTE RECEPTACLES, AND DISPENSERS ARE PROVIDED IN TOILET FACILITIES, AT LEAST ONE OF EACH TYPE SHALL BE LOCATED ON AN ACCESSIBLE ROUTE. ALL OPERABLE PARTS, INCLUDING COIN SLOTS, SHALL BE 40 INCHES (1016 MM) MAXIMUM ABOVE THE FINISHED FLOOR.

11B-604 WATER CLOSETS AND TOILET COMPARTMENTS

11B-604.1 GENERAL. WATER CLOSETS AND TOILET COMPARTMENTS SHALL COMPLY WITH 11B-604.2 THROUGH 11B-604.8.

EXCEPTION: WATER CLOSETS AND TOILET COMPARTMENTS FOR CHILDREN'S USE SHALL BE PERMITTED TO COMPLY WITH 11B-604.9.

11B-604.2 LOCATION. THE WATER CLOSET SHALL BE POSITIONED WITH A WALL OR PARTITION TO THE REAR AND TO ONE SIDE. THE CENTERLINE OF THE WATER CLOSET SHALL BE 17 INCHES (432 MM) MINIMUM TO 18 INCHES (457 MM) MAXIMUM FROM THE SIDE WALL OR PARTITION, EXCEPT THAT THE WATER CLOSET SHALL BE 17 INCHES (432 MM) MINIMUM AND 19 INCHES (483 MM) MAXIMUM FROM THE SIDE WALL OR PARTITION IN THE AMBULATORY ACCESSIBLE TOILET COMPARTMENT SPECIFIED IN 11B-604.8.2. WATER CLOSETS SHALL BE ARRANGED FOR A LEFT-HAND OR RIGHT-HAND APPROACH.

11B-604.3 CLEARANCE. CLEARANCES AROUND WATER CLOSETS AND IN TOILET COMPARTMENTS SHALL COMPLY WITH 11B-604.3.

11B-604.3.1 SIZE.CLEARANCE AROUND A WATER CLOSET SHALL BE 60 INCHES (1524 MM) MINIMUM MEASURED PERPENDICULAR FROM THE SIDE WALL AND 56 INCHES (1422 MM) MINIMUM MEASURED PERPENDICULAR FROM THE REAR WALL. A MINIMUM 60 INCHES (1524 MM) WIDE AND 48 INCHES (1219 MM) DEEP MANEUVERING SPACE SHALL BE PROVIDED IN FRONT OF THE WATER CLOSET.

11B-604.3.2 OVERLAP. THE REQUIRED CLEARANCE AROUND THE WATER CLOSET SHALL BE PERMITTED TO OVERLAP THE WATER CLOSET, ASSOCIATED GRAB BARS, DISPENSERS, SANITARY NAPKIN DISPOSAL UNITS, COAT HOOKS, SHELVES, ACCESSIBLE ROUTES, CLEAR FLOOR SPACE AND CLEARANCES REQUIRED AT OTHER FIXTURES, AND THE TURNING SPACE. NO OTHER FIXTURES OR OBSTRUCTIONS SHALL BE LOCATED WITHIN THE REQUIRED WATER CLOSET CLEARANCE.

EXCEPTION: IN RESIDENTIAL DWELLING UNITS, A LAVATORY COMPLYING WITH 11B-606 SHALL BE PERMITTED ON THE REAR WALL 18 INCHES (457 MM) MINIMUM FROM THE WATER CLOSET CENTERLINE WHERE THE CLEARANCE AT THE WATER CLOSET IS 66 INCHES (1676 MM) MINIMUM MEASURED PERPENDICULAR FROM THE REAR WALL.

11B-604.4 SEATS. THE SEAT HEIGHT OF A WATER CLOSET ABOVE THE FINISH FLOOR SHALL BE 17 INCHES (432 MM) MINIMUM AND 19 INCHES (483 MM) MAXIMUM MEASURED TO THE TOP OF THE SEAT. SEATS SHALL NOT BE SPRUNG TO RETURN TO A LIFTED POSITION. SEATS SHALL BE 2 INCHES (51 MM) HIGH MAXIMUM.

EXCEPTIONS:
1. IN RESIDENTIAL DWELLING UNITS, THE HEIGHT OF WATER CLOSETS SHALL BE PERMITTED TO BE 15 INCHES (381 MM) MINIMUM AND 19 INCHES (483 MM) MAXIMUM ABOVE THE FINISH FLOOR MEASURED TO THE TOP OF THE SEAT.
2. A 3-INCH (76 MM) HIGH SEAT SHALL BE PERMITTED ONLY IN ALTERATIONS WHERE THE EXISTING FIXTURE IS LESS THAN 15 INCHES (381 MM) HIGH.

11B-604.5 GRAB BARS. GRAB BARS FOR WATER CLOSETS SHALL COMPLY WITH 11B-609. GRAB BARS SHALL BE PROVIDED ON THE SIDE WALL CLOSEST TO THE WATER CLOSET AND ON THE REAR WALL. WHERE SEPARATE GRAB BARS ARE REQUIRED ON ADJACENT WALLS AT A COMMON MOUNTING HEIGHT, AN L-SHAPED GRAB BAR MEETING THE DIMENSIONAL REQUIREMENTS OF SECTIONS 11B-604.5.1 AND 11B-604.5.2 SHALL BE PERMITTED.

EXCEPTIONS:
1. IN RESIDENTIAL DWELLING UNITS, GRAB BARS SHALL NOT BE REQUIRED TO BE INSTALLED IN TOILET OR BATHROOMS PROVIDED THAT REINFORCEMENT HAS BEEN INSTALLED IN WALLS AND LOCATED SO AS TO PERMIT THE INSTALLATION OF GRAB BARS COMPLYING WITH 11B-604.5.
2. IN DETENTION OR CORRECTION FACILITIES, GRAB BARS SHALL NOT BE REQUIRED TO BE INSTALLED IN HOUSING OR HOLDING CELLS THAT ARE SPECIALLY DESIGNED WITHOUT PROTRUSIONS FOR PURPOSES OF SUICIDE PREVENTION.

11B-604.5.1 SIDE WALL. THE SIDE WALL GRAB BAR SHALL BE 42 INCHES (1067 MM) LONG MINIMUM, LOCATED 12 INCHES (305 MM) MAXIMUM FROM THE REAR WALL AND EXTENDING 54 INCHES (1372 MM) MINIMUM FROM THE REAR WALL. WITH THE FRONT END POSITIONED 24 INCHES (610 MM) MINIMUM IN FRONT OF THE WATER CLOSET .

11B-604.5.2 REAR WALL. THE REAR WALL GRAB BAR SHALL BE 36 INCHES (914 MM) LONG MINIMUM AND EXTEND FROM THE CENTERLINE OF THE WATER CLOSET 12 INCHES (305 MM) MINIMUM ON ONE SIDE AND 24 INCHES (610 MM) MINIMUM ON THE OTHER SIDE.

EXCEPTIONS:
1. THE REAR GRAB BAR SHALL BE PERMITTED TO BE 24 INCHES (610 MM) LONG MINIMUM, CENTERED ON THE WATER CLOSET, WHERE WALL SPACE DOES NOT PERMIT A LENGTH OF 36 INCHES (914 MM) MINIMUM DUE TO THE LOCATION OF A RECESSED FIXTURE ADJACENT TO THE WATER CLOSET.
2. WHERE AN ADMINISTRATIVE AUTHORITY REQUIRES FLUSH CONTROLS FOR FLUSH VALVES TO BE LOCATED IN A POSITION THAT CONFLICTS WITH THE LOCATION OF THE REAR GRAB BAR, THEN THE REAR GRAB BAR SHALL BE PERMITTED TO BE SPLIT OR SHIFTED TO THE OPEN SIDE OF THE TOILET AREA.

11B-604.6 FLUSH CONTROLS. FLUSH CONTROLS SHALL BE HAND OPERATED OR AUTOMATIC. HAND OPERATED FLUSH CONTROLS SHALL COMPLY WITH 11B-309EXCEPT THEY SHALL BE LOCATED 44 INCHES (1118 MM) MAXIMUM ABOVE THE FLOOR . FLUSH CONTROLS SHALL BE LOCATED ON THE OPEN SIDE OF THE WATER CLOSET EXCEPT IN AMBULATORY ACCESSIBLE COMPARTMENTS COMPLYING WITH 11B-604.8.2.
11B-604.7 DISPENSERS. TOILET PAPER DISPENSERS SHALL COMPLY WITH 11B-309.4 AND SHALL BE 7 INCHES (178 MM) MINIMUM AND 9 INCHES (229 MM) MAXIMUM IN FRONT OF THE WATER CLOSET MEASURED TO THE CENTERLINE OF THE DISPENSER. THE OUTLET OF THE DISPENSER SHALL BE BELOW THE GRAB BAR, 19 INCHES (483 MM) MINIMUM ABOVE THE FINISH FLOOR AND SHALL NOT BE LOCATED BEHIND GRAB BARS. DISPENSERS SHALL NOT BE OF A TYPE THAT CONTROLS DELIVERY OR THAT DOES NOT ALLOW CONTINUOUS PAPER FLOW.

11B-604.8 TOILET COMPARTMENTS. WHEELCHAIR ACCESSIBLE TOILET COMPARTMENTS SHALL MEET THE REQUIREMENTS OF 11B-604.8.1 AND11B-604.8.3. COMPARTMENTS CONTAINING MORE THAN ONE PLUMBING FIXTURE SHALL COMPLY WITH 11B-603. AMBULATORY ACCESSIBLE COMPARTMENTS SHALL COMPLY WITH 11B-604.8.2 AND11B-604.8.3.

11B-604.8.1 WHEELCHAIR ACCESSIBLE COMPARTMENTS. WHEELCHAIR ACCESSIBLE COMPARTMENTS SHALL COMPLY WITH 11B-604.8.1.

11B-604.8.1.1 SIZE. WHEELCHAIR ACCESSIBLE COMPARTMENTS SHALL BE 60 INCHES (1524 MM) WIDE MINIMUM MEASURED PERPENDICULAR TO THE SIDE WALL, AND 56 INCHES (1422 MM) DEEP MINIMUM FOR WALL HUNG WATER CLOSETS AND 59 INCHES (1499 MM) DEEP MINIMUM FOR FLOOR MOUNTED WATER CLOSETS MEASURED PERPENDICULAR TO THE REAR WALL. WHEELCHAIR ACCESSIBLE COMPARTMENTS FOR CHILDREN'S USE SHALL BE 60 INCHES (1524 MM) WIDE MINIMUM MEASURED

(FS) JANITOR'S FLOOR SINK
SEE PLUMBING PLANS FOR SPECIFICATION
NOTE:

(G1) HANDICAP GRAB BAR (36"L)
BOBRICK, B-6806x36
NOTES: 1. ALL FIXTURES TO BE MOUNTED PER ADA REQ'MTS. OR A MIN. OF 1 1/2" ABOVE TOP OF THE FLUSHOMETER.
2. FIXTURE TO BE MOUNTED PER ADA REQ'MTS.

(G2) HANDICAP GRAB BAR (42"L)
BOBRICK, B-6806x42
NOTES: 1. FIXTURE TO BE MOUNTED PER ADA REQ'MTS.

(HD) HAND DRYER
AMERICAN DRYER INC., SEMI-RECESSED, EXT-SS WITH RECESS KIT
NOTE:

(HM) HANDICAP MIRROR
BOBRICK, SURFACE MTD., B-293-1830
NOTES: 1. FIXTURE TO BE MOUNTED PER ADA REQUIREMENTS.

(HT) STANDARD TOILET; FLOOR MOUNT
AMERICAN STANDARD "AFWALL FLOWISE ELONGATED 1.28 GPF FLUSHOMETER
SEE PLUMBING PLANS FOR SPECIFICATIONS.
NOTES: 1. FIXTURE TO BE MOUNTED PER ADA REQUIREMENTS.

(HU) HANDICAP URINAL
AMERICAN STANDARD
SEE PLUMBING PLANS FOR ADDITIONAL SPECIFICATIONS.
NOTES: FIXTURE TO BE MOUNTED PER ADA REQUIREMENTS.

(JC) UTILITY SHELF (34"L)
BOBRICK, SURFACE MTD., B-239x34

(JF) JANITOR'S SINK FAUCET
SEE PLUMBING PLANS FOR SPECIFICATION

(JS) SOAP DISPENSER
BOBRICK, SURFACE MTD., B-2112

(JT) ROLL-TOWEL DISPENSER- AUTOMATIC
BOBRICK, SURFACE MTD., B-72974

(LF) LAVATORY FAUCET
AMERICAN STANDARD
SEE PLUMBING PLANS FOR ADDITIONAL SPECIFICATIONS.
NOTE: TO BE INSTALLED IN STUDENT RESTROOMS AND FACULTY RESTROOMS

(M) STANDARD MIRROR
BOBRICK, SURFACE MTD., B-290-1830
NOTES: 1. FIXTURE TO BE MOUNTED PER ADA REQUIREMENTS.

(NV) NAPKIN/TAMPON VENDOR
BOBRICK, RECESSED, B-3706
NOTE: FIXTURE TO BE MOUNTED PER ADA REQ'MTS.

(PO) TOILET TISSUE DISPENSER/SEAT COVER DISPENSER
BOBRICK, PARTITION MOUNTED, B-34715
NOTES: FIXTURE TO BE MOUNTED PER ADA REQ'MTS.

(PR) TOILET TISSUE DISPENSER/SEAT COVER DISPENSER/ SANITARY NAPKIN DISPOSAL
BOBRICK, PARTITION MOUNTED, B-35715
NOTE: FIXTURE TO BE MOUNTED PER ADA REQ'MTS.

(PT) RECESSED CONVERTIBLE PAPER TOWEL DISPENSER AND WASTE RECEPTACLE
BOBRICK, RECESSED, B-3944
NOTE: FIXTURE TO BE MOUNTED PER ADA REQ'MTS.

(SD) SOAP DISPENSER
BOBRICK, WALL MTD., B-2111
NOTES: 1. FIXTURE TO BE MOUNTED PER ADA REQUIREMENTS.

(SO) TOILET TISSUE DISPENSER/SEAT COVER DISPENSER/ SANITARY NAPKIN DISPOSAL
BOBRICK, SURFACE- MOUNTED, B-3579
NOTE: FIXTURE TO BE MOUNTED PER ADA REQ'MTS.

(T) STANDARD TOILET; FLOOR MOUNT
AMERICAN STANDARD "AFWALL FLOWISE ELONGATED 1.28 GPF FLUSHOMETER
SEE PLUMBING PLANS FOR ADDITIONAL SPECIFICATIONS.

(TP) TOILET PARTITIONS
BOBRICK, 2042, HIGH PRESSURE PARTITIONS WITH OPTION OF ANTI GRAFFITI.
NOTE: FIXTURE TO BE MOUNTED PER ADA REQ'MTS.

(TC) TOILET TISSUE DISPENSER/SEAT COVER
BOBRICK, RECESSED, B-3474
NOTE: FIXTURE TO BE MOUNTED PER ADA REQ'MTS.

(TN) NAPKIN DISPOSAL/TOILET TISSUE/SEAT COVER DISPENSER
BOBRICK, RECESSED, B-3574
NOTE: FIXTURE TO BE MOUNTED PER ADA REQ'MTS.

(U) HANDICAP URINAL
AMERICAN STANDARD
SEE PLUMBING PLANS FOR ADDITIONAL SPECIFICATIONS.
NOTES: FIXTURE TO BE MOUNTED PER ADA REQUIREMENTS.

(UP) URINAL SCREEN
BOBRICK, 2043, HIGH PRESSURE PARTITIONS WITH OPTION OF ANTI GRAFFITI. 24" AND 63"
NOTE: PARTITIONS TO BE MOUNTED PER ADA REQUIREMENTS.

(WL) HC/STANDARD LAVATORY, WALL MTD.
AMERICAN STANDARD
SEE PLUMBING PLANS FOR ADDITIONAL SPECIFICATIONS.
NOTES: 1. FIXTURE TO BE MOUNTED PER ADA REQUIREMENTS.
PROVIDE CONCEALED ARM SYSTEM BY ZURN PLUMBING PRODUCTS GROUP MODEL #Z12231 OR EQUAL

1 GENERAL DISABLED ACCESSIBLE NOTES
SCALE: NONE- SECTIONS ARE REFERENCE FROM CBC 2013

2 GENERAL DISABLED ACCESSIBLE NOTES
SCALE: NONE

TABLE 11B-604.9
SUGGESTED MOUNTING DIMENSIONS FOR CHILDREN

THE DIVISION OF THE STATE ARCHITECT-ACCESS COMPLIANCE RECOMMEND THE FOLLOWING DIMENSIONS AS ADEQUATELY SERVING THE NEEDS OF CHILDREN IN PROJECTS UNDER OUR JURISDICTION THESE RECOMMENDATIONS ARE BASED ON THE FEDERAL "RECOMMENDATIONS FOR ACCESSIBILITY FOR CHILDREN IN ELEMENTARY SCHOOL" AND OTHER RECOGNIZED PUBLICATIONS ON ACCESS FOR CHILDREN:
A= ADULT DIMENSIONS (AGE 12 AND OVER)
Y= YOUTH DIMENSIONS (AGE 9 THROUGH 12)
E= ELEMENTARY DIMENSIONS (AGE 5 THROUGH 8)
K= KINDERGARTEN PRESCHOOL DIMENSIONS (AGE 3 AND 4)

	SUGGESTED			
DIMENSION	A (INCHES)	Y (INCHES)	E (INCHES)	K (INCHES)
TOILET CENTERING FROM WALL	17–18	15–18	12–15	12MAX
TOILET SEAT HEIGHT/DIMENSIONS TO TOP OF SEAT	17–19	15–17	12–15	11–12
GRAB BAR HEIGHT (SIDE)	33–36	25–27	20–25	18–20
TOILET PAPER IN FRONT OF TOILET	19MIN	17–19	14–17	14MAX
NAPKIN DISPOSAL IN FRONT OF TOILET	19MIN	12MAX	N/A	N/A

3 SUGGESTED MOUNTING DIMENSIONS
SCALE: NONE

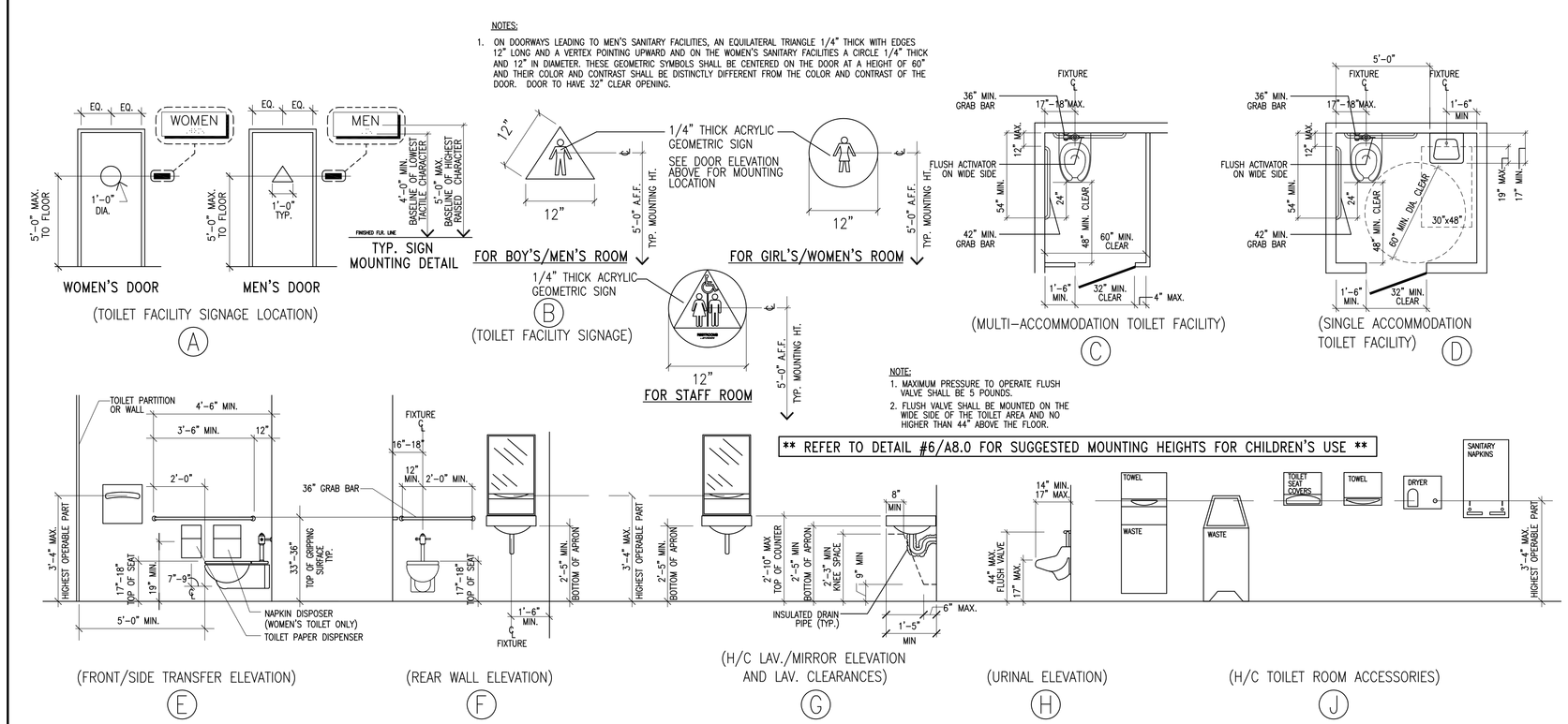

4 TYPICAL RESTROOM DETAILS
SCALE: NONE- SECTIONS ARE REFERENCE FROM CBC 2013

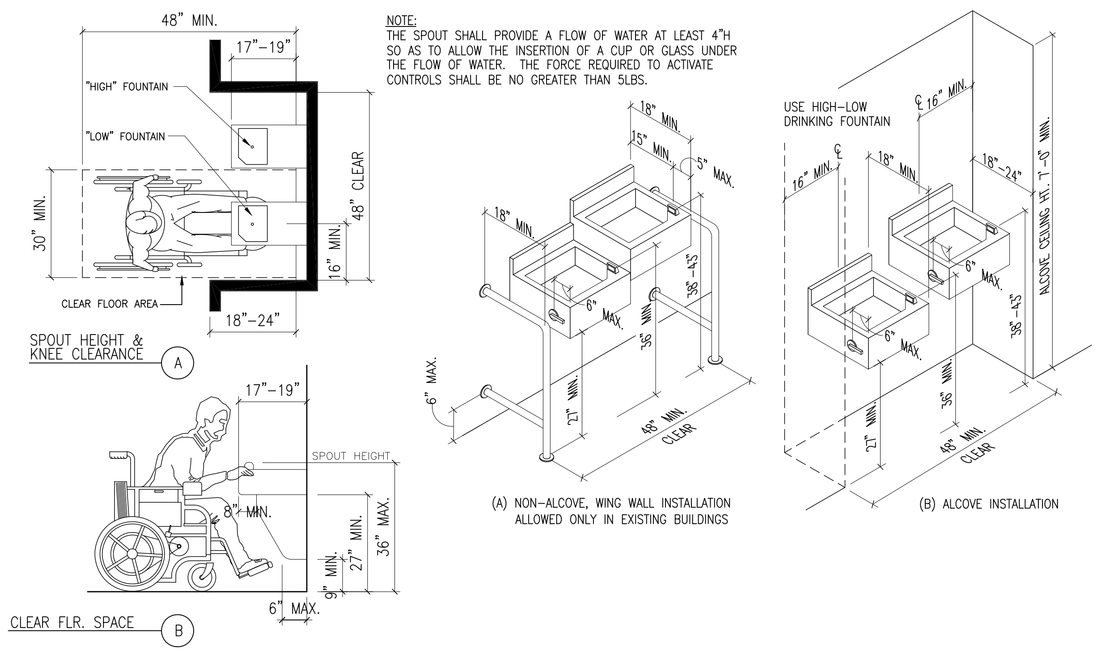

DRINKING FOUNTAINS

1. 11B-602.1 GENERAL. DRINKING FOUNTAINS SHALL COMPLY WITH 11B-307 AND 11B-602.
2. 11B-602.2 CLEAR FLOOR SPACE. UNITS SHALL HAVE A CLEAR FLOOR OR GROUND SPACE COMPLYING WITH 11B-305 POSITIONED FOR A FORWARD APPROACH AND CENTERED ON THE UNIT. KNEE AND TOE CLEARANCE COMPLYING WITH 11B-306 SHALL BE PROVIDED.
   EXCEPTION: A PARALLEL APPROACH COMPLYING WITH 11B-305 SHALL BE PERMITTED AT UNITS FOR CHILDREN'S USE WHERE THE SPOUT IS 30 INCHES (762 MM) MAXIMUM ABOVE THE FINISH FLOOR OR GROUND AND IS 3½ INCHES (90 MM) MAXIMUM FROM THE FRONT EDGE OF THE UNIT, INCLUDING BUMPERS.
3. 11B-602.3 OPERABLE PARTS. OPERABLE PARTS SHALL COMPLY WITH 11B-309. (BEGIN UNDERLINE) THE BUBBLER SHALL BE ACTIVATED BY A MANUALLY OPERATED SYSTEM THAT IS FRONT MOUNTED OR SIDE MOUNTED AND LOCATED WITHIN 6 INCHES (152 MM) OF THE FRONT EDGE OF THE FOUNTAIN OR AN ELECTRONICALLY CONTROLLED DEVICE.
4. 11B-602.4 SPOUT HEIGHT. SPOUT OUTLETS SHALL BE 36 INCHES (915 MM) MAXIMUM ABOVE THE FINISH FLOOR OR GROUND.
5. 11B-602.5 SPOUT LOCATION. THE SPOUT SHALL BE LOCATED 15 INCHES (381 MM) MINIMUM FROM THE VERTICAL SUPPORT AND 5 INCHES (127 MM) MAXIMUM FROM THE FRONT EDGE OF THE UNIT, INCLUDING BUMPERS.
6. 11B-602.6 WATER FLOW. THE SPOUT SHALL PROVIDE A FLOW OF WATER 4 INCHES (102 MM) HIGH MINIMUM AND SHALL BE LOCATED 5 INCHES (127 MM) MAXIMUM FROM THE FRONT OF THE UNIT. THE ANGLE OF THE WATER STREAM SHALL BE MEASURED HORIZONTALLY RELATIVE TO THE FRONT FACE OF THE UNIT. WHERE SPOUTS ARE LOCATED LESS THAN 3 INCHES (76 MM) OF THE FRONT OF THE UNIT, THE ANGLE OF THE WATER STREAM SHALL BE 30 DEGREES MAXIMUM. WHERE SPOUTS ARE LOCATED BETWEEN 3 INCHES (76 MM) AND 5 INCHES (127 MM) MAXIMUM FROM THE FRONT OF THE UNIT, THE ANGLE OF THE WATER STREAM SHALL BE 15 DEGREES MAXIMUM.
7. 11B-602.7 DRINKING FOUNTAINS FOR STANDING PERSONS. SPOUT OUTLETS OF DRINKING FOUNTAINS FOR STANDING PERSONS SHALL BE 38 INCHES (965 MM) MINIMUM AND 43 INCHES (1092 MM) MAXIMUM ABOVE THE FINISH FLOOR OR GROUND.
8. 11B-602.8 DEPTH. WALL- AND POST-MOUNTED CANTILEVERED DRINKING FOUNTAINS SHALL BE A MINIMUM OF 18 INCHES (457 MM) AND A MAXIMUM OF 19 INCHES (483 MM) IN DEPTH.
9. 11B-602.9 ALCOVES. ALL DRINKING FOUNTAINS SHALL BE LOCATED COMPLETELY WITHIN ALCOVES, POSITIONED COMPLETELY BETWEEN WING WALLS, OR OTHERWISE POSITIONED SO AS NOT TO ENCROACH INTO PEDESTRIAN WAYS. THE PROTECTED AREA WITHIN WHICH A DRINKING FOUNTAIN IS LOCATED SHALL BE 32 INCHES (813MM) WIDE MINIMUM AND 18 INCHES (457 MM) DEEP MINIMUM, AND SHALL COMPLY WITH SECTION 11B-305.7. WHEN USED WING WALLS OR BARRIERS SHALL PROJECT HORIZONTALLY AT LEAST AS FAR AS THE DRINKING FOUNTAIN AND TO WITHIN 6 INCHES (152 MM) VERTICALLY FROM THE FLOOR OR GROUND SURFACE .

5 DRINKING FOUNTAINS
SCALE: N.T.S.

FRANCO ARCHITECTS INC.
12345 Ventura Blvd. H
Studio City, CA 91604
Tel 818 754-2030
Fax 818 754-2032
Architecture and Planning

MAGNOLIA SCIENCE ACADEMY
18220 SHERMAN WAY, RESEDA, CA91335

REV	DESCRIPTION	DATE
	PLAN CHECK #1	6/14/2017

LICENSED ARCHITECT
JOHNNY D. WANG
C27010
4/30/2019
RENEWAL DATE
STATE OF CALIFORNIA

PROJECT
MAGNOLIA SCIENCE ACADEMY

PROJECT ADDRESS
18220 SHERMAN WAY,
RESEDA, CA91335

DRAWING TITLE
HC NOTES,
DETAILS & RESTROOM SPECIFICATIONS

DRAWN BY:
ISSUE DATE 6/14/2017
JOB NUMBER
DRAWING SCALE AS NOTED
APPROVED BY:

DRAWING NUMBER
A8.0

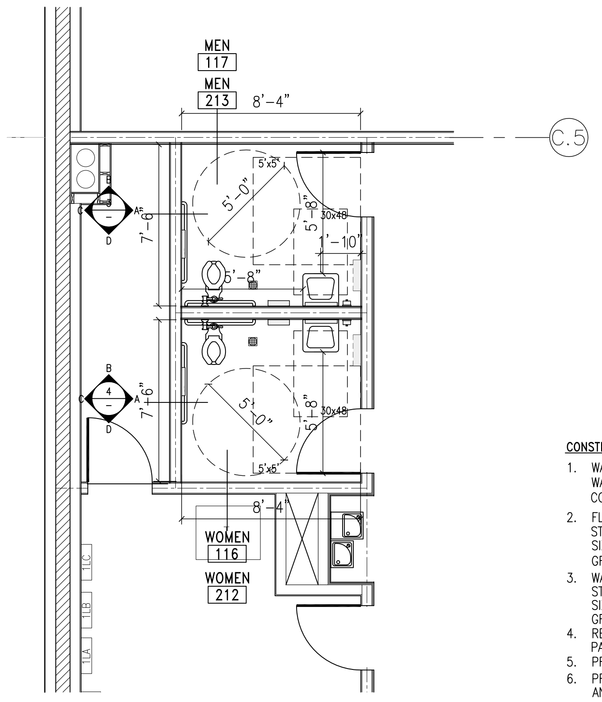

CONSTRUCTION NOTES

1. WALLS:
   WAINSCOTT TO 6'-0" AFF. REFER TO CORRESPONDING ELEVATIONS "3,4/A9.1",
2. FLOORS: CERAMIC TILE
   STYLE: SEE FINISH SPECIFICATIONS SHEET A1.5
   SIZE: SEE FINISH SPECIFICATIONS SHEET A1.5;
   GROUT: TBD
3. WALL BASE: CERAMIC TILE
   STYLE: SEE FINISH SPECIFICATIONS SHEET A1.5
   SIZE: SEE FINISH SPECIFICATIONS SHEET A1.5;
   GROUT: TBD
4. REFERENCE ELEVATIONS SHEET "/AX.X" FOR TYPICAL PATTERN WITHIN ALL NEW RESTROOMS.
5. PROVIDE 1/8" SLOPE TO FLOOR DRAIN.
6. PROVIDE WATERPROOF UNDER FLOOR TILES AND 8" UP WALLS.

1 MEN & WOMEN RESTROOMS (RMS. #116, 117, 212 AND 213)
CONSTRUCTION PLAN SCALE: 1/4" = 1'-0"

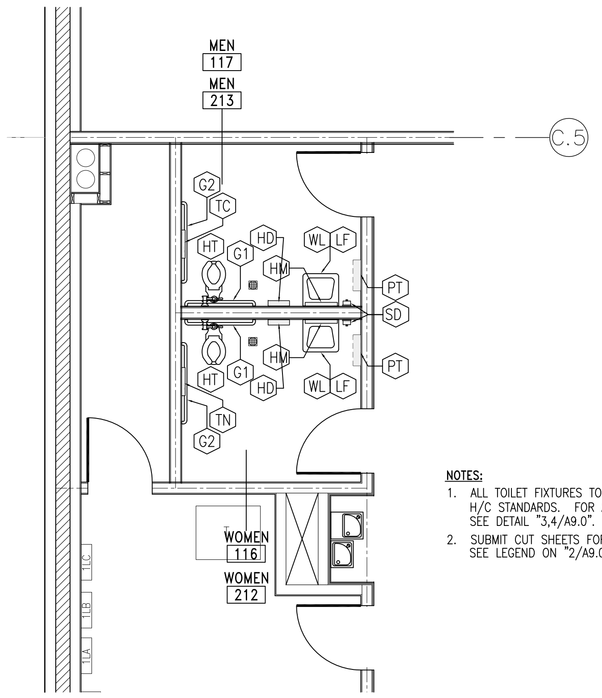

NOTES:

1. ALL TOILET FIXTURES TO CONFORM WITH H/C STANDARDS. FOR ADDITIONAL INFO. SEE DETAIL "3,4/A9.0".
2. SUBMIT CUT SHEETS FOR ALL FIXTURES, SEE LEGEND ON "2/A9.0".

2 MEN & WOMEN RESTROOMS (RMS. #116, 117, 212, AND 213)
FIXTURE PLAN SCALE: 1/4" = 1'-0"

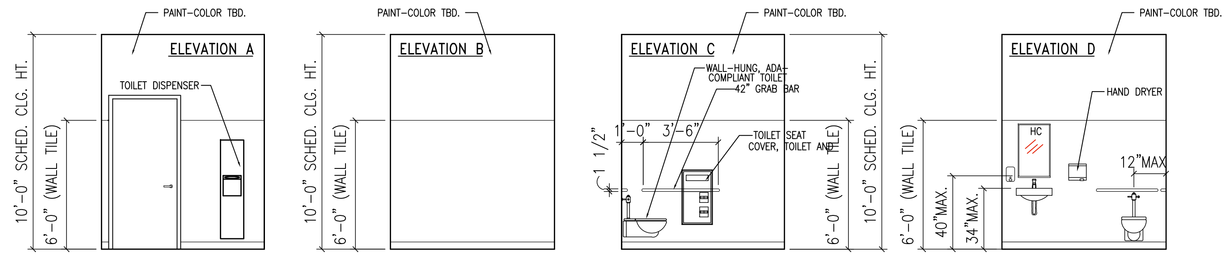

3 MEN RESTROOM (RMS. #117 AND 213)
ELEVATION PLAN SCALE: 1/4" = 1'-0"

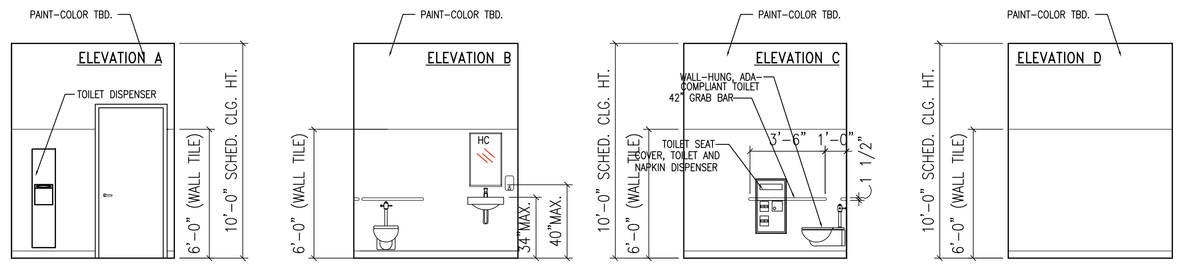

4 WOMEN RESTROOM (RMS. #116 AND 212)
ELEVATION PLAN SCALE: 1/4" = 1'-0"

CONSTRUCTION NOTES

1. WALLS:
   WAINSCOTT TO 6'-0" AFF. REFER TO CORRESPONDING ELEVATIONS "7,8,9/A9.1",
2. FLOORS: CERAMIC TILE
   STYLE: SEE FINISH SPECIFICATIONS SHEET A2.5, A1.5
   SIZE: SEE FINISH SPECIFICATIONS SHEET A2.5, A1.5
   GROUT: TBD
3. WALL BASE: CERAMIC TILE
   STYLE: SEE FINISH SPECIFICATIONS SHEET A2.5, A3.5
   SIZE: SEE FINISH SPECIFICATIONS SHEET A2.5, A3.5
   GROUT: TBD
4. REFERENCE ELEVATIONS SHEET "/AX.X" FOR TYPICAL PATTERN WITHIN ALL NEW RESTROOMS.
5. PROVIDE 1/8" SLOPE TO FLOOR DRAIN.
6. PROVIDE WATERPROOF UNDER FLOOR TILES AND 8" UP WALLS.

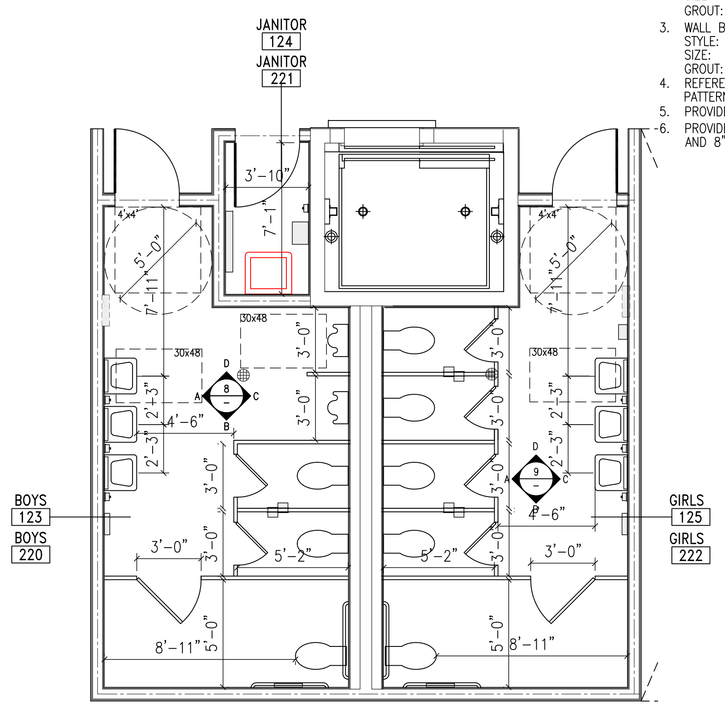

5 BOYS AND GIRLS RESTROOM (RMS. #123, 124, 125, AND 220, 221, 222)
CONSTRUCTION PLAN SCALE: 1/4" = 1'-0"

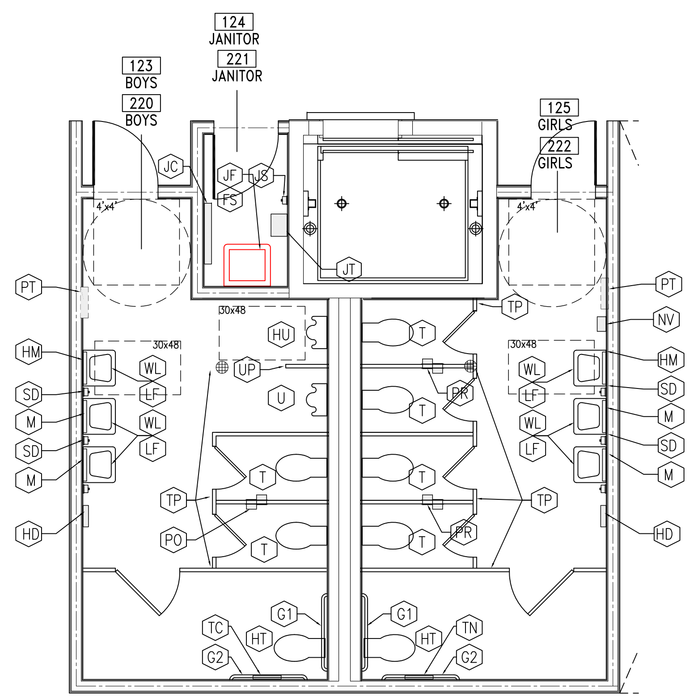

NOTES:

1. ALL TOILET FIXTURES TO CONFORM WITH H/C STANDARDS. FOR ADDITIONAL INFO. SEE DETAIL "3,4/A9.0".
2. SUBMIT CUT SHEETS FOR ALL FIXTURES, SEE LEGEND ON "2/A9.0".

6 BOYS AND GIRLS RESTROOM (RMS. #123, 124, 125, AND 220, 221, 222)
FIXTURE PLAN SCALE: 1/4" = 1'-0"

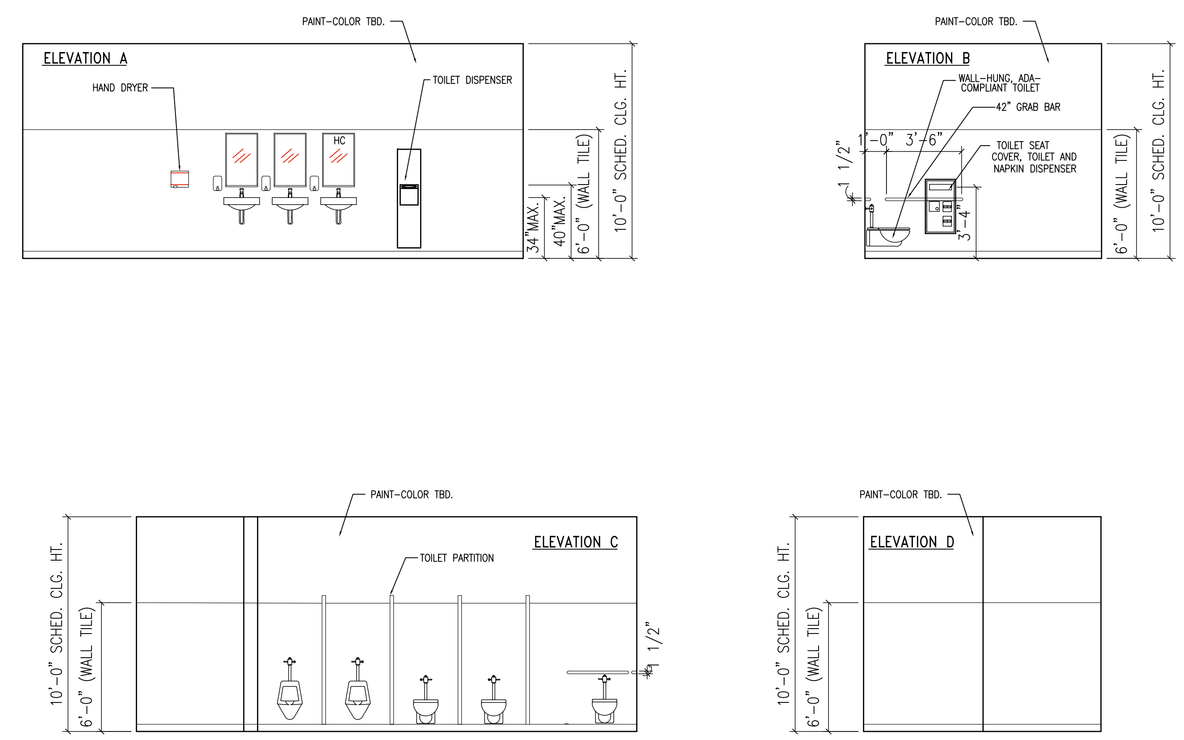

8 BOYS RESTROOM (RMS. #123 AND 220)
ELEVATION PLAN SCALE: 1/4" = 1'-0"

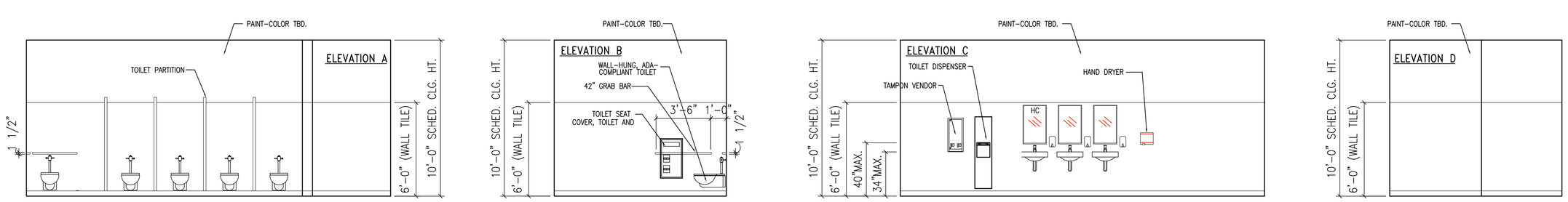

9 GIRLS RESTROOM (RMS. #125 AND 222)
ELEVATION PLAN SCALE: 1/4" = 1'-0"

FRANCO ARCHITECTS INC.
12345 Ventura Blvd. H
Studio City, CA 91604
Tel 818 754-2030
Fax 818 754-2032
Architecture and Planning

MAGNOLIA SCIENCE ACADEMY
18220 SHERMAN WAY, RESEDA, CA91335

REV	DESCRIPTION	DATE
	PLAN CHECK #1	6/14/2017

LICENSED ARCHITECT
JOHANN D. WANGT
C27010
4/30/2019
RENEWAL DATE
STATE OF CALIFORNIA

PROJECT
MAGNOLIA SCIENCE ACADEMY

PROJECT ADDRESS
18220 SHERMAN WAY,
RESEDA, CA91335

DRAWING TITLE
ENLARGED RESTROOM PLANS AND ELEVATIONS

DRAWN BY
ISSUE DATE 6/14/2017
JOB NUMBER
DRAWING SCALE AS NOTED
APPROVED BY

DRAWING NUMBER
A8.1

CONSTRUCTION NOTES

1. WALLS:
   WAINSCOTT TO 6'-0" AFF. REFER TO CORRESPONDING ELEVATIONS "7,8,9/A9.1".
2. FLOORS: CERAMIC TILE
   STYLE: SEE FINISH SPECIFICATIONS SHEET A2.5, A3.5
   SIZE: SEE FINISH SPECIFICATIONS SHEET A2.5, A3.5
   GROUT: TBD
3. WALL BASE: CERAMIC TILE
   STYLE: SEE FINISH SPECIFICATIONS SHEET A2.5, A3.5
   SIZE: SEE FINISH SPECIFICATIONS SHEET A2.5, A3.5
   GROUT: TBD
4. REFERENCE ELEVATIONS SHEET "/AX.X" FOR TYPICAL PATTERN WITHIN ALL NEW RESTROOMS.
5. PROVIDE 1/8" SLOPE TO FLOOR DRAIN.
6. PROVIDE WATERPROOF UNDER FLOOR TILES AND 8" UP WALLS.

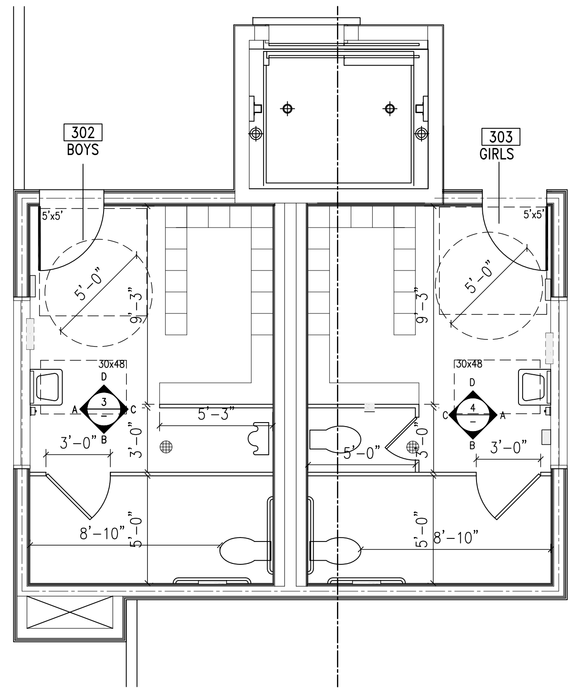

1 BOYS AND GIRLS RESTROOM (RMS. #302 AND 303)
CONSTRUCTION PLAN SCALE: 1/4" = 1'-0"

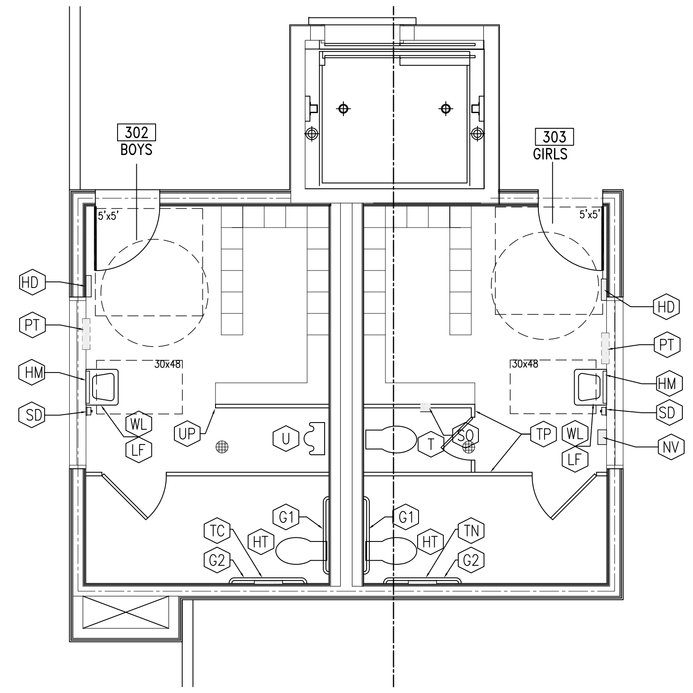

NOTES:

1. ALL TOILET FIXTURES TO CONFORM WITH H/C STANDARDS. FOR ADDITIONAL INFO. SEE DETAIL "3,4/A9.0".
2. SUBMIT CUT SHEETS FOR ALL FIXTURES, SEE LEGEND ON "2/A9.0".

2 BOYS AND GIRLS RESTROOM (RMS. #302 AND 303)
FIXTURE PLAN SCALE: 1/4" = 1'-0"

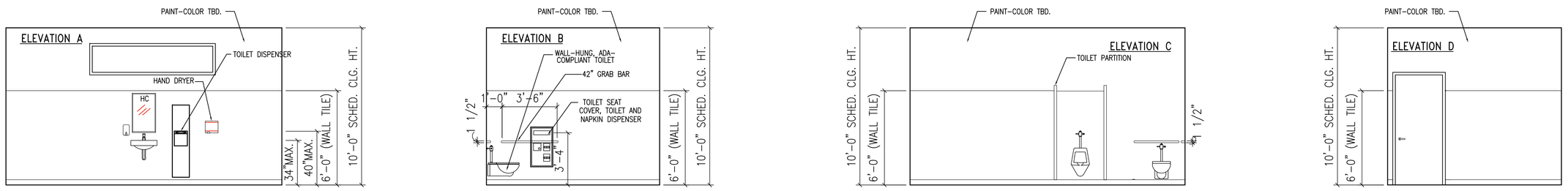

3 BOYS RESTROOM (RMS. #302)
ELEVATION PLAN SCALE: 1/4" = 1'-0"

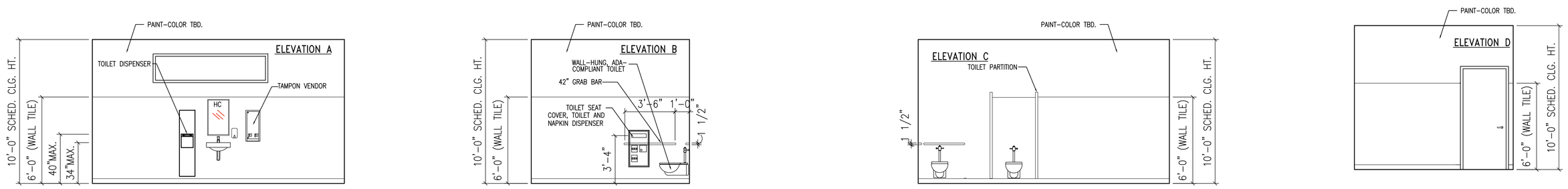

4 GIRLS RESTROOM (RMS. #303)
ELEVATION PLAN SCALE: 1/4" = 1'-0"

FRANCO ARCHITECTS INC.
12345 Ventura Blvd. H
Studio City, CA 91604
Tel 818 754-2030
Fax 818 754-2032
Architecture and Planning

MAGNOLIA SCIENCE ACADEMY
18220 SHERMAN WAY, RESEDA, CA91335

REV	DESCRIPTION	DATE
	PLAN CHECK #1	6/14/2017

LICENSED ARCHITECT
JOHANN D. WANG
C27010
4/30/2019
RENEWAL DATE
STATE OF CALIFORNIA

PROJECT
MAGNOLIA SCIENCE ACADEMY

PROJECT ADDRESS
18220 SHERMAN WAY,
RESEDA, CA91335

DRAWING TITLE
ENLARGED RESTROOM PLANS AND ELEVATIONS

DRAWN BY
ISSUE DATE 6/14/2017
JOB NUMBER
DRAWING SCALE AS NOTED
APPROVED BY:
DRAWING NUMBER
A8.2

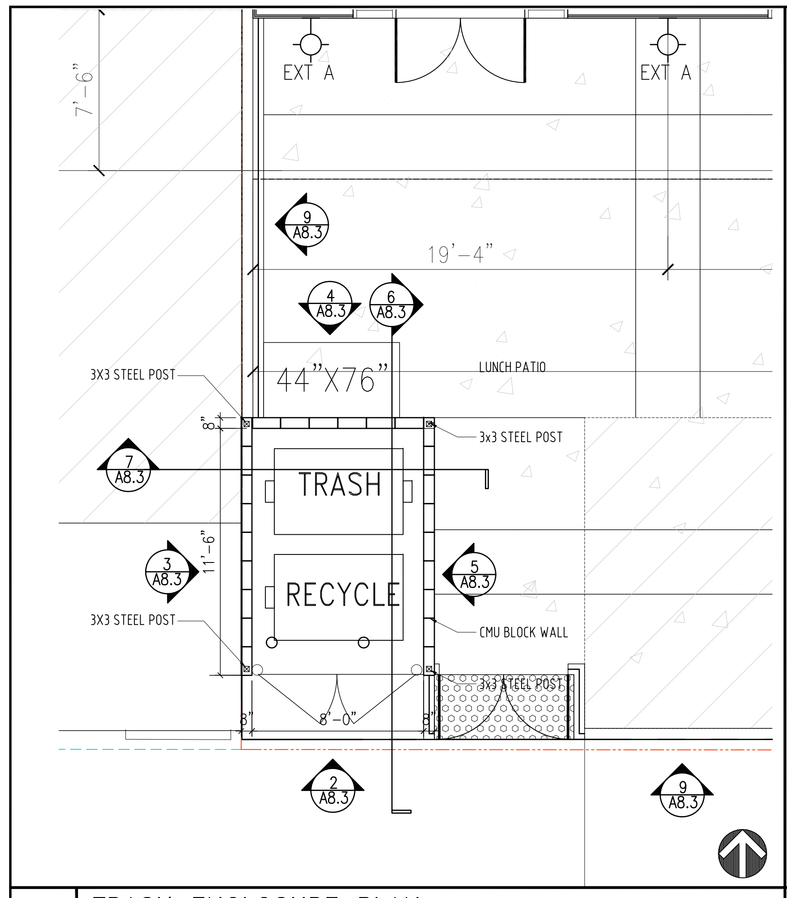

1 TRASH ENCLOSURE PLAN
SCALE: 1/4"=1'-0"

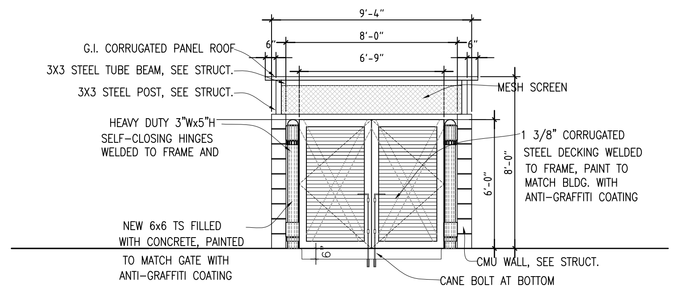

2 TRASH ENCLOSURE ELEVATION
SCALE: 1/4"=1'-0"

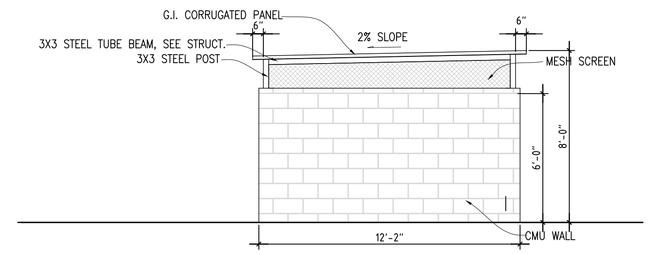

3 TRASH ENCLOSURE ELEVATION
SCALE: 1/4"=1'-0"

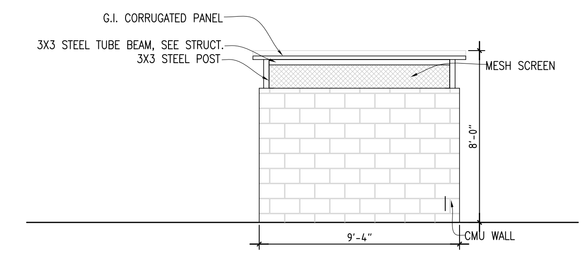

4 TRASH ENCLOSURE ELEVATION
SCALE: 1/4"=1'-0"

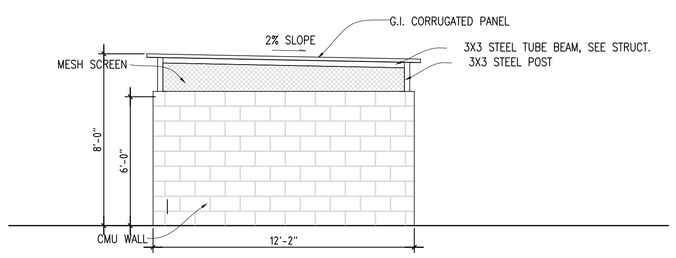

5 TRASH ENCLOSURE ELEVATION
SCALE: 1/4"=1'-0"

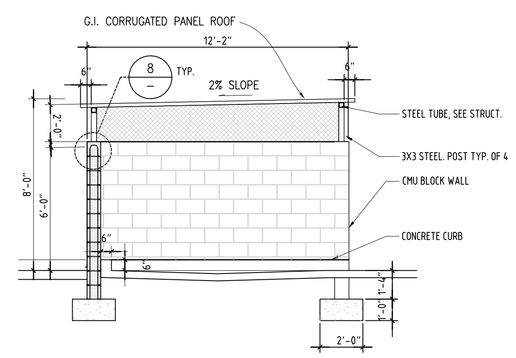

6 TRASH ENCLOSURE SECTION
SCALE: 1/4"=1'-0"

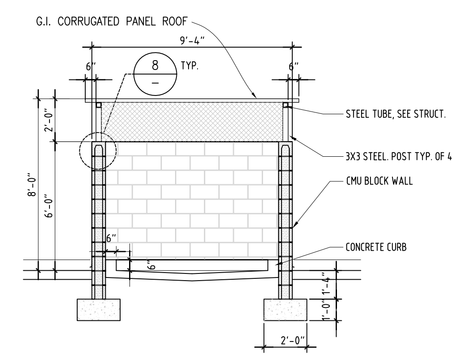

7 TRASH ENCLOSURE SECTION
SCALE: 1/4"=1'-0"

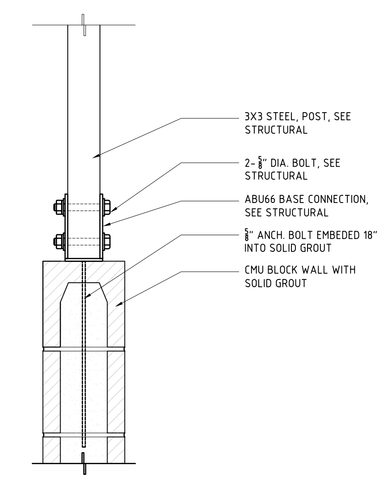

8 TRASH ENCLOSURE POST DETAIL
SCALE: 1 1/2"=1'-0"

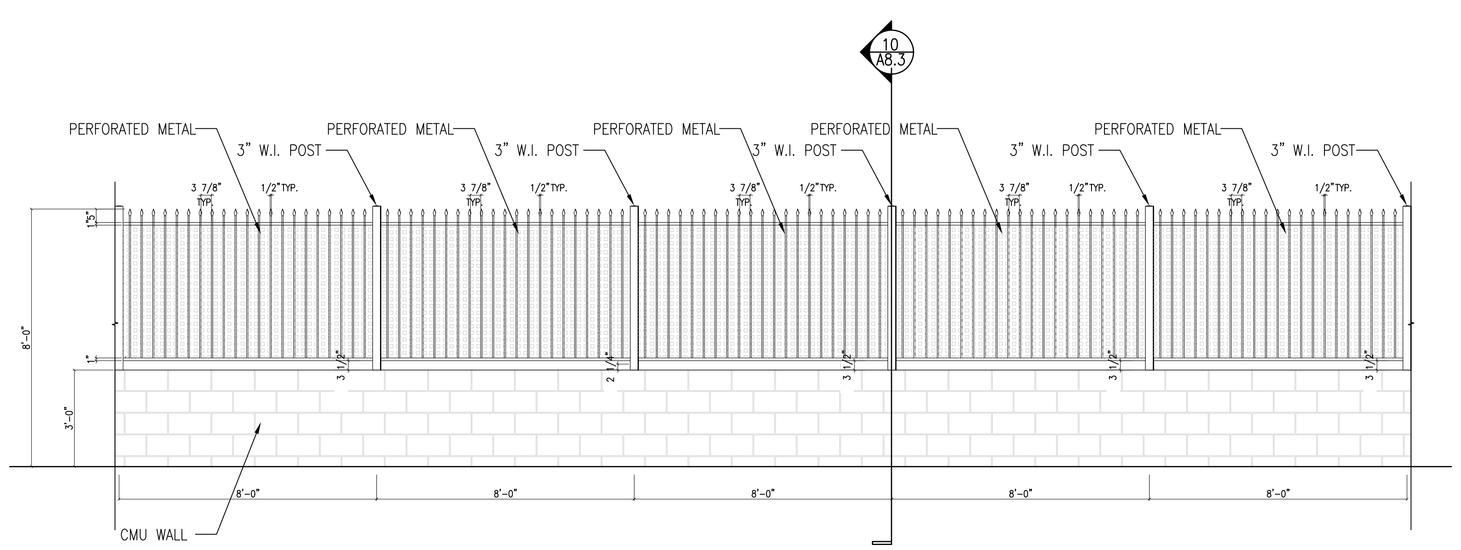

9 CMU WALL W/FENCE @ SOUTH P.L.- ELEVATION
SCALE: 3/8"=1'-0"

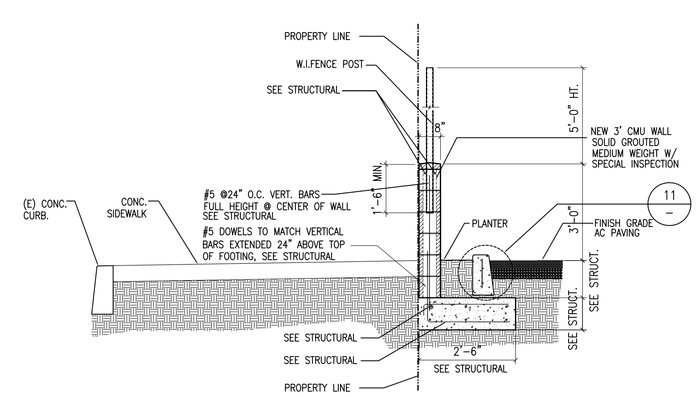

10 CMU WALL W/FENCE SECTION
SCALE: 3/8"=1'-0"

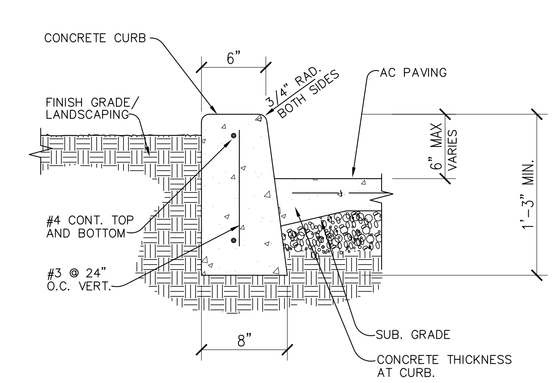

11 CONCRETE CURB AND PLANTER
SCALE: 1-1/2"=1'-0"

FRANCO ARCHITECTS INC.
12345 Ventura Blvd. H
Studio City, CA 91604
Tel 818 754-2030
Fax 818 754-2032
Architecture and Planning

MAGNOLIA SCIENCE ACADEMY
18220 SHERMAN WAY, RESEDA, CA91335

REV	DESCRIPTION	DATE
	PLAN CHECK #1	6/14/2017

LICENSED ARCHITECT
JOHANN D. FRANCO
C27010
4/30/2019
RENEWAL DATE
STATE OF CALIFORNIA

PROJECT
MAGNOLIA SCIENCE ACADEMY

PROJECT ADDRESS
18220 SHERMAN WAY, RESEDA, CA91335

DRAWING TITLE
ENLARGED TRASH ENCLOSURE & CMU WALL W/FENCE

DRAWN BY
ISSUE DATE 6/14/2017
JOB NUMBER
DRAWING SCALE AS NOTED
APPROVED BY:

DRAWING NUMBER
A8.3

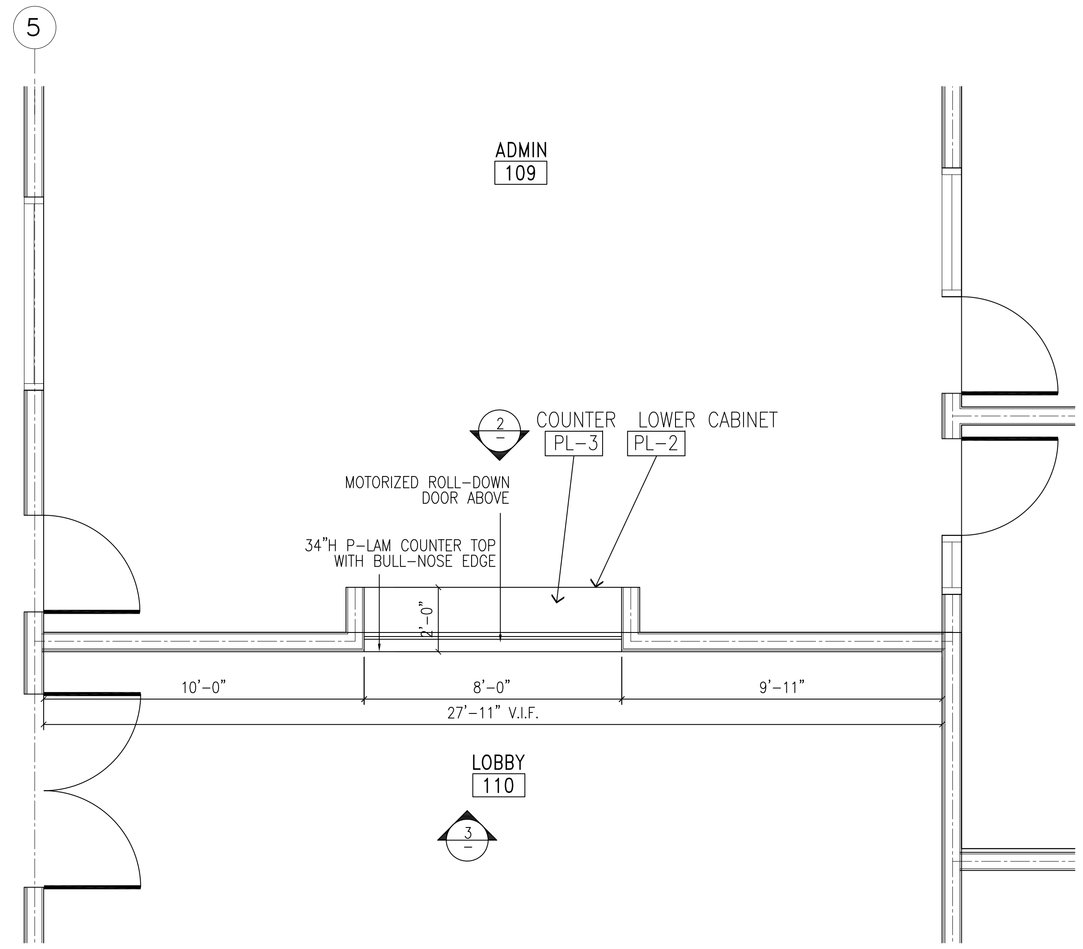

GENERAL NOTES
1. REFER TO "A" FOR ADDITIONAL CONSTRUCTION NOTES.
2. REFER TO "A" FOR FINISH SPECIFICATIONS.
3. ALL CABINET INTERIORS & ADJUSTABLE SHELVES TO BE WHITE MELAMINE U.O.N.

1 ADMINASTRATION/LOBBY- PARTIAL PLAN (RM. #109, #110)
SCALE: 3/8" = 1'-0"

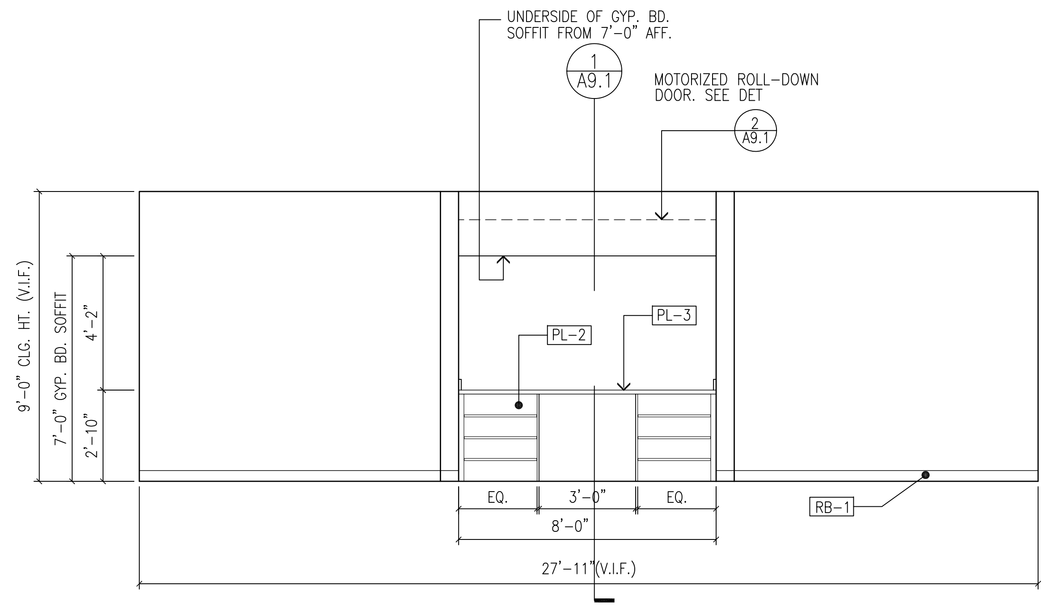

2 ADMINISTRATION COUNTER ELEVATION (RM. #109)
SCALE: 3/8" = 1'-0"

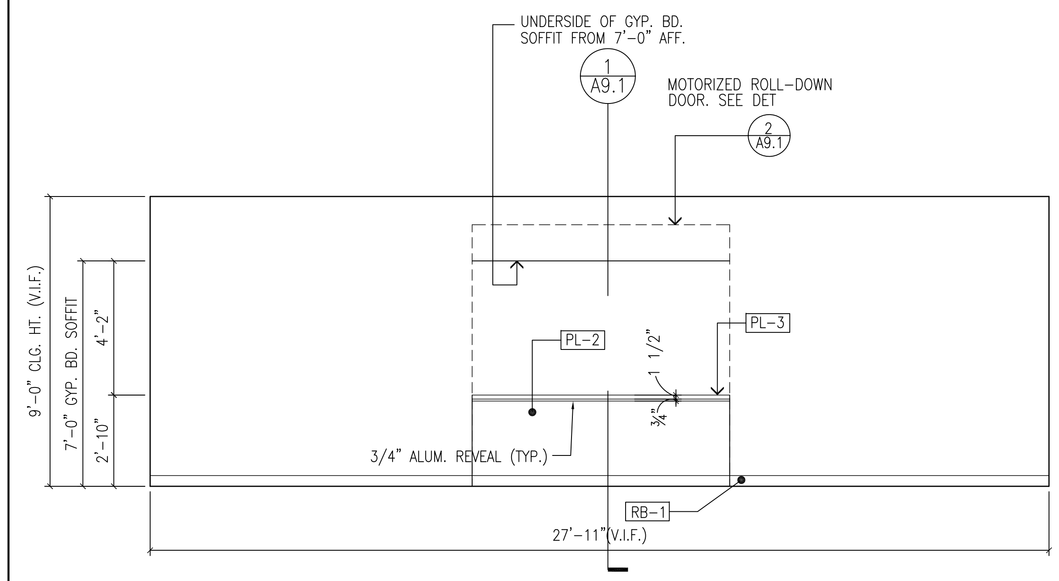

3 LOBBY COUNTER ELEVATION (RM. #110)
SCALE: 3/8" = 1'-0"

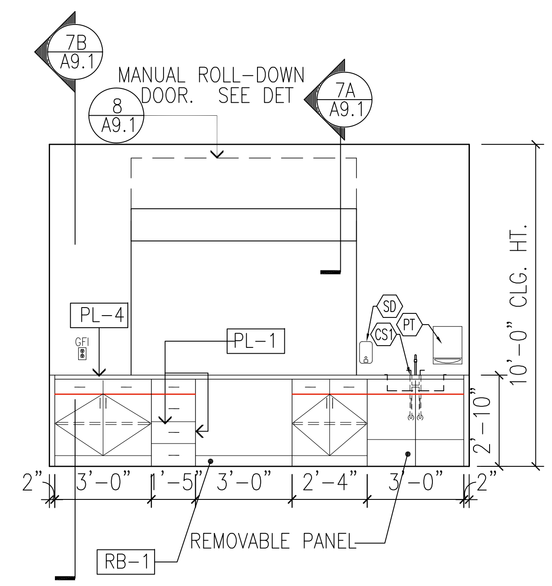

5 BREAK ROOM- ELEVATION (RM. #115A)
SCALE: 3/8" = 1'-0"

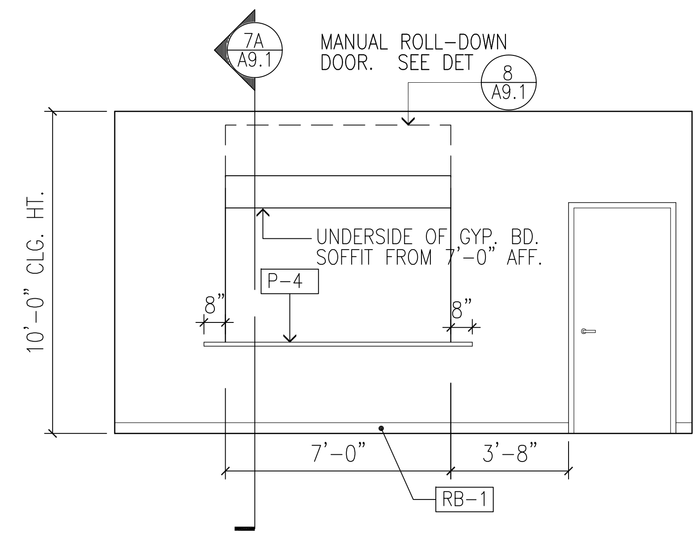

6 MULTI PURPOSE COUNTER - ELEVATION (RM. #115A)
SCALE: 3/8" = 1'-0"

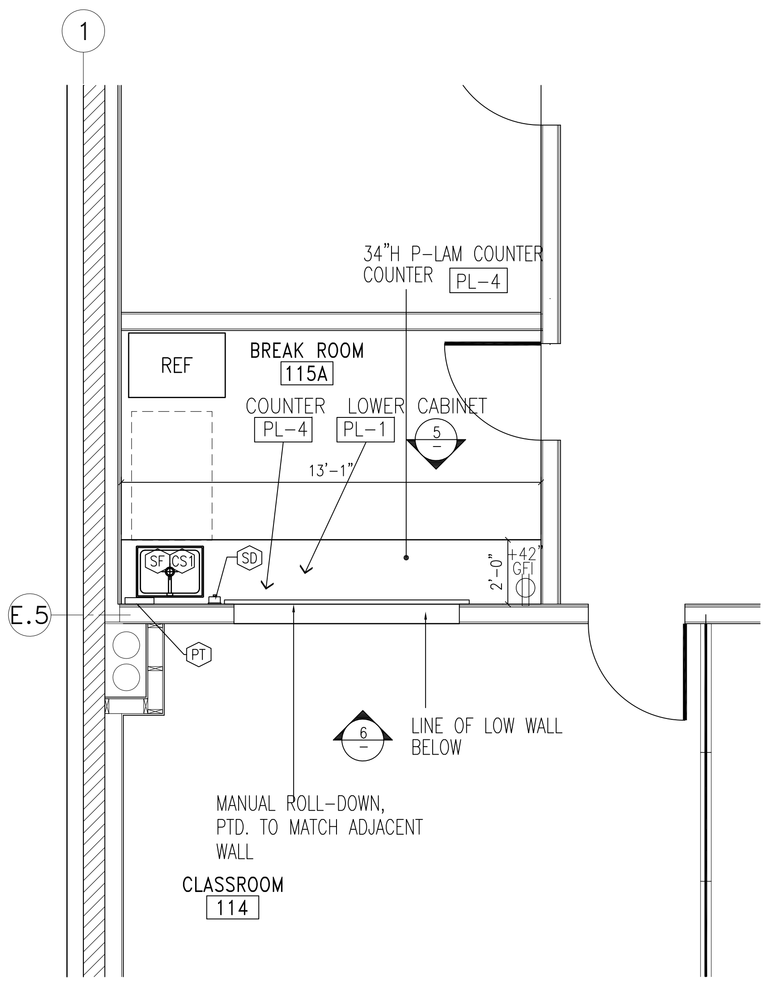

FIXTURE LEGEND

CS1 SINGLE-COMPARTMENT SINK
JUST MANUF., S-ADA-1925-A-GR
SEE PLUMBING PLAN
NOTE: FIXTURE TO BE ADA COMPLIANT WITH A 6 1/2" MAX. BOWL DEPTH

SF SINK FAUCET
JUST MANUF., #J-1174-KS
SEE PLUMBING PLAN

SD SOAP DISPENSER
BOBRICK, WALL MTD., B-2111
NOTES: FIXTURE TO BE MOUNTED PER ADA REQ'MTS.

PT PAPER TOWEL DISPENSER
BOBRICK, WALL MTD., B-4262
NOTES: FIXTURE TO BE MOUNTED PER ADA REQ'MTS.

4 BREAK ROOM- PARTIAL PLAN (RM. #115A)
SCALE: 3/8" = 1'-0"

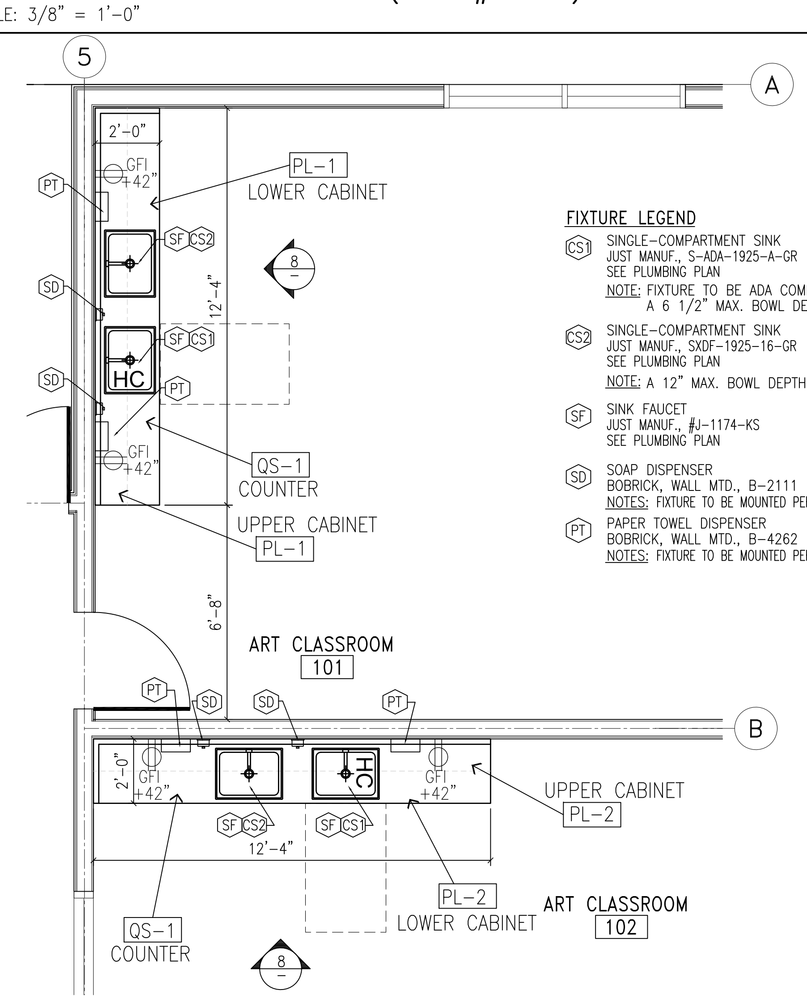

FIXTURE LEGEND

CS1 SINGLE-COMPARTMENT SINK
JUST MANUF., S-ADA-1925-A-GR
SEE PLUMBING PLAN
NOTE: FIXTURE TO BE ADA COMPLIANT WITH A 6 1/2" MAX. BOWL DEPTH

CS2 SINGLE-COMPARTMENT SINK
JUST MANUF., SXDF-1925-16-GR
SEE PLUMBING PLAN
NOTE: A 12" MAX. BOWL DEPTH

SF SINK FAUCET
JUST MANUF., #J-1174-KS
SEE PLUMBING PLAN

SD SOAP DISPENSER
BOBRICK, WALL MTD., B-2111
NOTES: FIXTURE TO BE MOUNTED PER ADA REQ'MTS.

PT PAPER TOWEL DISPENSER
BOBRICK, WALL MTD., B-4262
NOTES: FIXTURE TO BE MOUNTED PER ADA REQ'MTS.

7 ART CLASSROOMS- PARTIAL PLANS (RM. #101, #102)
SCALE: 3/8" = 1'-0"

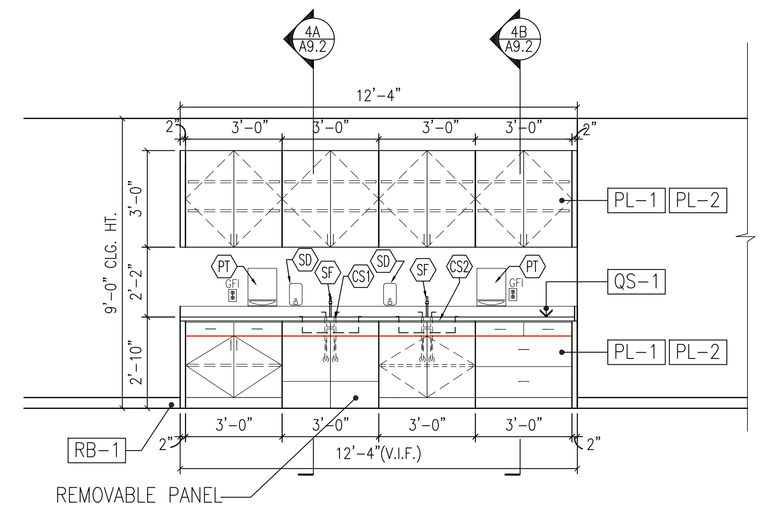

GENERAL NOTES
1. REFER TO "A" FOR ADDITIONAL CONSTRUCTION NOTES.
2. REFER TO "A" FOR FINISH SPECIFICATIONS.
3. ALL CABINET INTERIORS & ADJUSTABLE SHELVES TO BE WHITE MELAMINE U.O.N.
4. FOR ALL DISPENSER INSTALLATION DIMENSION REFER TO 4/A9.0

8 ART CLASSROOMS - ELEVATION (RM. #101, #102)
SCALE: 3/8" = 1'-0"

FRANCO ARCHITECTS INC.
12345 Ventura Blvd. H
Studio City, CA 91604
Tel 818 754-2030
Fax 818 754-2032
Architecture and Planning

MAGNOLIA SCIENCE ACADEMY
18220 SHERMAN WAY, RESEDA, CA91335

REV	DESCRIPTION	DATE
	PLAN CHECK #1	6/14/2017

LICENSED ARCHITECT
JOHANN D. WANG
C27010
4/30/2019
RENEWAL DATE
STATE OF CALIFORNIA

PROJECT
MAGNOLIA SCIENCE ACADEMY

PROJECT ADDRESS
18220 SHERMAN WAY, RESEDA, CA91335

DRAWING TITLE
CABINETWORK DETAILS

DRAWN BY
ISSUE DATE 6/14/2017
JOB NUMBER
DRAWING SCALE AS NOTED
APPROVED BY:

DRAWING NUMBER
A9.0

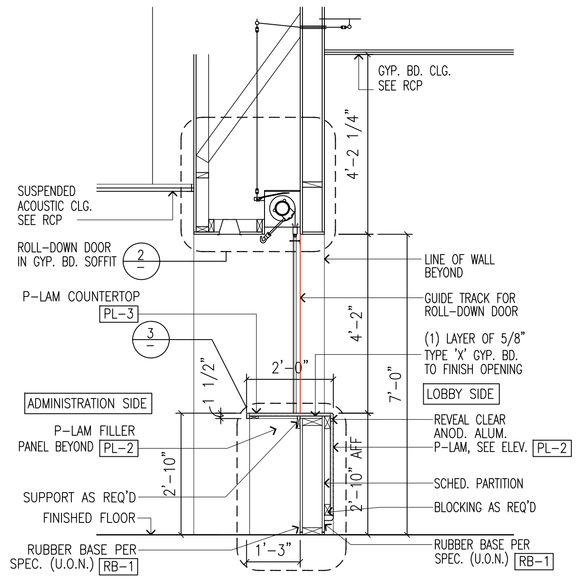

1 SECTION AT RECEPTION COUNTER
SCALE: 1/2" = 1'-0"

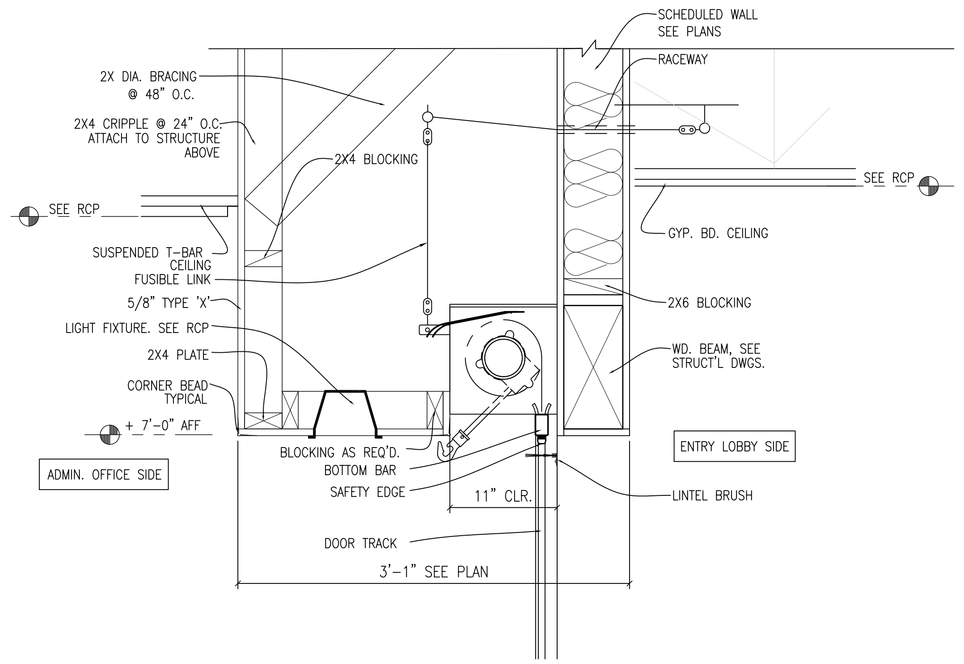

2 MOTORIZED ROLL DOWN DOOR AT LOBBY
SCALE: 1/2" = 1'-0"

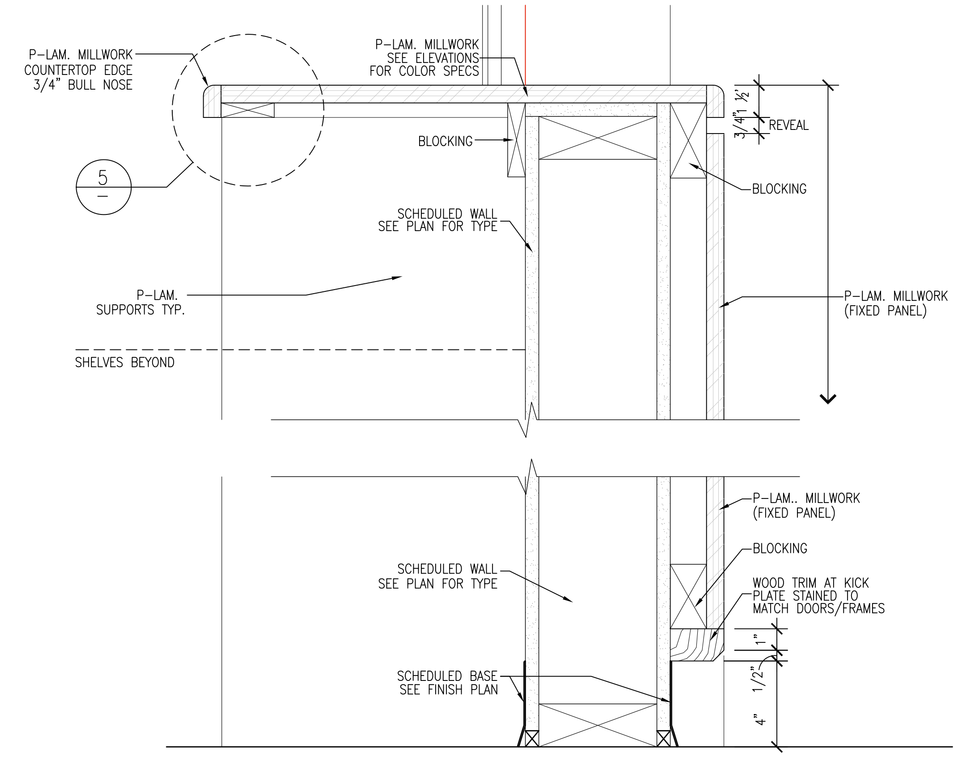

3 ENLARGED SECTION AT RECEPTION COUNTER
SCALE: 3" = 1'-0"

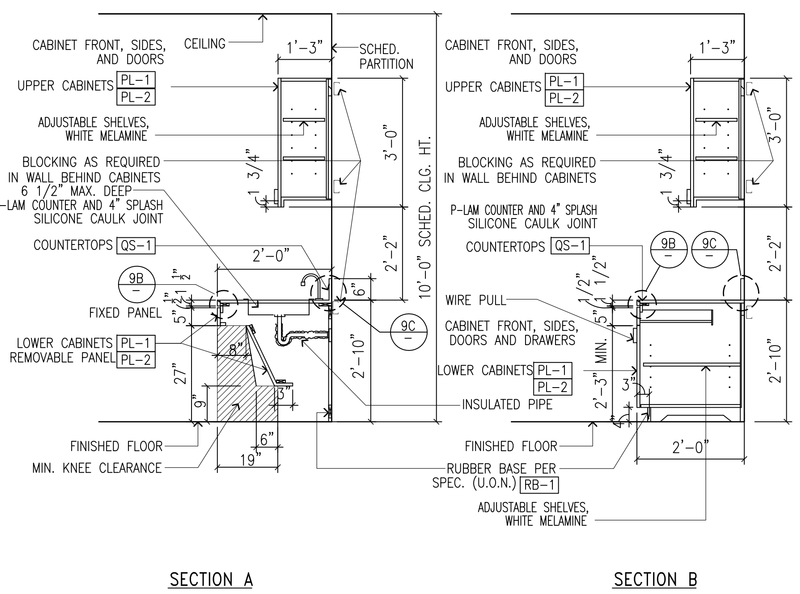

4 MILLWORK SECTIONS
SCALE: 1/2"=1'-0"

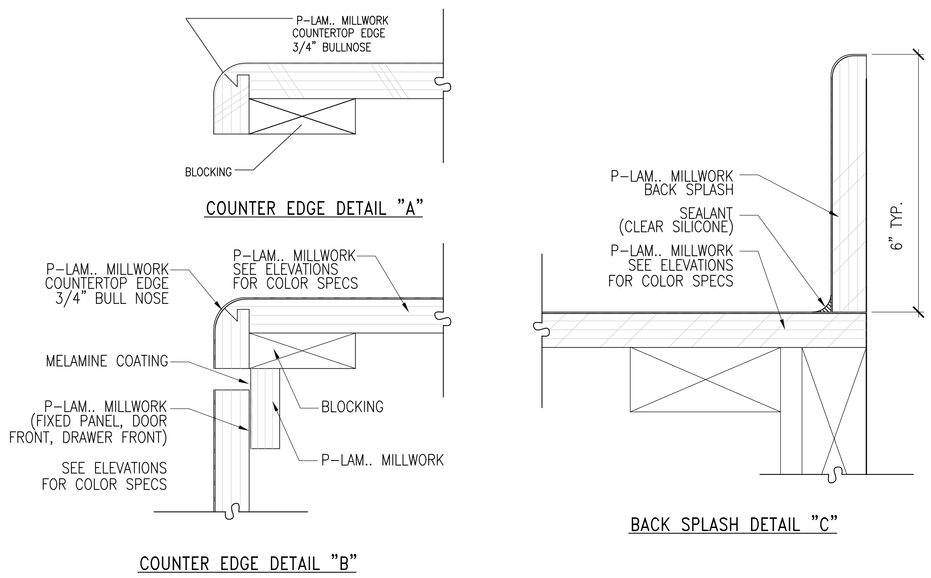

5 COUNTER EDGE & BACK SPLASH DETAILS
SCALE: 6" = 1'-0"

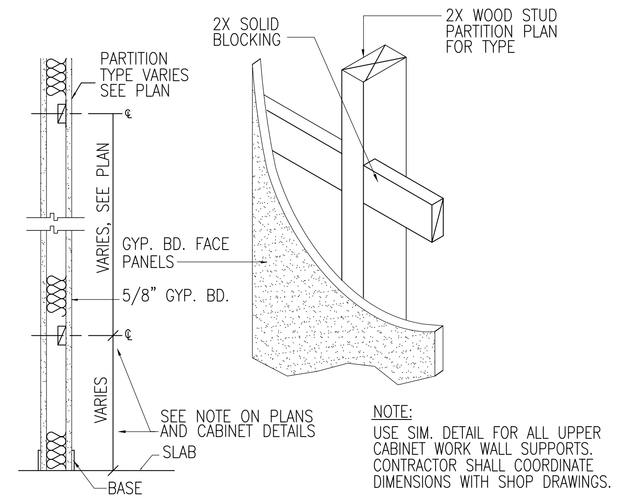

6 HORIZONTAL BACKING
SCALE: NONE

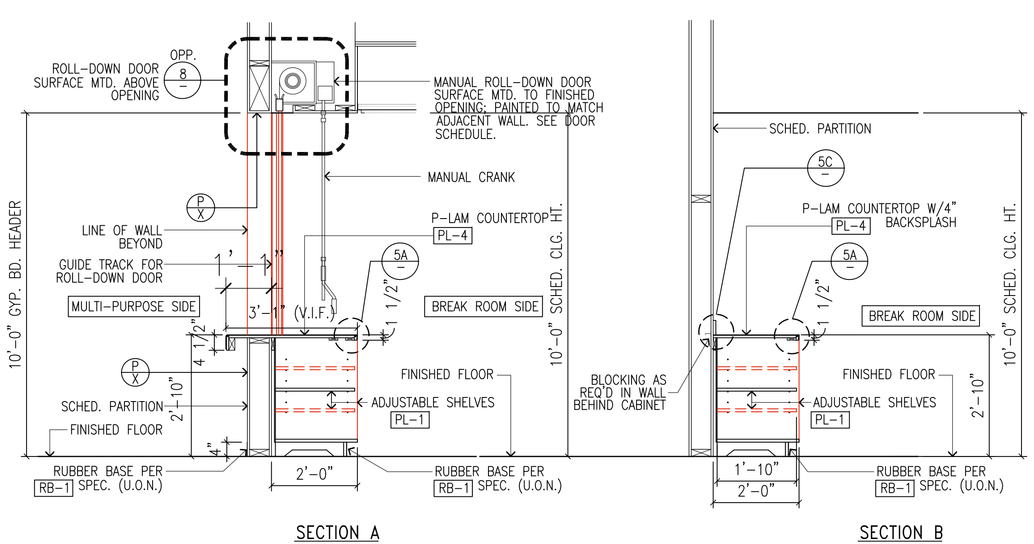

7 MILLWORK SECTIONS
SCALE: 1/2"=1'-0"

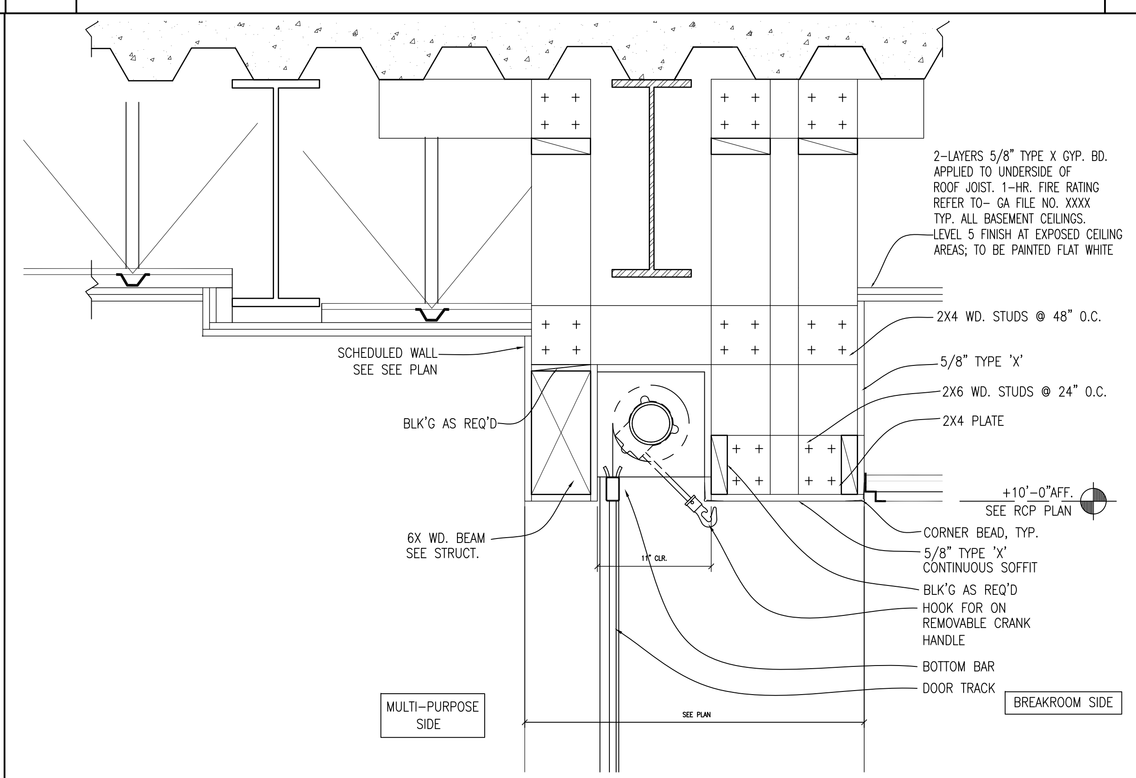

8 FACE MTD. ROLL-UP CNTR. -RATED DOOR- MANUAL
SCALE: 1 1/2"=1'-0"

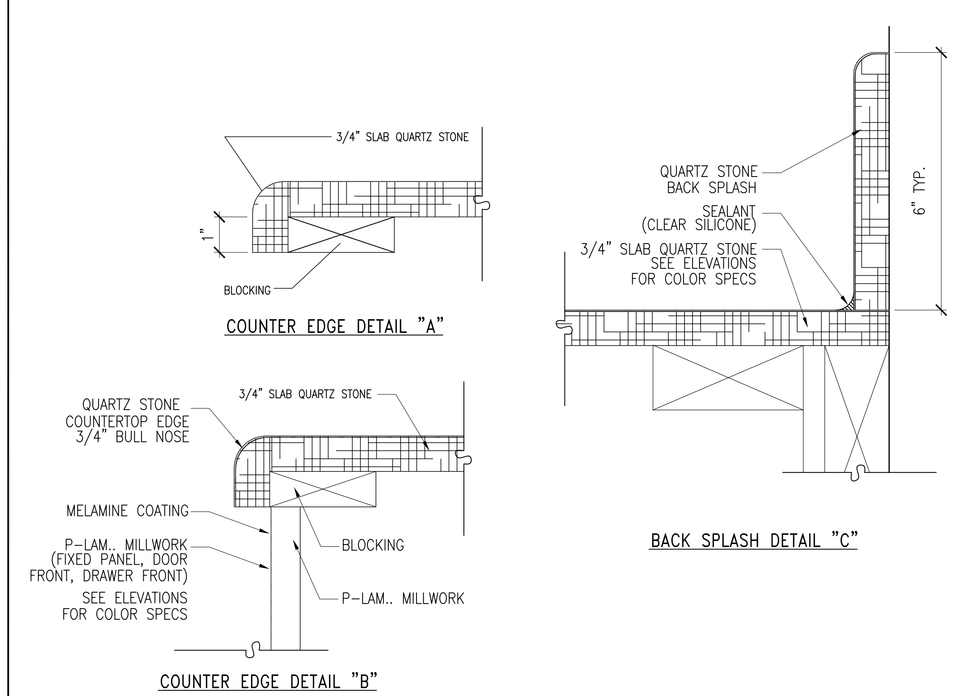

9 QUARTZ STONE COUNTER EDGE & BACK SPLASH DETAILS
SCALE: 6" = 1'-0"

FRANCO ARCHITECTS INC.
12345 Ventura Blvd. H
Studio City, CA 91604
Tel 818 754-2030
Fax 818 754-2032
Architecture and Planning

MAGNOLIA SCIENCE ACADEMY
18220 SHERMAN WAY, RESEDA, CA91335

REV	DESCRIPTION	DATE
	PLAN CHECK #1	6/14/2017

LICENSED ARCHITECT
JOHANN D. WANG
C27010
4/30/2019
RENEWAL DATE
STATE OF CALIFORNIA

PROJECT
MAGNOLIA SCIENCE ACADEMY

PROJECT ADDRESS
18220 SHERMAN WAY,
RESEDA, CA91335

DRAWING TITLE
CABINETWORK DETAILS

DRAWN BY
ISSUE DATE
6/14/2017

JOB NUMBER
DRAWING SCALE
AS NOTED

APPROVED BY:

DRAWING NUMBER
A9.1

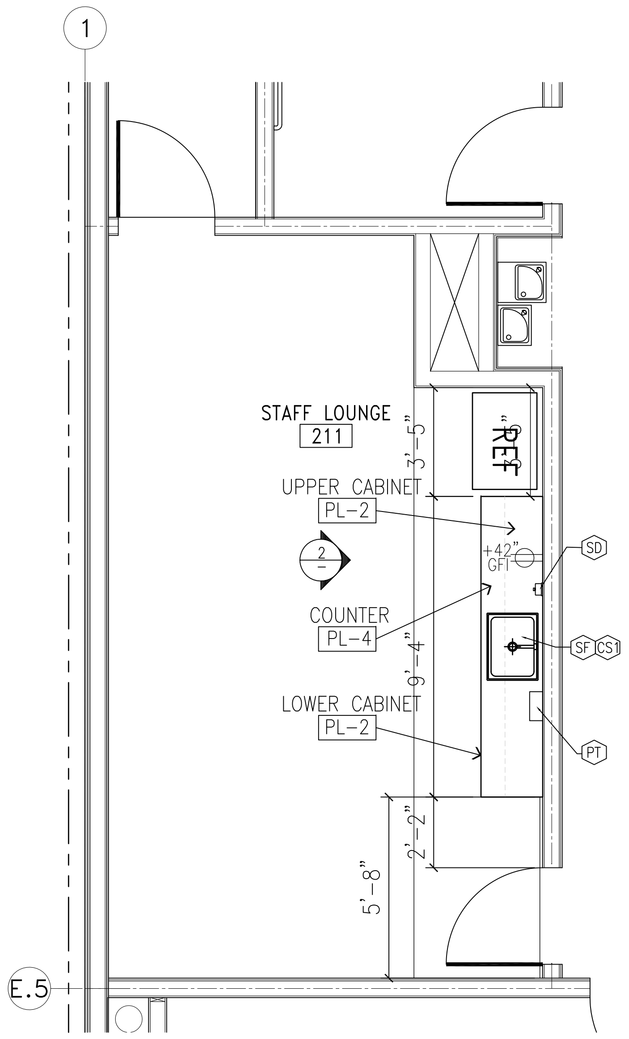

FIXTURE LEGEND

- (CS1) SINGLE-COMPARTMENT SINK
  JUST MANUF., S-ADA-1925-A-GR
  SEE PLUMBING PLAN
  NOTE: FIXTURE TO BE ADA COMPLIANT WITH A 6 1/2" MAX. BOWL DEPTH
- (SF) SINK FAUCET
  JUST MANUF., #U-1174-KS
  SEE PLUMBING PLAN
- (SD) SOAP DISPENSER
  BOBRICK, WALL MTD., B-2111
  NOTES: FIXTURE TO BE MOUNTED PER ADA REQ'MTS.
- (PT) PAPER TOWEL DISPENSER
  BOBRICK, WALL MTD., B-4262
  NOTES: FIXTURE TO BE MOUNTED PER ADA REQ'MTS.

1 STAFF LOUNGE- PARTIAL PLAN (RM. #211)
SCALE: 3/8" = 1'-0"

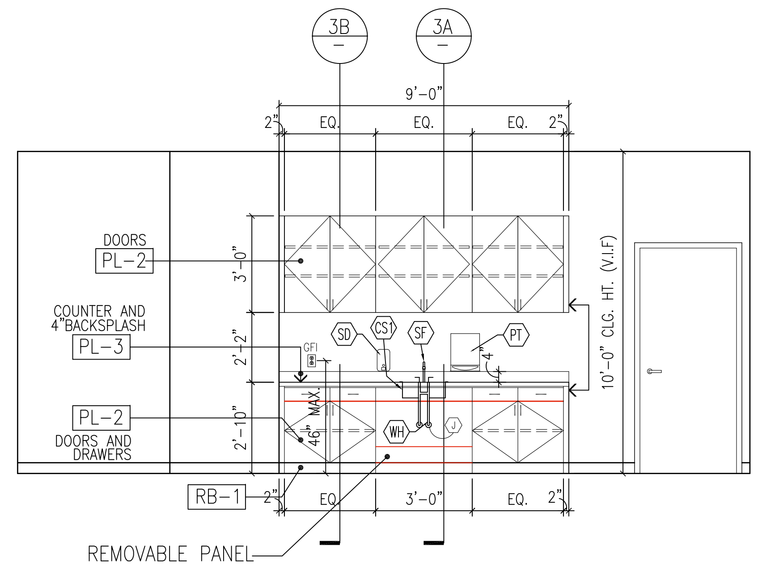

2 STAFF LOUNGE - ELEVATION (RM. #211)
SCALE: 3/8" = 1'-0"

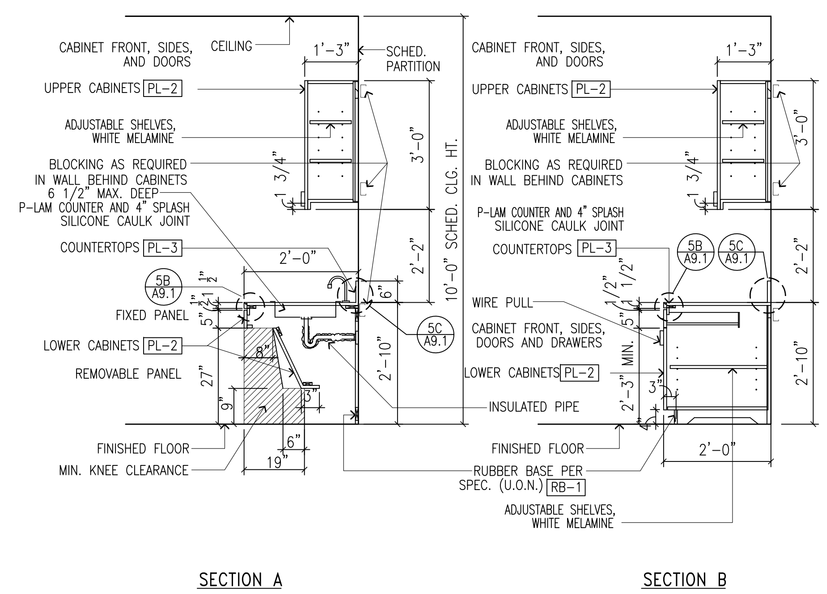

3 MILLWORK SECTIONS
SCALE: 1/2"=1'-0"

FRANCO ARCHITECTS INC.
12345 Ventura Blvd. H
Studio City, CA 91604
Tel 818 754-2030
Fax 818 754-2032
Architecture and Planning

MAGNOLIA SCIENCE ACADEMY
18220 SHERMAN WAY, RESEDA, CA91335

REV	DESCRIPTION	DATE
	PLAN CHECK #1	6/14/2017

LICENSED ARCHITECT
JOHANN D. WANG
C27010
4/30/2019
RENEWAL DATE
STATE OF CALIFORNIA

PROJECT	MAGNOLIA SCIENCE ACADEMY
PROJECT ADDRESS	18220 SHERMAN WAY, RESEDA, CA91335
DRAWING TITLE	CABINETWORK DETAILS
DRAWN BY	ISSUE DATE 6/14/2017
JOB NUMBER	DRAWING SCALE AS NOTED
APPROVED BY:	
DRAWING NUMBER	A9.2

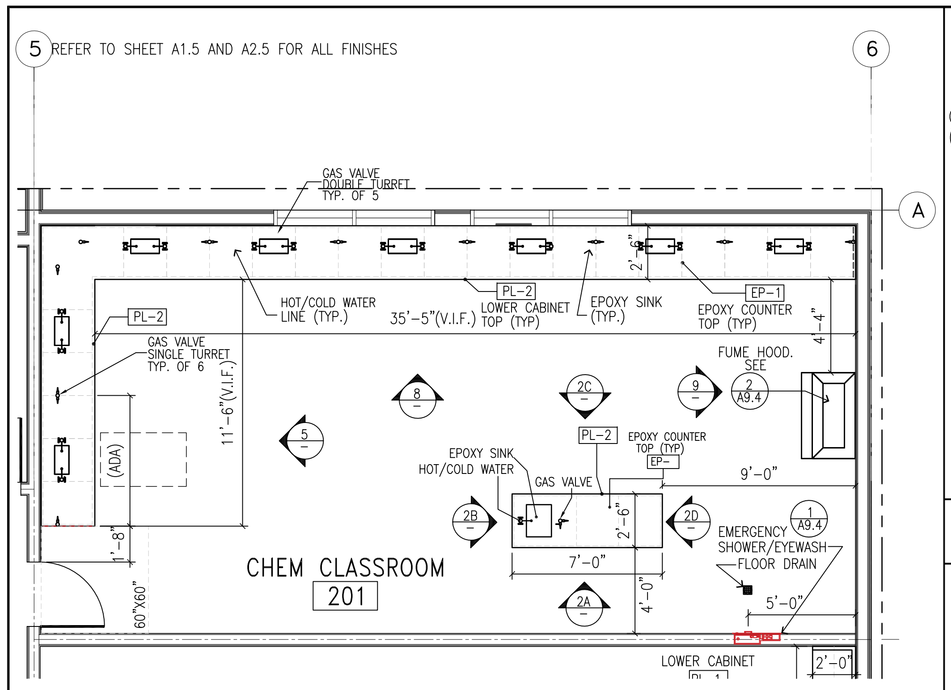

GENERAL NOTES

1. REFER TO "A" FOR ADDITIONAL CONSTRUCTION NOTES.
2. REFER TO "A" FOR FINISH SPECIFICATIONS.
3. ALL CABINET INTERIORS & ADJUSTABLE SHELVES TO BE WHITE MELAMINE U.O.N.
4. FOR ALL DISPENSER INSTALLATION DIMENSION REFER TO 4/A9.0

1 CHEMISTRY LAB PLAN– ROOM #201

SCALE: 1/4"=1'-0"

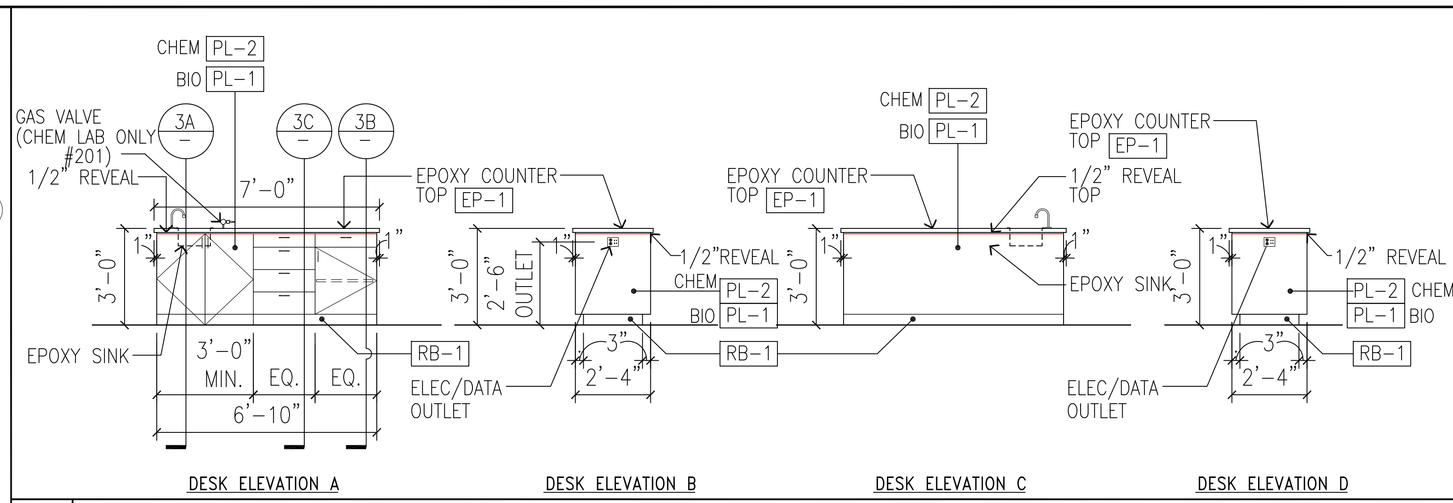

2 TEACHER'S LAB DESK ELEVATIONS

SCALE: 3/8" = 1'-0"

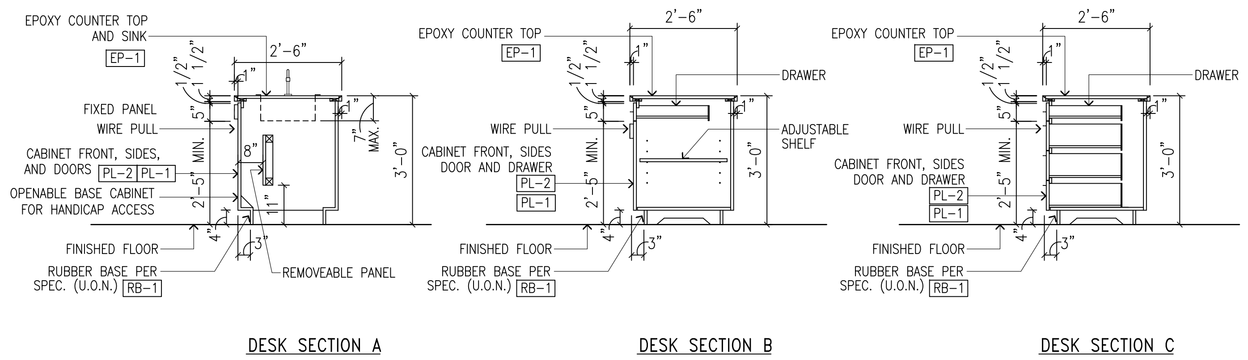

3 TEACHER'S LAB DESK SECTIONS

SCALE: 1/2" = 1'-0"

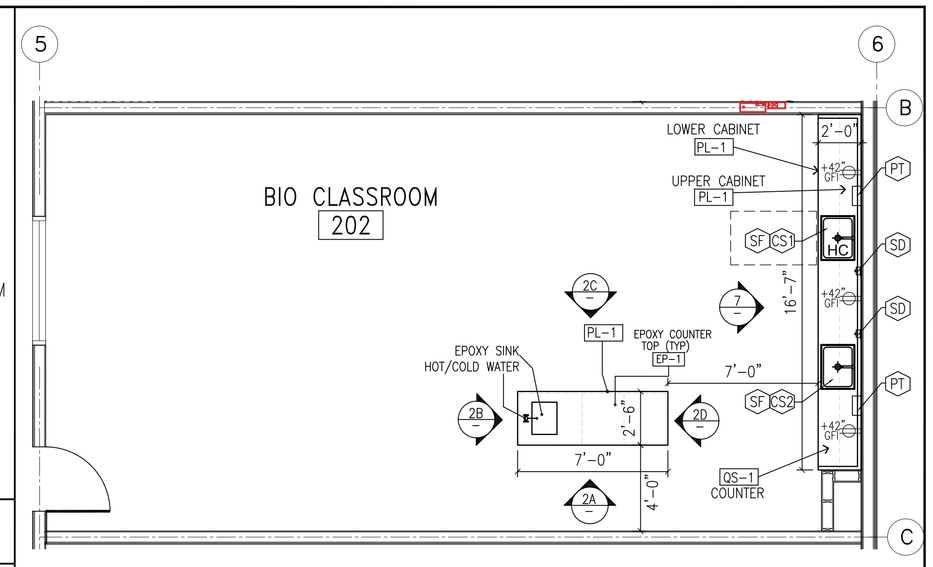

FIXTURE LEGEND

CS1 SINGLE-COMPARTMENT SINK
JUST MANUF., S-ADA-1925-A-GR
SEE PLUMBING PLAN
NOTE: FIXTURE TO BE ADA COMPLIANT WITH A 6 1/2" MAX. BOWL DEPTH

CS2 SINGLE-COMPARTMENT SINK
JUST MANUF., SXDF-1925-16-GR
SEE PLUMBING PLAN
NOTE: A 12" MAX. BOWL DEPTH

SF SINK FAUCET
JUST MANUF., #J-1174-KS
SEE PLUMBING PLAN

SD SOAP DISPENSER
BOBRICK, WALL MTD., B-2111
NOTES: FIXTURE TO BE MOUNTED PER ADA REQ'MTS.

PT PAPER TOWEL DISPENSER
BOBRICK, WALL MTD., B-4262
NOTES: FIXTURE TO BE MOUNTED PER ADA REQ'MTS.

GENERAL NOTES

1. REFER TO "A" FOR ADDITIONAL CONSTRUCTION NOTES.
2. REFER TO "A" FOR FINISH SPECIFICATIONS.
3. ALL CABINET INTERIORS & ADJUSTABLE SHELVES TO BE WHITE MELAMINE U.O.N.
4. FOR ALL DISPENSER INSTALLATION DIMENSION REFER TO 4/A9.0

4 BIOLOGY LAB PLAN– ROOM #202

SCALE: 1/4" = 1'-0"

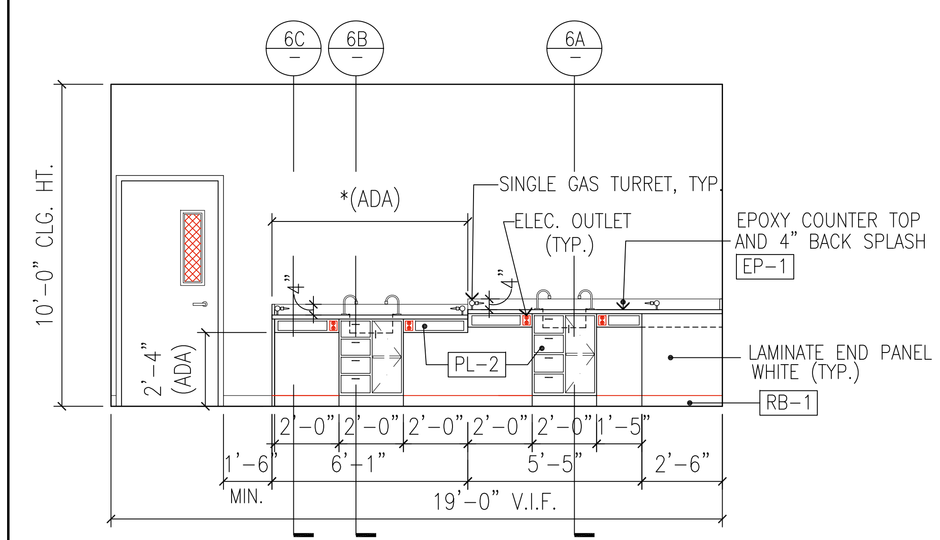

*NOTE: NO ITEMS ARE TO BE PLACED ON THE WALL, NOR RETRIEVED FROM THE WALL AT ADA COUNTER. (FIG.11B-5C)

5 CHEMISTRY LAB DESKS ELEVATION

SCALE: 3/8"=1'-0"

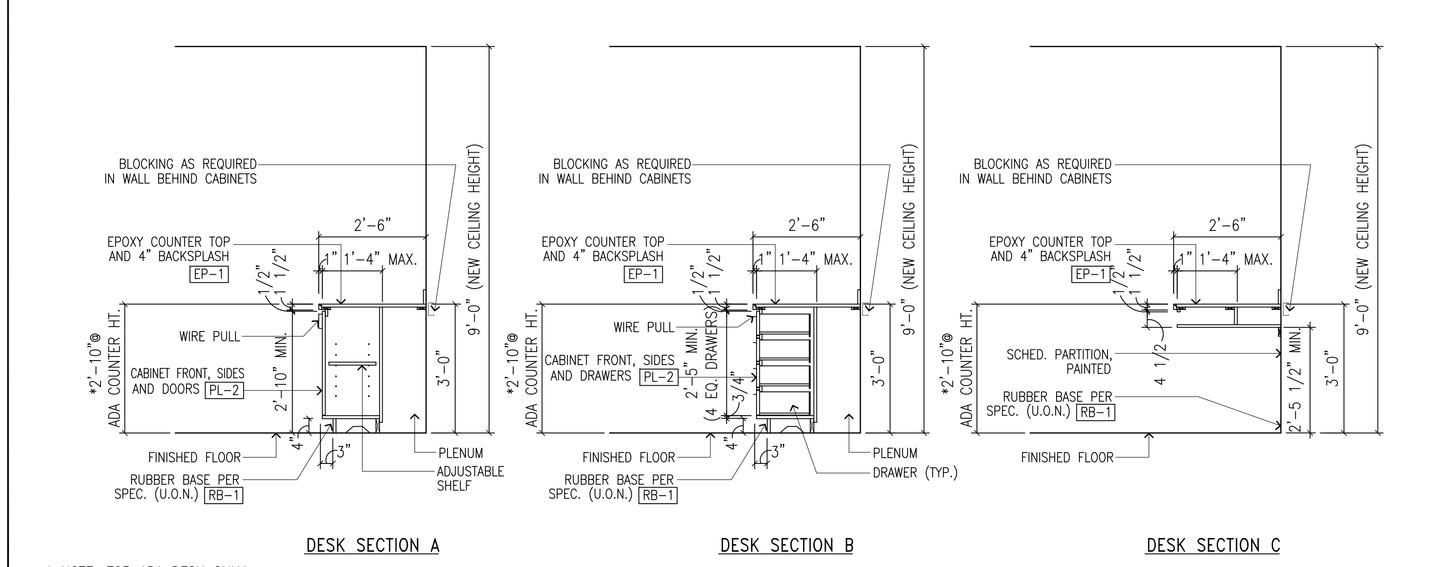

* NOTE: FOR ADA DESK ONLY

6 CHEMISTRY DESKS SECTIONS

SCALE: 1/2" = 1'-0"

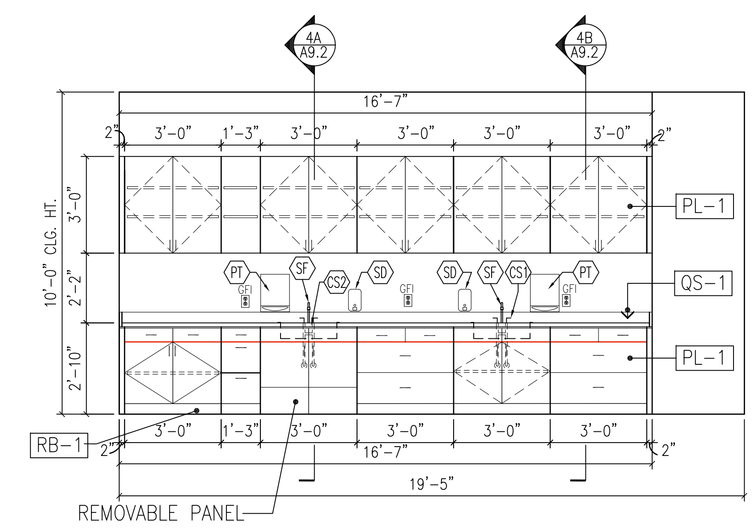

7 BIO LAB COUNTER ELEVATION– ROOM#202

SCALE: 3/8" = 1'-0"

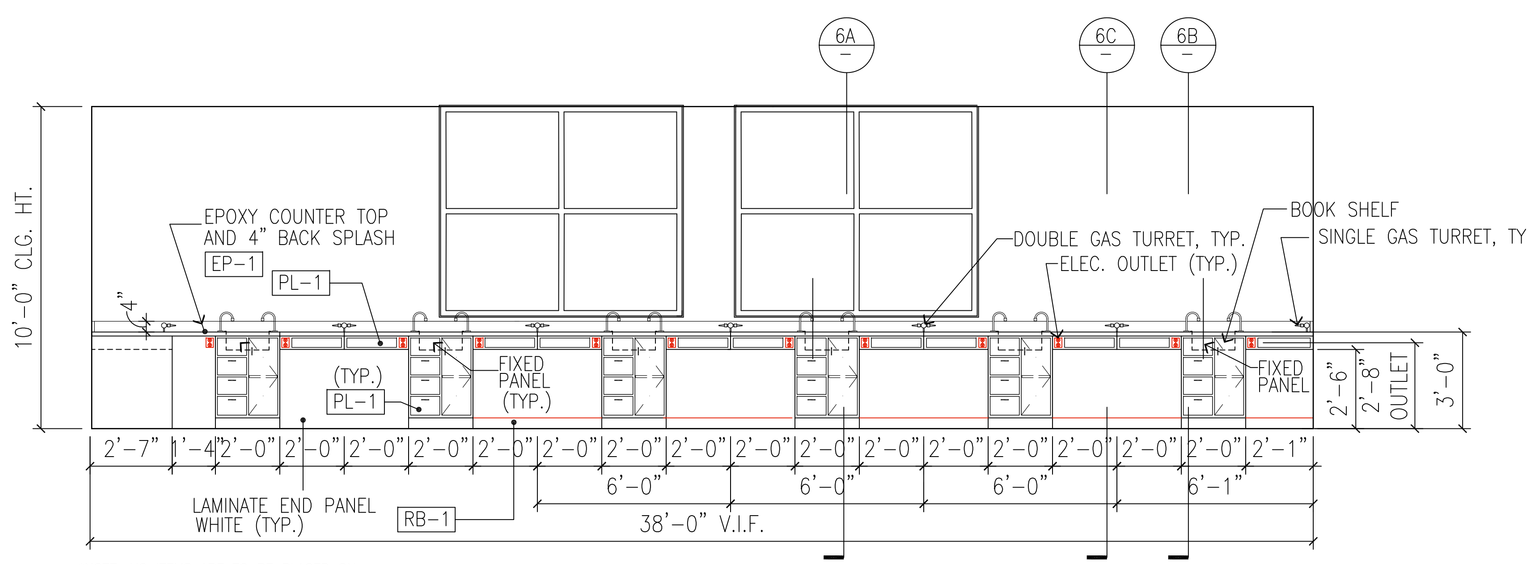

*NOTE: NO ITEMS ARE TO BE PLACED ON THE WALL, NOR RETRIEVED FROM THE WALL AT ADA COUNTER. (FIG.11B-5C)

8 CHEM LAB DESKS ELEVATION

SCALE: 3/8"=1'-0"

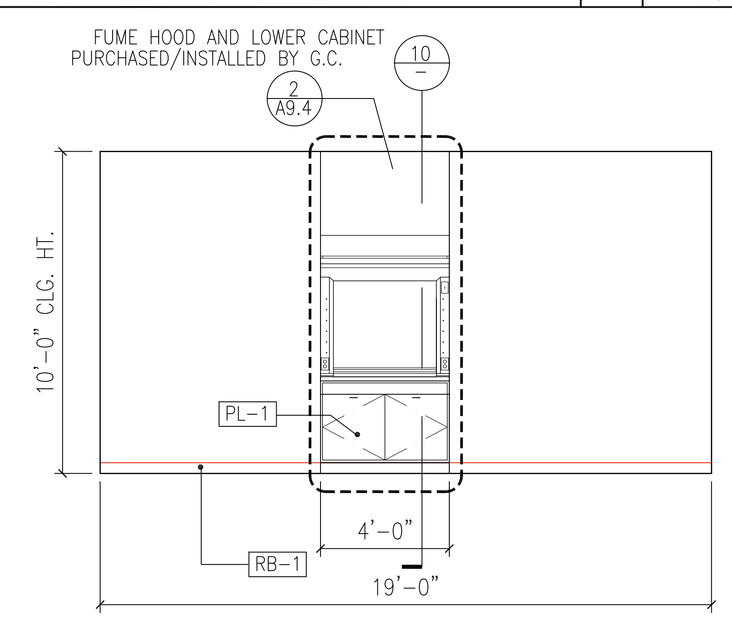

9 CHEMISTRY LAB FUME HOOD ELEVATION

SCALE: 3/8"=1'-0"

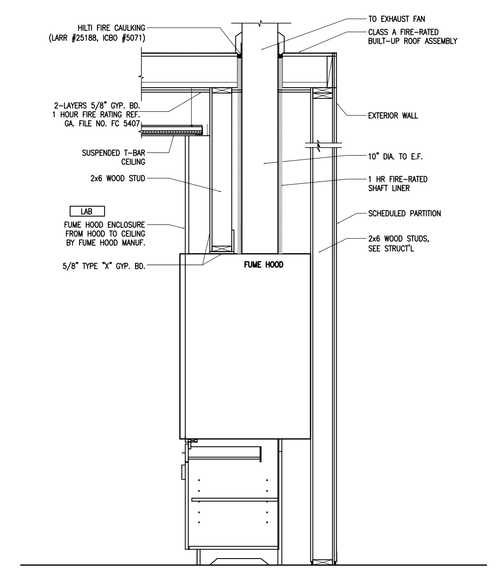

10 FUME HOOD SECTION

SCALE: 1/2"=1'-0"

FRANCO ARCHITECTS INC.
12345 Ventura Blvd. H
Studio City, CA 91604
Tel 818 754-2030
Fax 818 754-2032
Architecture and Planning

MAGNOLIA SCIENCE ACADEMY
18220 SHERMAN WAY, RESEDA, CA91335

REV	DESCRIPTION	DATE
	PLAN CHECK #1	6/14/2017

LICENSED ARCHITECT JOHANN D. WANGT C27010 4/30/2019 RENEWAL DATE STATE OF CALIFORNIA

PROJECT
MAGNOLIA SCIENCE ACADEMY

PROJECT ADDRESS
18220 SHERMAN WAY, RESEDA, CA91335

DRAWING TITLE
CABINETWORK DETAILS

DRAWN BY
ISSUE DATE 6/14/2017
JOB NUMBER
DRAWING SCALE AS NOTED
APPROVED BY

DRAWING NUMBER
A9.3

Bradley S19-325BF ⟵
Barrier-Free Recessed Drench Shower and Eye/Face Wash

- Complies with American National Standard Z358.1-2004
- Shower Activation Handle is Fully Recessed
- Sturdy One-Piece Cabinet for Quick and Easy Installation
- Full, One-Year Warranty
- Patent Pending

CERTIFIED MODEL Z358.1-2004

Specifications

Barrier-free design makes this shower and eyewash fully accessible to people with physical disabilities. Unit is flush-mounted into the wall. This unit is designed to accommodate areas where space considerations are a concern. Such areas may include, but are not limited to, laboratories, hospitals, and schools. Shower activation handle does not break the plane of the wall. This ensures no obstructions protrude from the wall. Shower valve activates when handle is pushed downward. No tight pinching or grazoing is required. Showerhead is designed for varying water supply pressures of 30–90 PSI ensures a minimum flow of 20 GPM for ANSI compliance. Eyewash operates by pulling cabinet door down. Water is collected by the door assembly and directed back into the wall for drainage. Eyewash has an integral flow control in the shank.

Installation

A rough wall opening of 25-5/8"W x 32-1/8"H x 4"D is required. Frame is integral to the unit. Secure unit to framing with screws (supplied by installer) at the holes provided.

Standard Equipment

Cabinet and Door
Stainless Steel, Hinged locked door conceals stop valve, tailpiece and eye/face wash fittings.

SpinTec™ Showerhead
3.1" (78.7mm) diameter highly visible yellow impact-resistant plastic with optional 10-3/4" (273mm) diameter corrosion-resistant stainless steel shroud.

Shower Valve
Chrome-plated brass 1" NPT stay-open ball valve. Hand operated by a black powder-coated stainless steel handle when pushed downward.

Eye/Face Wash Valve
Chrome-plated brass 1/2" NPT stay-open ball valve. Water flow is activated by pulling the door cowm 90 degrees with supplied handle. Water will continue to flow until door is returned to its original position.

Eye/Face Wash Sprayhead Assembly
Chrome-plated brass sprayhead assembly with twin soft-flow eyewash heads and protective sprayhead covers. Safe, steady water flow under varying water supply conditions from 30–90 PSI is assured by integral flow control in the sprayhead assembly. NOTE: The ANSI Z358.1 standard requires an uninterruptable supply of flushing fluid at a minimum 30 PSI flowing pressure.

Pipe and Fittings
1" copper piping, brass and chrome-plated fittings. Piping is supplied by others.

Water Supply
1" NPT for drench shower, 1/2" NPT for eyewash.

Eyewash Waste
1-1/4" drain is provided with tailpiece (models S19-325BF and S19-325FBF) or optional P-trap (models S19-325PBF and S19-325FPBF).

☑ A 4" floor drain is recommended for drench shower waste (supplied by others).

Recommended Option:
Navigator S19-2100 EF/25-
Emergency Thermostatic Mixing Valve
NAVIGATOR
Satisfies ANSI Z358.1-2004
tepid water requirements.

Models S19-325BF and S19-325FBF are shown mounted in a wall. Water supply provided by others.

Emergency Fixtures
Document No. 4115
Page 1 of 3
This information is subject to change without formal notice.
9/29/08

© 2008 Bradley Corporation
P.O. Box 309, Menomonee Falls, WI 53052-0309
Phone: 800.BRADLEY (800.272.3539) Fax: 262.253.4161
bradleycorp.com

Bradley S19-325BF ⟵
Barrier-Free Recessed Drench Shower and Eye/Face Wash

Model	Description
☑ 319-325BF	Barrier-Free Recessed Drench Shower and Eye/Face Wash with Recessed Shower Handle. **Extended Showerhead and Tailpiece**
☐ S19-325FBF	Barrier-Free Recessed Drench Shower and Eye/Face Wash with Recessed Shower Handle. **Flush-Mounted Showerhead and Tailpiece**
☐ S19-325PBF	Barrier-Free Recessed Drench Shower and Eye/Face Wash with Recessed Shower Handle. **Extended Showerhead and P-trap**
☐ S19-325FPBF	Barrier-Free Recessed Drench Shower and Eye/Face Wash with Recessed Shower Handle. **Flush-Mounted Showerhead and P-trap**
☐ S19-2100	Navigator EF/25 – Emergency Thermostatic Mixing Valve.

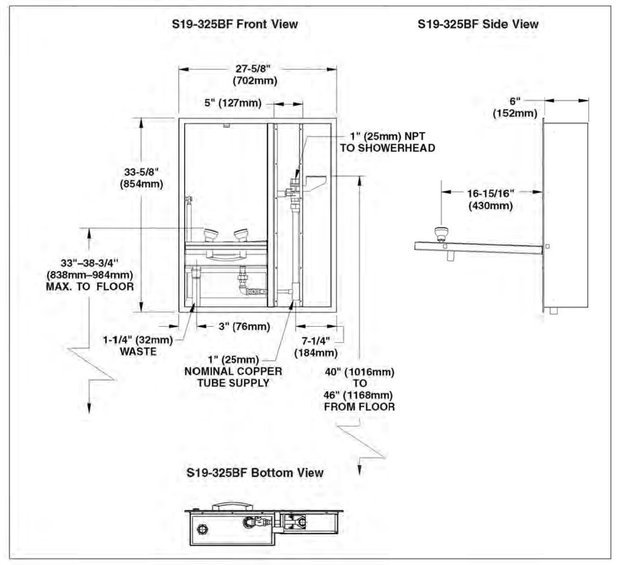

Bradley S19-325BF ⟵
Barrier-Free Recessed Drench Shower and Eye/Face Wash

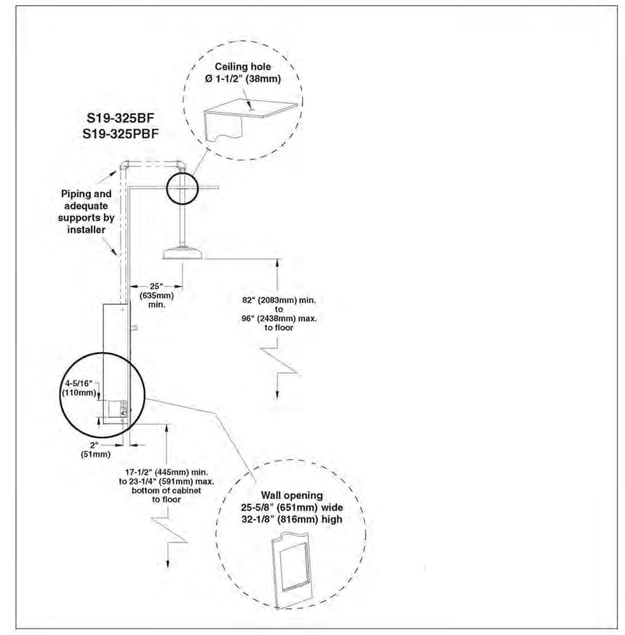

1 BARRIER-FREE RECESSED DRENCH SHOWER AND EYE/FACE WASH FIXTURE
SCALE: N.T.S.

qdp QUICK DELIVERY PROGRAM

isec Integrity and innovation Right down to the finish.

FUME HOOD – SUPERSTRUCTURES

Dimensions:End View

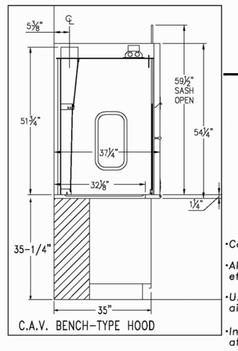

C.A.V. BENCH-TYPE HOOD

C.A.V. Bench-Type Hood	
Width	Product Number
48"	61L2589P0BX
60"	61L2592P0BX
72"	61L2595P0BX
96"	61L2598P0BX

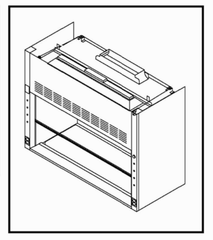

- Constant Air Volume Bench-Type Superstructure
- All hoods are tested according to ASHRAE 110-95, and have a capture efficiency rating safer than ACGIH recommendations.
- U.L. 1805 compliant, covering electrical, mechanical, flammability and airflow characteristics.
- Incorporates a double bypass to maintain a constant exhaust volume at all sash positions
- Designed to permit exact balancing of room ventilating system with hood exhaust volume
- Field convertible to variable air volume or auxiliary air type hood
- Side-wall access panels with PVC gasket.
- Pre-wired with two tube fluorescent light fixture, light switch, and two duplex 120-volt AC receptacles
- Full-view, laminated safety glass vertical sash; full width recessed pull; gravity-actuated sash stop at 18" height, with override capability
- Plugged holes (for future service installation)(4) on LH post; (4) on RH post

White Polyresin:
Interior liner surfaces and baffles are made of white polyresin, a press molded, heat-converted catalyzed glass polyester sheet. This sheet has a working temperature of 160°C, is flame retardant and is self extinguishing. The sheet has excellent physical and non-corrosion qualities and is white in color throughout the material's 1/4" thickness. This material is premium quality and should be used in high-abuse areas.

CFM (Cubic Feet/Minute) and SP (Static Pressure) for QDP Hoods

Constant Air Volume Bench-Type Hood						
			100 FPM * 28 1/2" Sash Opening		100 FPM * 18" Sash Opening	
Product Number	Hood Size	Collar Size	CFM*	SP*	CFM	SP
61L2589P0BX	48"	6" x 15"	760	.18	485	.09
61L2592P0BX	60"	6" x 23"	1000	.18	660	.09
61L2595P0BX	72"	6" x 23"	1250	.27	785	.13
61L2598P0BX	96"	6" x 30"	1710	.26	1081	.09

* 28 1/2" openings are for setup only; Operating position is an 18" opening.

See Fisher Hamilton's fume hood catalog for face velocity recommendations

Fume Hood Ceiling Enclosure	
Size	Product Number
48"x24 1/2"x37 1/4"	61L0482437
61"x24 1/2"x37 1/4"	61L0602437
72"x24 1/2"x37 1/4"	61L0722437
96"x24 1/2"x37 1/4"	61L0962437

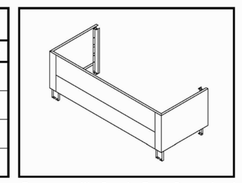

- For use with Bench-Type Superstructures
- Provides finished appearance from hood to ceiling
- Conceals and protects hood ductwork, electrical conduit, and vertical service line
- Finished to match superstructure
- Can be cut in field for ceiling as low as 8 feet

Dimensions:End View

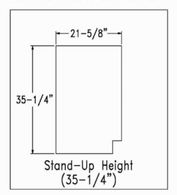

Series 121 Cupboard Unit	
Width	Product Number
36"	121S6320
48"	121S8320

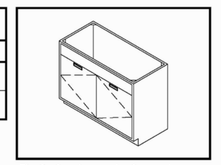

- Flush front panel above doors
- Cupboard with solid hinged doors
- Back with access panel

2 FUME HOOD EQUIPMENT
SCALE: N.T.S.

FRANCO ARCHITECTS INC.
12345 Ventura Blvd. H
Studio City, CA 91604
Tel 818 754-2030
Fax 818 754-2032
Architecture and Planning

MAGNOLIA SCIENCE ACADEMY
18220 SHERMAN WAY, RESEDA, CA91335

REV	DESCRIPTION	DATE
	PLAN CHECK #1	6/14/2017

LICENSED ARCHITECT
JOHANN D. WANG
C27010
4/30/2019
RENEWAL DATE
STATE OF CALIFORNIA

PROJECT
MAGNOLIA SCIENCE ACADEMY

PROJECT ADDRESS
18220 SHERMAN WAY, RESEDA, CA91335

DRAWING TITLE
LAB EQUIPMENT SPEC-SHEETS

DRAWN BY
ISSUE DATE 6/14/2017
JOB NUMBER
DRAWING SCALE AS NOTED
APPROVED BY:

DRAWING NUMBER
A9.4

DOOR SCHEDULE 7

E- EXCISING
N- NEW

DOOR NO.	DOOR TYPE	DOOR WIDTH	DOOR HEIGHT	DOOR RATING	DOOR MATERIAL	DOOR FINISH	FRAME MANU.	FRAME RATING	FRAME MATERIAL	FRAME FINISH	HDWR GRP	ACCESSIBLE THRESHOLD PER DET.	REMARKS
100	B	6'-0"	7'-0"	NONE	ALUMINUM	COLOR: CLEAR ANODIZED ALUMINUM	KAWNEER	NONE	ALUMINUM	DARK BRONZE #40	1		PANIC HARDWARE
101	G	3'-0"	7'-0"	20 MIN.	S.C. WOOD	FAC. STAIN MAPLE; CLEAR FINISH	TIMELY	NONE	METAL	TO MATCH DARK BRONZE	3		
102	G	3'-0"	7'-0"	20 MIN.	S.C. WOOD	FAC. STAIN MAPLE; CLEAR FINISH	TIMELY	NONE	METAL	TO MATCH DARK BRONZE	3		
103	G	3'-0"	7'-0"	20 MIN.	S.C. WOOD	FAC. STAIN MAPLE; CLEAR FINISH	TIMELY	NONE	METAL	TO MATCH DARK BRONZE	3		
104	G	3'-0"	7'-0"	20 MIN.	S.C. WOOD	FAC. STAIN MAPLE; CLEAR FINISH	TIMELY	NONE	METAL	TO MATCH DARK BRONZE	3		
105	H	3'-0"	7'-0"	NONE	S.C. WOOD	FAC. STAIN MAPLE; CLEAR FINISH	TIMELY	NONE	METAL	TO MATCH DARK BRONZE	2		
106	H	3'-0"	7'-0"	NONE	S.C. WOOD	FAC. STAIN MAPLE; CLEAR FINISH	TIMELY	NONE	METAL	TO MATCH DARK BRONZE	2		
107	H	3'-0"	7'-0"	NONE	S.C. WOOD	FAC. STAIN MAPLE; CLEAR FINISH	TIMELY	NONE	METAL	TO MATCH DARK BRONZE	2		
108	H	3'-0"	7'-0"	NONE	S.C. WOOD	FAC. STAIN MAPLE; CLEAR FINISH	TIMELY	NONE	METAL	TO MATCH DARK BRONZE	2		
109	G	3'-0"	7'-0"	20 MIN.	S.C. WOOD	FAC. STAIN MAPLE; CLEAR FINISH	TIMELY	NONE	METAL	TO MATCH DARK BRONZE	3		
109A	N	9'-0"	4'-2"	45 MIN.	S.C. WOOD	FAC. STAIN MAPLE; CLEAR FINISH	COOKSON	45 MIN.	STEEL	COLORCOTE	–		FIRE-RATED MOTORIZED ROLL-UP DOOR; INSTALL FEATHER EDGE SAFETY DEVICE;
110	A	10'-0"	10'-0"	NONE	ALUMINUM	COLOR: CLEAR ANODIZED ALUMINUM	KAWNEER	NONE	ALUMINUM	DARK BRONZE #40	1		PANIC HARDWARE
110A	C	6'-0"	7'-0"	NONE	ALUMINUM	COLOR: CLEAR ANODIZED ALUMINUM	KAWNEER	NONE	ALUMINUM	DARK BRONZE #40	1		PANIC HARDWARE
111	E1	3'-0"	7'-0"	60 MIN.	HM	PAINTED, COLOR TBD	STEELCRAFT	60 MIN.	METAL	TO MATCH DARK BRONZE	1B		PANIC HARDWARE, NO LOCKING DEVICE
112	G	3'-0"	7'-0"	20 MIN.	S.C. WOOD	FAC. STAIN MAPLE; CLEAR FINISH	TIMELY	NONE	METAL	TO MATCH DARK BRONZE	3		
113	G	3'-0"	7'-0"	20 MIN.	S.C. WOOD	FAC. STAIN MAPLE; CLEAR FINISH	TIMELY	NONE	METAL	TO MATCH DARK BRONZE	3		
114	G	3'-0"	7'-0"	20 MIN.	S.C. WOOD	FAC. STAIN MAPLE; CLEAR FINISH	TIMELY	NONE	METAL	TO MATCH DARK BRONZE	3		
115	N	9'-0"	4'-2"	NONE	S.C. WOOD	FAC. STAIN MAPLE; CLEAR FINISH	COOKSON	NONE	STEEL	COLORCOTE	–		NON-RATED MOTORIZED ROLL-UP DOOR; INSTALL FEATHER EDGE SAFETY DEVICE;
115A	H	3'-0"	7'-0"	NONE	S.C. WOOD	FAC. STAIN MAPLE; CLEAR FINISH	TIMELY	NONE	METAL	TO MATCH DARK BRONZE	2		
115B	D	3'-0"	7'-0"	45 MIN.	HOLLOW METAL	PAINTED – COLOR TBD	STEELCRAFT	45 MIN.	METAL	TO MATCH DARK BRONZE	3		ELECTRICAL ROOM
116	H	3'-0"	7'-0"	NONE	S.C. WOOD	FAC. STAIN MAPLE; CLEAR FINISH	TIMELY	NONE	METAL	TO MATCH DARK BRONZE	4A		
117	H	3'-0"	7'-0"	NONE	S.C. WOOD	FAC. STAIN MAPLE; CLEAR FINISH	TIMELY	NONE	METAL	TO MATCH DARK BRONZE	4A		
118	H	3'-0"	7'-0"	NONE	S.C. WOOD	FAC. STAIN MAPLE; CLEAR FINISH	TIMELY	NONE	METAL	TO MATCH DARK BRONZE	2		MDF ROOM
119	G	3'-0"	7'-0"	20 MIN.	S.C. WOOD	FAC. STAIN MAPLE; CLEAR FINISH	TIMELY	NONE	METAL	TO MATCH DARK BRONZE	3		
120	G	3'-0"	7'-0"	20 MIN.	S.C. WOOD	FAC. STAIN MAPLE; CLEAR FINISH	TIMELY	NONE	METAL	TO MATCH DARK BRONZE	3		
121	E1	3'-0"	7'-0"	60 MIN.	HM	PAINTED, COLOR TBD	STEELCRAFT	60 MIN.	METAL	TO MATCH DARK BRONZE	1B		PANIC HARDWARE, NO LOCKING DEVICE
122	G	3'-0"	7'-0"	20 MIN.	S.C. WOOD	FAC. STAIN MAPLE; CLEAR FINISH	TIMELY	NONE	METAL	TO MATCH DARK BRONZE	3		
123	H	3'-0"	7'-0"	NONE	S.C. WOOD	FAC. STAIN MAPLE; CLEAR FINISH	TIMELY	NONE	METAL	TO MATCH DARK BRONZE	4		
124	H	3'-0"	7'-0"	NONE	S.C. WOOD	FAC. STAIN MAPLE; CLEAR FINISH	TIMELY	NONE	METAL	TO MATCH DARK BRONZE	5		
125	H	3'-0"	7'-0"	NONE	S.C. WOOD	FAC. STAIN MAPLE; CLEAR FINISH	TIMELY	NONE	METAL	TO MATCH DARK BRONZE	4		
126	F	3'-6"	7'-0"	60 MIN.	HM	PAINTED, COLOR TBD	STEELCRAFT	60 MIN.	METAL	TO MATCH DARK BRONZE	6		MACHINE RM
201	G	3'-0"	7'-0"	20 MIN.	S.C. WOOD	FAC. STAIN MAPLE; CLEAR FINISH	TIMELY	NONE	METAL	TO MATCH DARK BRONZE	3		
202	G	3'-0"	7'-0"	20 MIN.	S.C. WOOD	FAC. STAIN MAPLE; CLEAR FINISH	TIMELY	NONE	METAL	TO MATCH DARK BRONZE	3		
203	G	3'-0"	7'-0"	20 MIN.	S.C. WOOD	FAC. STAIN MAPLE; CLEAR FINISH	TIMELY	NONE	METAL	TO MATCH DARK BRONZE	3		
204	G	3'-0"	7'-0"	20 MIN.	S.C. WOOD	FAC. STAIN MAPLE; CLEAR FINISH	TIMELY	NONE	METAL	TO MATCH DARK BRONZE	3		
205	G	3'-0"	7'-0"	20 MIN.	S.C. WOOD	FAC. STAIN MAPLE; CLEAR FINISH	TIMELY	NONE	METAL	TO MATCH DARK BRONZE	3		
206	G	3'-0"	7'-0"	20 MIN.	S.C. WOOD	FAC. STAIN MAPLE; CLEAR FINISH	TIMELY	NONE	METAL	TO MATCH DARK BRONZE	3		
207	E1	3'-0"	7'-0"	60 MIN.	HM	PAINTED, COLOR TBD	STEELCRAFT	60 MIN.	METAL	TO MATCH DARK BRONZE	1B		PANIC HARDWARE, NO LOCKING DEVICE
208	G	3'-0"	7'-0"	20 MIN.	S.C. WOOD	FAC. STAIN MAPLE; CLEAR FINISH	TIMELY	NONE	METAL	TO MATCH DARK BRONZE	3		
209	G	3'-0"	7'-0"	20 MIN.	S.C. WOOD	FAC. STAIN MAPLE; CLEAR FINISH	TIMELY	NONE	METAL	TO MATCH DARK BRONZE	3		
210	G	3'-0"	7'-0"	20 MIN.	S.C. WOOD	FAC. STAIN MAPLE; CLEAR FINISH	TIMELY	NONE	METAL	TO MATCH DARK BRONZE	3		
211	G	3'-0"	7'-0"	20 MIN.	S.C. WOOD	FAC. STAIN MAPLE; CLEAR FINISH	TIMELY	NONE	METAL	TO MATCH DARK BRONZE	3		
212	H	3'-0"	7'-0"	NONE	S.C. WOOD	FAC. STAIN MAPLE; CLEAR FINISH	TIMELY	NONE	METAL	TO MATCH DARK BRONZE	4A		
213	H	3'-0"	7'-0"	NONE	S.C. WOOD	FAC. STAIN MAPLE; CLEAR FINISH	TIMELY	NONE	METAL	TO MATCH DARK BRONZE	4A		
214	H	3'-0"	7'-0"	NONE	S.C. WOOD	FAC. STAIN MAPLE; CLEAR FINISH	TIMELY	NONE	METAL	TO MATCH DARK BRONZE	2		MDF ROOM
215	G	3'-0"	7'-0"	20 MIN.	S.C. WOOD	FAC. STAIN MAPLE; CLEAR FINISH	TIMELY	20 MIN.	METAL	TO MATCH DARK BRONZE	3		
216	G	3'-0"	7'-0"	20 MIN.	S.C. WOOD	FAC. STAIN MAPLE; CLEAR FINISH	TIMELY	20 MIN.	METAL	TO MATCH DARK BRONZE	3		
217	G	3'-0"	7'-0"	20 MIN.	S.C. WOOD	FAC. STAIN MAPLE; CLEAR FINISH	TIMELY	20 MIN.	METAL	TO MATCH DARK BRONZE	3		
218	E1	3'-0"	7'-0"	60 MIN.	HM	PAINTED, COLOR TBD	STEELCRAFT	60 MIN.	METAL	TO MATCH DARK BRONZE	1B		PANIC HARDWARE, NO LOCKING DEVICE
219	G	3'-0"	7'-0"	20 MIN.	S.C. WOOD	FAC. STAIN MAPLE; CLEAR FINISH	TIMELY	20 MIN.	METAL	TO MATCH DARK BRONZE	3		
220	H	3'-0"	7'-0"	NONE	S.C. WOOD	FAC. STAIN MAPLE; CLEAR FINISH	TIMELY	NONE	METAL	TO MATCH DARK BRONZE	4		
221	H	3'-0"	7'-0"	NONE	S.C. WOOD	FAC. STAIN MAPLE; CLEAR FINISH	TIMELY	NONE	METAL	TO MATCH DARK BRONZE	5		
222	H	3'-0"	7'-0"	NONE	S.C. WOOD	FAC. STAIN MAPLE; CLEAR FINISH	TIMELY	NONE	METAL	TO MATCH DARK BRONZE	4		
300	E	3'-6"	7'-0"	60 MIN.	HM	PAINTED, COLOR TBD	STEELCRAFT	60 MIN.	METAL	TO MATCH DARK BRONZE	1B		PANIC HARDWARE, NO LOCKING DEVICE
301	E	3'-6"	7'-0"	60 MIN.	HM	PAINTED, COLOR TBD	STEELCRAFT	60 MIN.	METAL	TO MATCH DARK BRONZE	1B		PANIC HARDWARE, NO LOCKING DEVICE
302	D	3'-0"	7'-0"	NONE	HM	PAINTED, COLOR TBD	STEELCRAFT	NONE	METAL	TO MATCH DARK BRONZE	4		
303	D	3'-0"	7'-0"	NONE	HM	PAINTED, COLOR TBD	STEELCRAFT	NONE	METAL	TO MATCH DARK BRONZE	4		
304	D	3'-0"	7'-0"	NONE	HM	PAINTED, COLOR TBD	STEELCRAFT	NONE	METAL	TO MATCH DARK BRONZE	5		WATER HEATER

NOTE:
EGRESS DOORS SHALL BE READILY OPENABLE FROM THE EGRESS SIDE WITHOUT THE USE OF A KEY OR ANY SPECIAL KNOWLEDGE OR EFFORT. 1008.1.8.

NOTE:
STOREFRONT SYSTEM: KAWNEER "TUFFLINE 500 HEAVY DUTY" SERIES OR APPROVED EQUAL.

DOOR TYPES 8

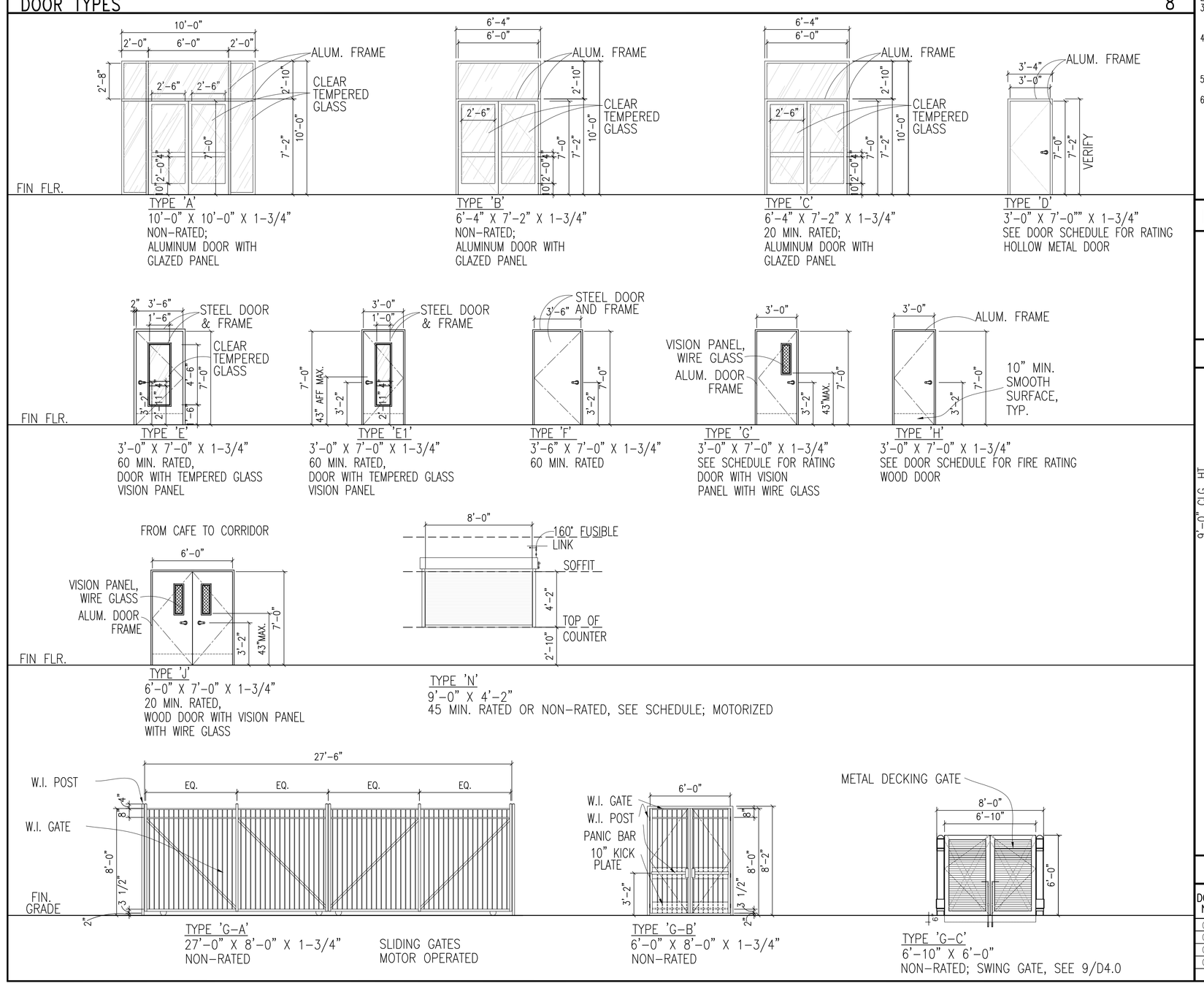

HARDWARE GROUPS 1

GROUP	QTY.	ITEM DESCRIPTION	MODEL NO.	MANUFACTURER	FINISH	REMARKS
1	6	HINGES	HEAVY-DUTY, FULL-MORTISE HINGE; CFM83HD	PEMKO	CLEAR ALUMINUM ANODIZED	Room Types: Double Exit Doors that require panic hardwares
	2	RIM EXIT DEVICE	99-L-F; WITH SURFACE-MOUNTED VERTICAL RODS	VON DUPRIN	US10	
	2	LEVER/TRIM	PAIRED DOORS; #03 LEVER STYLE	VON DUPRIN	US10	
	2	RIM CYLINDER	20-057	SCHLAGE	643E CLEAR ALUMINUM ANODIZED	
	2	CLOSER	2030 SERIES PACER HEAVY-DUTY CONCEALED	LCN	CLEAR ALUMINUM ANODIZED	
	1	SEAL	TBD; –	PEMKO	CLEAR ALUMINUM ANODIZED	
	1	THRESHOLD	NW4946 (TO MATCH DOOR FRAME WIDTH)	NEW WORLD	ALUM	
	1	REMOVABLE MULLION	KR-99LF, MULLION REMOVABLE BY KEY	VON DUPRIN	ALUM	
1A	3	HINGES	4x4 1/4" RADIUS TEMPLATE BUTT HINGE, NRP	RAMCO	US10B CLEAR ALUMINUM ANODIZED	Room Types: Single Exit Door that requires panic hardware, stairway
	1	RIM EXIT DEVICE	99-L-F; WITH SURFACE-MOUNTED VERTICAL RODS	VON DUPRIN	US10	
	1	RIM CYLINDER	20-057	SCHLAGE	643E CLEAR ALUMINUM ANODIZED	
	1	LEVER/TRIM	#03 LEVER STYLE	VON DUPRIN	US10	
	1	CLOSERS	8501 SURFACE-MOUNTED	NORTON	US10BE	
	1	KICKPLATE	10"x34"	TAH	TO MATCH CLEAR ALUMINUM ANODIZED	
	1	SEAL	S88W SMOKE SEAL 17'	PEMKO	CLEAR ALUMINUM ANODIZED	
	1	THRESHOLD	NW4946 (TO MATCH DOOR FRAME WIDTH)	NEW WORLD	ALUM	
1B	SAME AS 1A EXCEPT NO RIM CYLINDER AND NO THRESHOLD					
2	3	HINGES	4x4 1/4" RADIUS TEMPLATE BUTT HINGE, NRP	RAMCO	US10B CLEAR ALUMINUM ANODIZED	Room Types: MECHANICAL, STORAGE, IDF
	1	STOREROOM LOCKSET	ND80R, RHODES STORAGE ROOM LOCK	SCHLAGE	626	
	1	FLOOR STOP	SH436/438 DOME STOP (V.I.F.)	TAH	TO MATCH CLEAR ALUMINUM ANODIZED	Doors:
3	3	HINGES	4x4 1/4" RADIUS TEMPLATE BUTT HINGE, NRP	RAMCO	US10B CLEAR ALUMINUM ANODIZED	Room Types: RATED WALL, CORRIDOR WALL Classroom, Teacher's Lounge, Storage Rated Electrical Room, Locker Room
	1	CLASSROOM LOCKSET	ND70PD CLASSROOM SECURITY LOCK	SCHLAGE	643E CLEAR ALUMINUM ANODIZED	
	1	CLOSERS	8501 SURFACE-MOUNTED	NORTON	US10BE	
	1	FLOOR STOP	SH436/438 DOME STOP (V.I.F.)	TAH	TO MATCH CLEAR ALUMINUM ANODIZED	
	1	KICKPLATE	10"x34"	TAH	TO MATCH CLEAR ALUMINUM ANODIZED	
	1	SEAL	S88W SMOKE SEAL 17'	PEMKO	CLEAR ALUMINUM ANODIZED	
3A	SAME AS #3 EXCEPT					
	1	RIM EXIT DEVICE	99-L-F; WITH SURFACE-MOUNTED VERTICAL RODS	VON DUPRIN	US10	Room Types: Large classroom Exit Door
4	3	HINGES	4x4 1/4" RADIUS TEMPLATE BUTT HINGE, NRP	RAMCO	US10B CLEAR ALUMINUM ANODIZED	Room Types: Student Restrooms in rated corridor
	1	CLOSERS	8501 SURFACE-MOUNTED	NORTON	US10BE	
	1	WALL STOPS	SH 401	TAH	TO MATCH CLEAR ALUMINUM ANODIZED	
	1	LATCHSET	ND10, RHODES PASSAGE LOCK	SCHLAGE	643E CLEAR ALUMINUM ANODIZED	
	1	KICKPLATE	10"x34"	TAH	TO MATCH CLEAR ALUMINUM ANODIZED	
	1	SEAL	S88W SMOKE SEAL 17'	PEMKO	CLEAR ALUMINUM ANODIZED	
4A	SAME AS #4 EXCEPT					Room Types: Faculty Restrooms
	1	LOCKSET	ND85	SCHLAGE	643E AGED BRONZE	
5	3	HINGES	4x4 1/4" RADIUS TEMPLATE BUTT HINGE, NRP	RAMCO	26D	Room Types: Janitor's Closet
	1	STOREROOM LOCKSET	ND80R, RHODES STORAGE ROOM LOCK	SCHLAGE	626	
	1	O.H. CONC. HOLDER	712H	DORMA	626	
	1	MOP PLATE	6"x34"; KM050	TRM	626	
	1	CLOSERS	8501 SURFACE-MOUNTED	NORTON	US10BE	
6	3	HINGES				Room Types: ELEVATOR MACHINE ROOM
	1	STOREROOM LOCKSET	ND80R, RHODES STORAGE ROOM LOCK	SCHLAGE	626	
	1	CLOSER				
	1	WALL STOP				
	1	KICKPLATE				
	1	SEAL				
7	3	SPRING-LOADED HINGES	TBD	TBD	TBD	Room Types: Wrought Iron Gate (Pedestrian)
	1	RIM EXIT DEVICE	TBD	TBD	TBD	
	1	LEVER/TRIM	TBD	TBD	TBD	
	1	RIM CYLINDER	TBD	TBD	TBD	
	1	10" KICKPLATE	TBD	TBD	TBD	
	1	ELECTRIC STRIKE	TBD	TBD	TBD	
7A	SAME AS #7 EXCEPT DOUBLE THE HARDWARE					Room Types: Double Wrought Iron Gate (Pedestrian)
8	2	GATE MOTOR	TBD	TBD	TBD	Room Types: Wrought Iron Gate (Vehicle) Gate: G002
	1	ENTRY KEYPAD	TBD	TBD	TBD	

NOTE:
ALL FIRE RATED DOORS SHALL BE SELF OR AUTOMATIC CLOSING

DOOR NOTES 2

1. THE CONTRACTOR SHALL SECURE KEYING REQUIREMENTS FOR LOCKSETS FROM THE USER.
2. PROVIDE HANDICAP COMPLIANT HARDWARE ON ALL DOORS AS WELL AS ALL PEDESTRIAN WROUGHT IRON GATES SHOWN ON A0.5.
3. LATCHING AND LOCKING DOORS THAT ARE HAND ACTIVATED AND WHICH ARE IN THE PATH OF TRAVEL SHALL BE OPERABLE WITH A SINGLE EFFORT BY LEVER TYPE HARDWARE, PANIC BAR, PUSH-PULL ACTIVATING BARS, U-SHAPED HANDLES OR OTHER HARDWARE DESIGNED TO PROVIDE PASSAGE WITHOUT REQUIRING THE ABILITY TO GRASP THE OPENING HARDWARE. (1133B.2.5.2)
4. MAXIMUM EFFORT TO OPERATE DOORS SHALL NOT EXCEED 5 POUNDS FOR EXTERIOR DOORS AND 5 POUNDS FOR INTERIOR DOORS, SUCH PULL OR PUSH EFFORT BEING APPLIED AT RIGHT ANGLES TO HINGED DOORS AND AT THE CENTER PLANE OF SLIDING OR FOLDING ARE REQUIRED. DOORS, COMPENSATING DEVICES OR AUTOMATIC DOOR OPERATORS MAY BE UTILIZED TO MEET THE ABOVE STANDARDS. WHEN FIRE DOORS THE MAX. EFFORT TO OPERATE THE DOOR MAY BE INCREASED TO THE MAXIMUM ALLOWABLE BY THE APPROPRIATE ADMINISTRATIVE AUTHORITY, NOT TO EXCEED 15 LBS. (1133.B.2.5)
5. EXIT DOORWAYS SHALL BE NOT LESS THAN 36" IN WIDTH. PROJECTIONS, INCLUDING PANIC HARDWARE IF REQUIRED, SHALL NOT REDUCE THE OPENING TO LESS THAN 32" CLEAR WIDTH. (1133B.2.3)
6. SECURITY PROVISIONS:
   A. ALL PIN TYPE DOOR HINGES ACCESSIBLE FROM THE OUTSIDE SHALL HAVE NON REMOVABLE HINGE PINS. HINGES SHALL HAVE MIN. 1/4" DIA. STEEL JAMB STUD WITH 1/4" MIN. PROTECTION.
   B. CYLINDER GUARDS SHALL BE INSTALLED ON ALL CYLINDER LOCKS WHENEVER THE CYLINDER PROJECTS BEYOND THE FACE OF THE DOOR OR IS OTHERWISE ACCESSIBLE TO GRIPPING TOOLS.
   C. GLAZED OPENINGS WITHIN 40" OF THE DOOR LOCK WHEN THE DOOR IS IN THE CLOSED POSITION SHALL BE FULLY TEMPERED GLASS.
   D. PANES OF GLASS WITH A DIMENSION GREATER THAN 6" BUT LESS THAN 48" SHALL BE FULLY TEMPERED.
   E. EXTERIOR DOORS SHALL HAVE DEAD BOLTS WITH HARDENED INSERTS AND DEADLOCKING LATCH WITH KEY OPERATED LOCK.
   F. STRAIGHT DEAD BOLTS SHALL HAVE A MIN. THROW OF 1" AND EMBEDMENT OF NOT LESS THAN 5/8" AND A HOOK SHAPED OR AN EXPANDING LUG DEAD BOLT SHALL HAVE A MIN. THROW OF 3/4".
7. GLASS DOORS, ADJACENT PANELS, AND ALL GLAZED OPENINGS WITHIN 18" OF WALKING SURFACE AND WITHIN 12" OF THE DOOR'S EDGE AND 60" ABOVE WALKING SURFACE SHALL BE TEMPERED GLASS.
8. ALL EXTERIOR DOORS SHALL LIMIT AIR LEAKAGE AROUND THEIR PERIMETER WHEN IN A CLOSED POSITION. SEAL OR ASTRAGAL SHALL BE PROVIDED AT HEAD, SILL AND JAMB. DOORS MOUNTED ON THE INSIDE OR THE OUTSIDE OF THE EXTERIOR WALLS SHALL HAVE A MINIMUM 1" LAP AT THE JAMBS. MEETING PORTIONS OF SECTIONS, BI-PARTING, OR DOUBLE DOORS SHALL BE PROVIDED WITH A WEATHER TIGHT ASTRAGAL OR SEAL.
9. CORRIDORS WILL HAVE INTERIOR DOOR OPENINGS PROTECTED BY TIGHT-FITTING SMOKE AND DRAFT CONTROL ASSEMBLIES RATED 20 MINUTE DOORS WILL BE MAINTAINED SELF-CLOSING OR BE AUTOMATIC CLOSING BY ACTION OF A SMOKE DETECTOR PER SECTION 715.4.3.1 DOORS WILL BE GASKETED TO PROVIDED A SMOKE AND DRAFT SEAL WHERE THE DOOR MEETS THE STOP ON SIDES AND TOP. CONTRACTOR IS RESPONSIBLE TO CHECK AND MAKE SURE THE EXISTING DOORS IN CORRIDORS MEET THE REQUIREMENTS.
10. EXIT DOORS SHALL BE OPENABLE FROM THE INSIDE WITHOUT USE OF A KEY OR ANY SPECIAL KNOWLEDGE OR EFFORT. BUILDING CODE SECTION 1008.1.8.7
11. WIDTH AND HEIGHT OF REQUIRED EXIT DOORWAYS TO COMPLY WITH BUILDING CODE SECTION 1008.1.1
12. ALL CORRIDOR OPENINGS SHALL MEET THE REQUIREMENT OF BUILDING CODE 1008, INCLUDING STEEL FRAMES, 20 MINUTE LABELED DOORS, HINGES, LATCHING DEVICES, AND CLOSURES. BUILDING CODE SECTION 1008.1.8
13. THE BOTTOM 10 INCHES OF ALL DOORS AND GATES EXCEPT AUTOMATIC AND SLIDING SHALL HAVE A SMOOTH, UNINTERRUPTED SURFACE TO ALLOW THE DOOR TO BE OPENED BY A WHEELCHAIR FOOTREST WITHOUT CREATING A TRAP OR HAZARDOUS CONDITION. WHERE NARROW FRAME DOORS ARE USED, A 10 INCH SMOOTH PANEL SHALL BE INSTALLED ON THE PUSH SIDE OF THE DOOR, WHICH WILL ALLOW THE DOOR TO BE OPENED BY A WHEELCHAIR FOOTREST WITHOUT CREATING A TRAP OR HAZARDOUS CONDITION. (1133B.2.6, FIG 11B-29)
14. FIRE DOOR ASSEMBLIES REQUIRED TO HAVE A MIN. FORC PROTECTION RATING OF 20 MINUTES WHERE LOCATED IN CORRIDOR WALLS OR SMOKE-BARRIER WALLS HAVING A FIRE RESISTANCE RATING IN ACCORDANCE WITH TABLE 715.4, SHALL BE TESTED-NFPA 252 OR UL 10C. FIRE DOOR ASSEMBLIES SHALL ALSO MEET THE REQUIREMENTS FOR SOKE AND DRAFT CONTROL ASSEMBLY TESTED IN ACCORDANCE WITH UL 1784. GLAZING MATERIAL IN THE DOOR ITSELF SHALL HAVE A MINIMUM FIRE PROTECTION RATING OF 20 MINITES. BUILDING CODE 715.4.3, 715.4.3.1 AND 715.4.3.2.

HARDWARE NOTES 4

1. THE MAXIMUM UNDERCUT OF ALL DOORS SHALL NOT EXCEED 1/2" (ONE-HALF INCH) ABOVE THE SURFACE OF THE FINISHED FLOOR OR THRESHOLD. ALL DOORS SHALL BE UNDERCUT ON THE JOB SITE AND SPECIFICALLY FOR INDIVIDUAL DOOR OPENINGS AND FLOOR FINISHES.
2. THE CONTRACTOR SHALL VERIFY THE FINISHED HEIGHT OF ALL FLOOR FINISHES PRIOR TO UNDERCUTTING OF DOORS.
3. HARDWARE SPECIFIED FOR INSTALLATION ON DOORS AND FRAMES WHICH REQUIRE A FIRE-RATED LABEL SHALL REQUIRE A FIRE-RATED LABEL SHALL COMPLY WITH ALL CODE REQUIREMENTS GOVERNING HARDWARE TYPE AND INSTALLATION METHODS FOR RATED ASSEMBLIES.
4. INSTALL DOOR CLOSERS AS SPECIFIED ON ALL FIRE RATED DOORS.
5. ALL HARDWARE FINISHED SHALL BE AS NOTED IN SCHEDULE OR EQUAL.
6. ALL STRIKES SHALL HAVE DUST COVERS.

THRESHOLD DETAIL 3

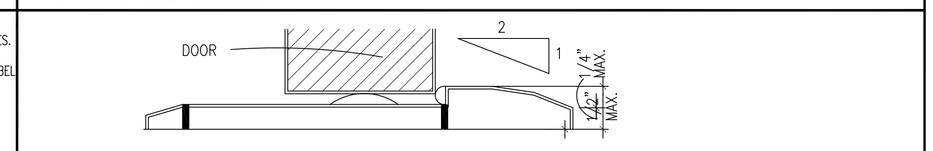

DOOR HEAD, JAMB AND SILL DETAILS 5

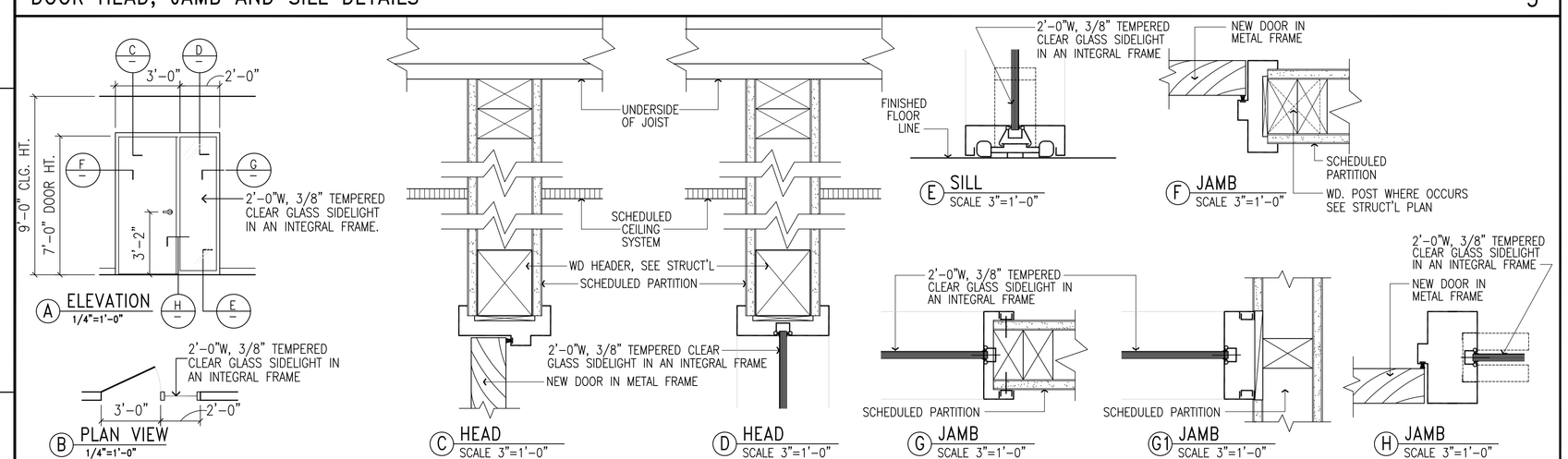

GATE SCHEDULE AND TYPES 9

DOOR NO.	DOOR TYPE	DOOR WIDTH	DOOR HEIGHT	DOOR RATING	DOOR MATERIAL	DOOR FINISH	FRAME MANU.	FRAME RATING	FRAME MATERIAL	FRAME FINISH	HDWR GRP	REMARKS
G001	G-C	6'-10"	6'-0"	NONE	METAL DECKING	PAINT-DARK GRAY	–	NONE	WROUGHT IRON	PAINT	–	–
G002	G-B	6'-0"	8'-0"	NONE	WROUGHT IRON	PAINT	–	NONE	WROUGHT IRON	PAINT	7A	PANIC HARDWARE-W/ANTI-GRAFFITTI COATING LARR#25601T-SWING GATE
G003	G-A	27'-6"	8'-0"	NONE	WROUGHT IRON	PAINT	–	NONE	WROUGHT IRON	PAINT	8	MOTOR OPERATED-W/ANTI-GRAFFITTI COATING LARR#25601T- SLIDING GATE
G004	G-B	6'-0"	8'-0"	NONE	WROUGHT IRON	PAINT	–	NONE	WROUGHT IRON	PAINT	7A	PANIC HARDWARE- W/ANTI-GRAFFITTI COATING LARR#25601T-SWING GATE

FRANCO ARCHITECTS INC.
12345 Ventura Blvd. H
Studio City, CA 91604
Tel 818 754-2030
Fax 818 754-2032
Architecture and Planning

MAGNOLIA SCIENCE ACADEMY
18220 SHERMAN WAY, RESEDA, CA91335

REV	DESCRIPTION	DATE
	PLAN CHECK #1	6/14/2017

LICENSED ARCHITECT
JOHANN D. MINOT
C27010
4/30/2019
RENEWAL DATE
STATE OF CALIFORNIA

PROJECT
MAGNOLIA SCIENCE ACADEMY

PROJECT ADDRESS
18220 SHERMAN WAY, RESEDA, CA91335

DRAWING TITLE
DOOR SCHEDULE

DRAWN BY: SL
ISSUE DATE: 6/14/2017
JOB NUMBER:
DRAWING SCALE: AS NOTED
APPROVED BY:
DRAWING NUMBER
A10.0

1 WINDOW TYPES

SCALE: NONE

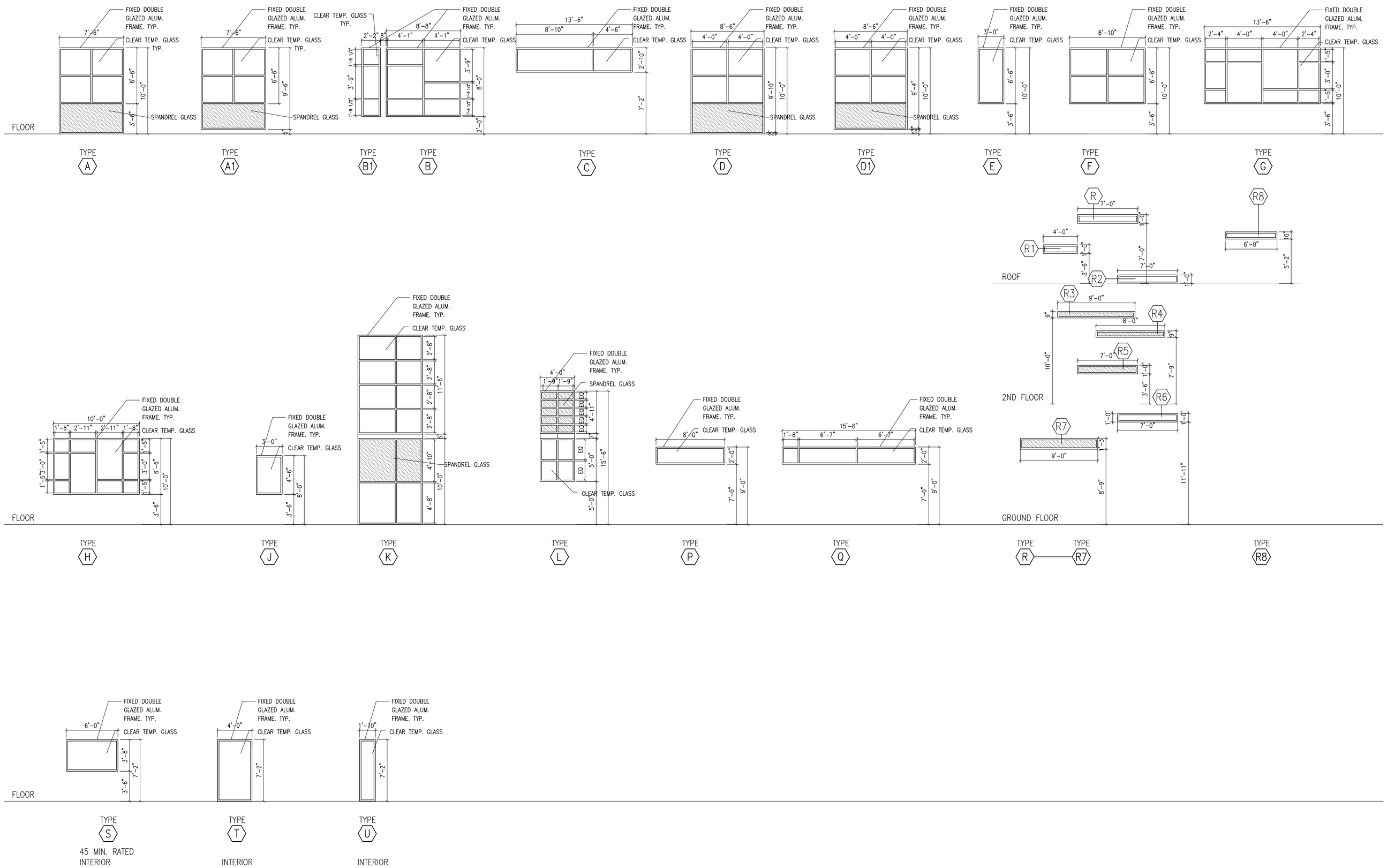

TYPE	SIZE WIDTH	SIZE HEIGHT	WINDOW MATERIAL	WINDOW GLASS	WINDOW FINISH	FRAME MATERIAL	FRAME FINISH	FIRE-RATING	MANUFACTURER	SPEC.	REMARKS
A	SEE ABOVE	SEE ABOVE	ALUMINUM	DUAL PANE	FACTORY FINISH	ALUMINUM	PAINTED ALUMINUM STOREFRONT	NON-RATED	–	STOREFRONT	SEE GLASS SPEC. A10.2
B											
C											
D											
E											
F											
G											
H											
J											
K											
L											
P											
Q											
R–R8											
S								45 MIN. RATED			INTERIOR WINDOW
T											INTERIOR WINDOW
U											INTERIOR WINDOW

NOTES:
FOR THE WINDOWS' AND SKYLIGHT'S U-FACTOR SHGC (SOLAR HEAT COEFFECIENT) AND VT VALUES REFER TO MECHANICAL TILE 24 PLANS.

FRANCO ARCHITECTS INC.
12345 Ventura Blvd. H
Studio City, CA 91604
Tel 818 754-2030
Fax 818 754-2032
Architecture and Planning

MAGNOLIA SCIENCE ACADEMY
18220 SHERMAN WAY, RESEDA, CA91335

REV	DESCRIPTION	DATE
	PLAN CHECK #1	6/14/2017

LICENSED ARCHITECT
JOHANN D. WANG
C27010
4/30/2019
RENEWAL DATE
STATE OF CALIFORNIA

PROJECT
MAGNOLIA SCIENCE ACADEMY

PROJECT ADDRESS
18220 SHERMAN WAY, RESEDA, CA91335

DRAWING TITLE
WINDOW SCHEDULE

DRAWN BY: SL
ISSUE DATE: 6/14/2017
JOB NUMBER
DRAWING SCALE: AS NOTED
APPROVED BY:

DRAWING NUMBER
A10.1

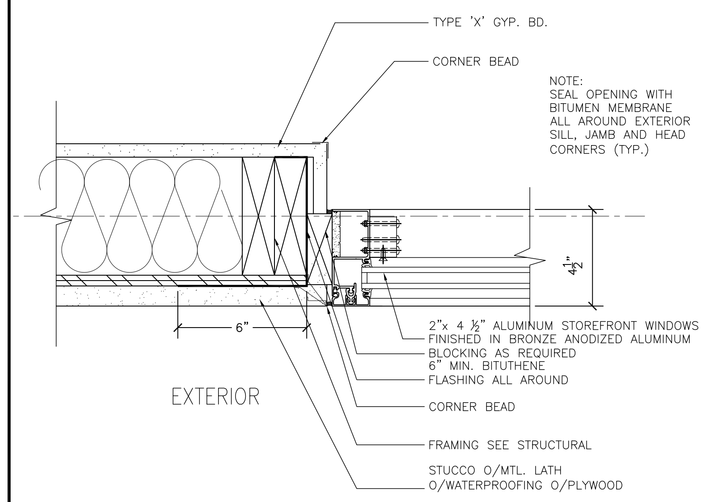

1 STOREFRONT WINDOW JAMB
SCALE: 3" = 1'-0"

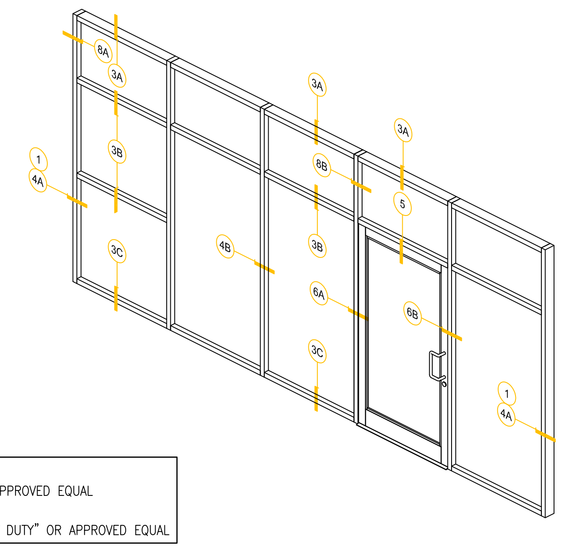

STOREFRONT SYSTEM:
KAWNEER "TRIFAB 451UT" OR APPROVED EQUAL
STOREFRONT DOOR SYSTEM:
KAWNEER "TUFFLINE 500 HEAVY DUTY" OR APPROVED EQUAL

2 STOREFRONT KEY ELEVATION
SCALE: NOT TO SCALE

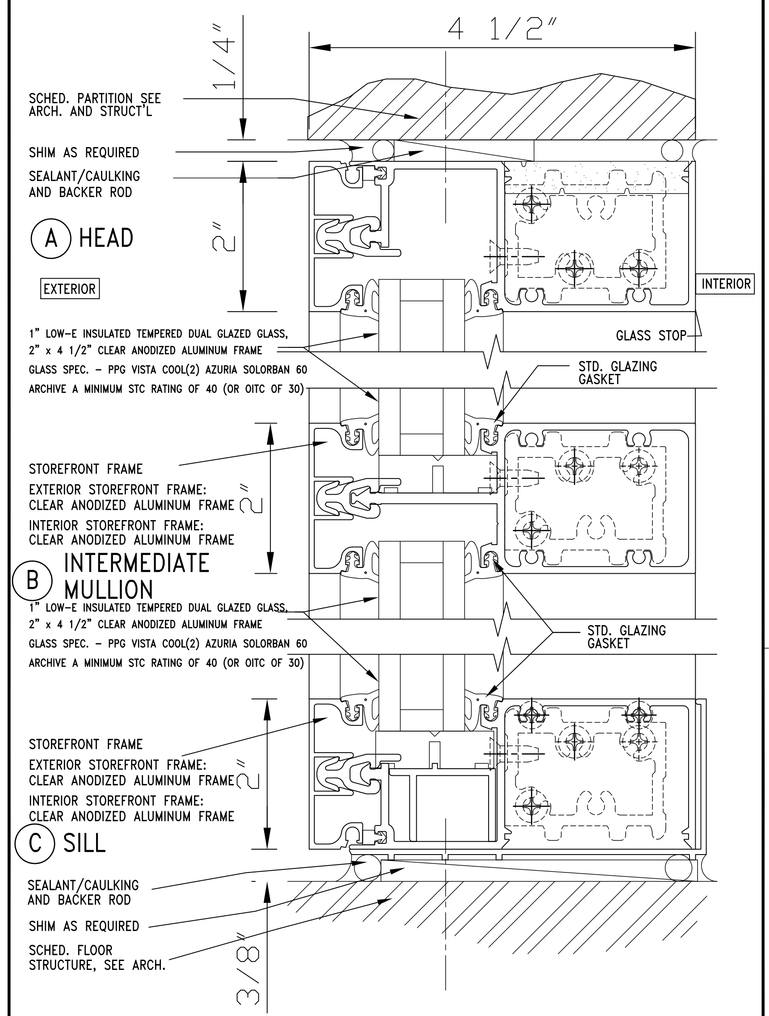

3 SECTION @STOREFRONT HEAD, INTERMEDIATE & SILL
SCALE: 1'-0" = 1'-0"

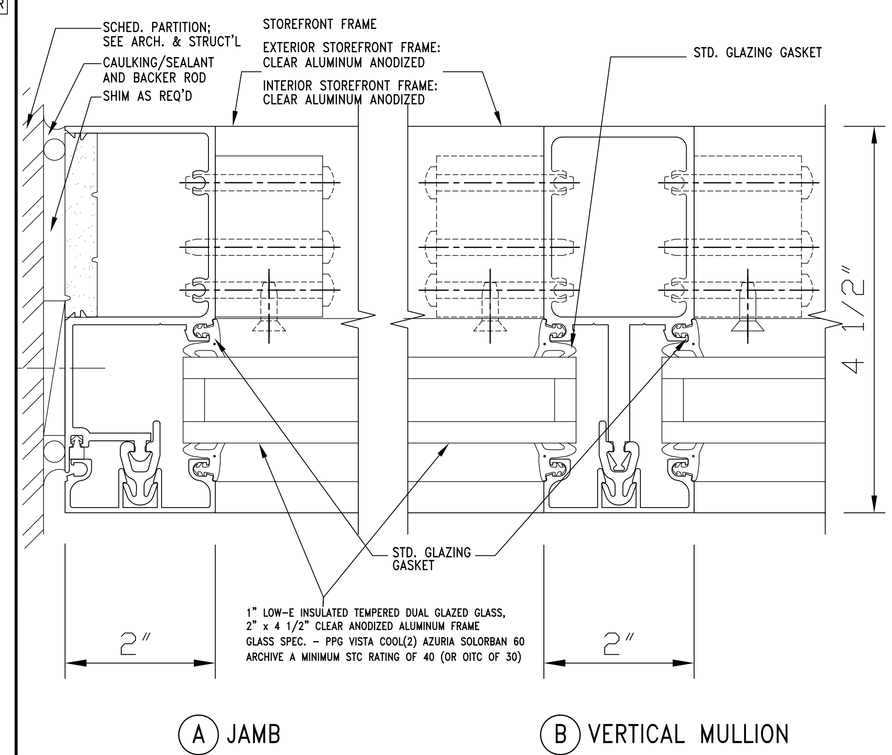

4 SECTION AT STOREFRONT JAMB & VERTICAL MULLION
SCALE: 1'-0" = 1'-0"

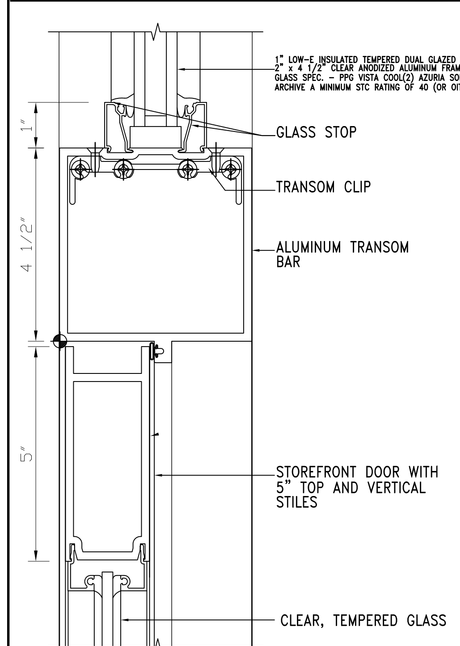

5 SECTION AT STOREFRONT DOOR AND TRANSOM
SCALE: 6" = 1'-0"

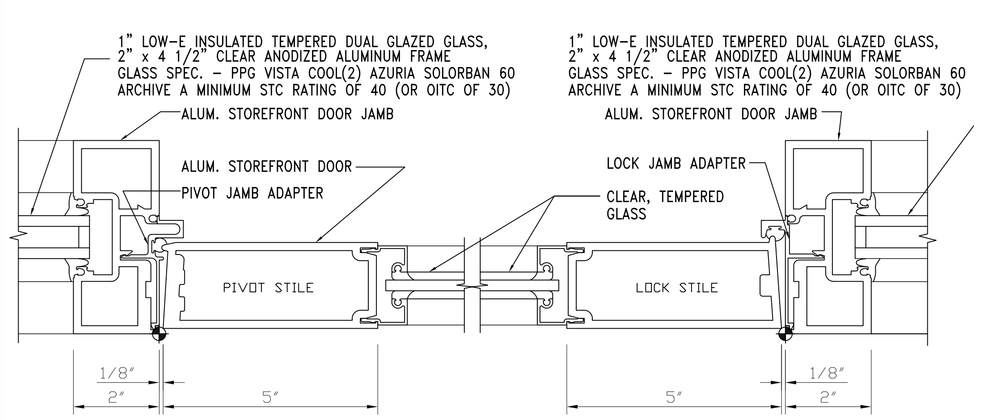

6 SECTION AT STOREFRONT DOOR & SIDELIGHT
SCALE: 6" = 1'-0"

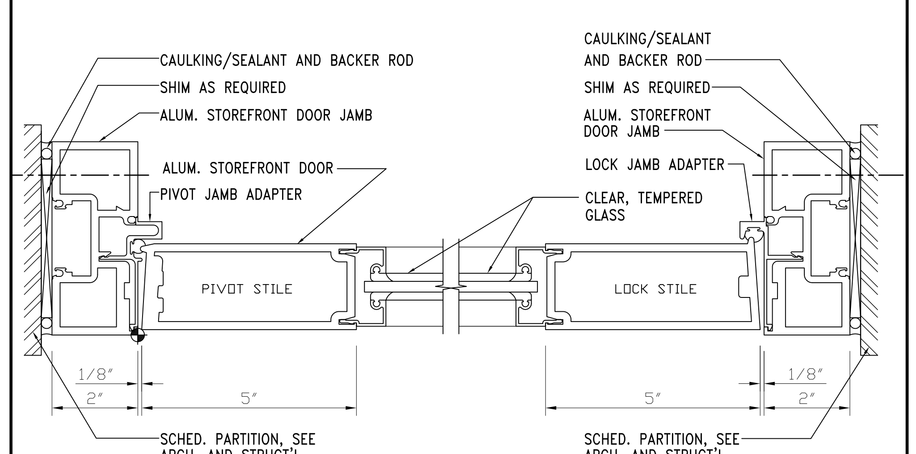

7 SECTION AT STOREFRONT DOOR JAMB
SCALE: 6" = 1'-0"

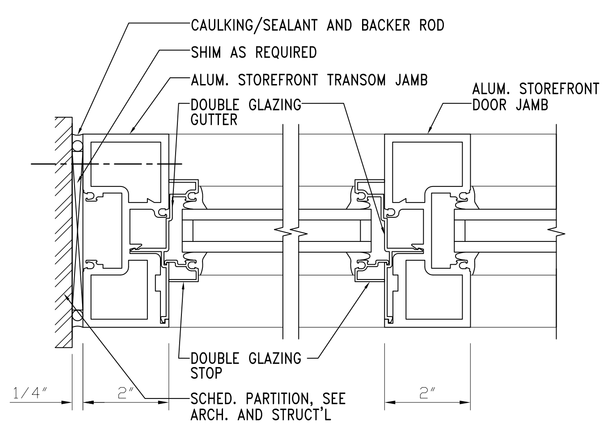

8 SECTION AT STOREFRONT TRANSOM JAMB
SCALE: 6" = 1'-0"

FRANCO ARCHITECTS INC.
12345 Ventura Blvd. H
Studio City, CA 91604
Tel 818 754-2030
Fax 818 754-2032
Architecture and Planning

MAGNOLIA SCIENCE ACADEMY
18220 SHERMAN WAY, RESEDA, CA91335

REV	DESCRIPTION	DATE
	PLAN CHECK #1	6/14/2017

LICENSED ARCHITECT
JOHANN D. WANG
C27010
4/30/2019
RENEWAL DATE
STATE OF CALIFORNIA

PROJECT
MAGNOLIA SCIENCE ACADEMY

PROJECT ADDRESS
18220 SHERMAN WAY, RESEDA, CA91335

DRAWING TITLE
WINDOW SCHEDULE

DRAWN BY: SL
ISSUE DATE: 6/14/2017
JOB NUMBER:
DRAWING SCALE: AS NOTED
APPROVED BY:

DRAWING NUMBER
A10.2

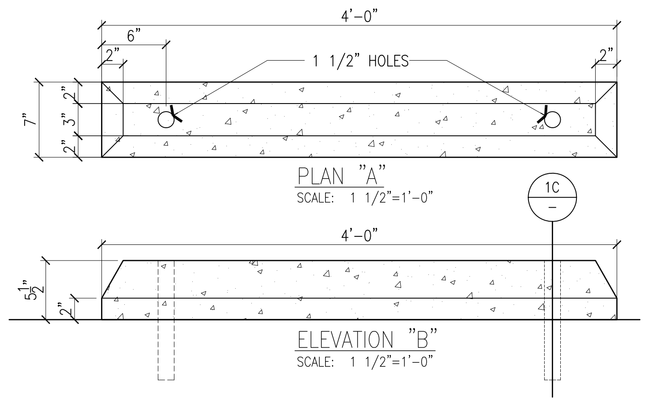

1 CONCRETE WHEEL STOP
SCALE: AS SHOWN

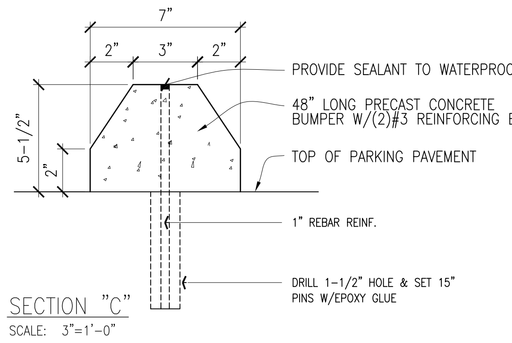

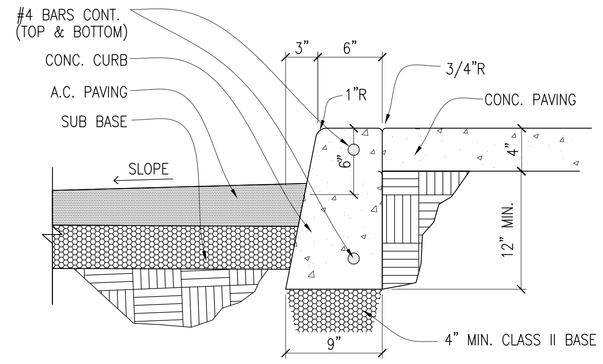

#2 CONCRETE CURB

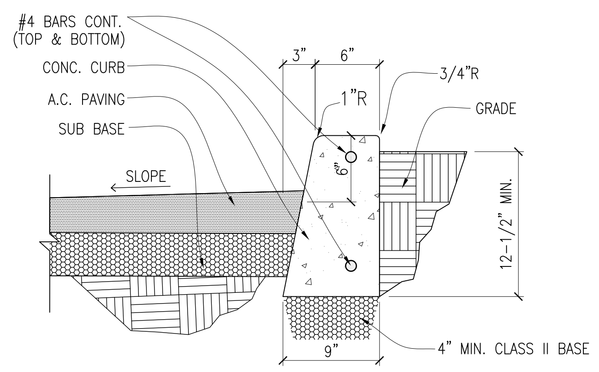

#2A CONCRETE CURB AT PLANTER

NOTE: SEE CONCRETE CURB DETAIL ON CIVIL PLAN

2/2A CONCRETE CURB
SCALE: 1 1/2" = 1'-0"

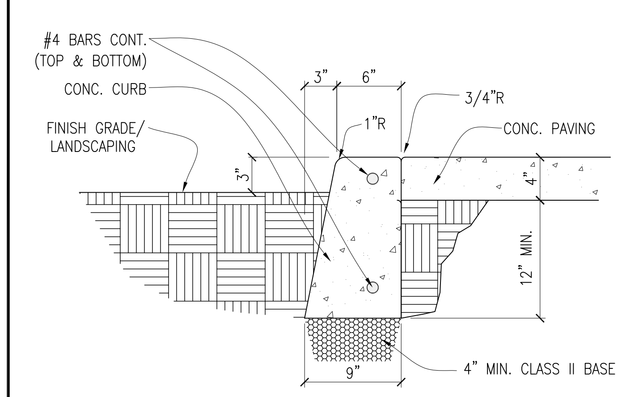

NOTE: SEE CONCRETE CURB DETAIL ON CIVIL PLAN

3 CONCRETE WALK AND PLANTER
SCALE: 3"=1'-0"

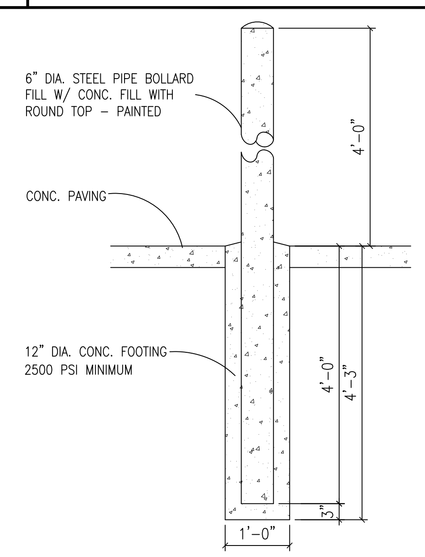

6 CONC. FILLED BOLLARDS
SCALE: 3/4" = 1'-0"

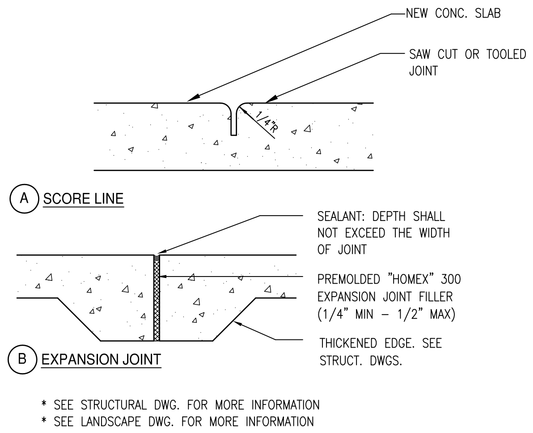

4 CONCRETE SLAB JOINTS ON GRADE
SCALE: N.T.S.

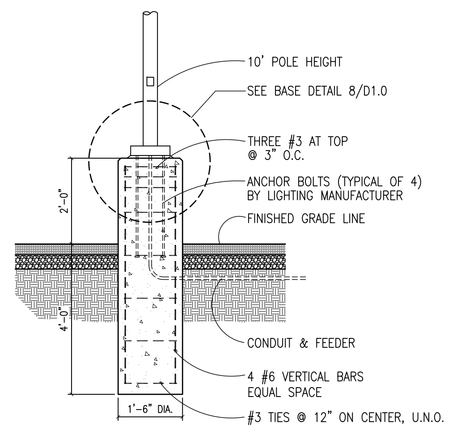

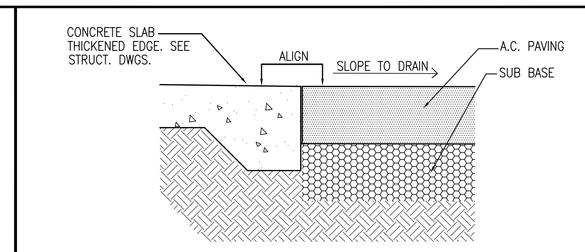

5 CONCRETE AND ASPHALT JOINT
SCALE: 3"=1'-0"

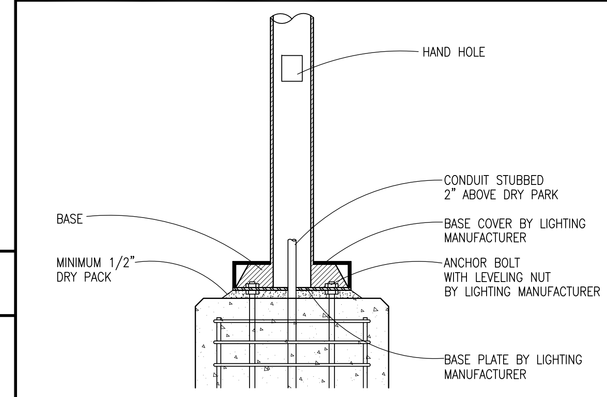

8 LIGHT POLE BASE DETAIL
SCALE: 1 1/2"=1'-0"

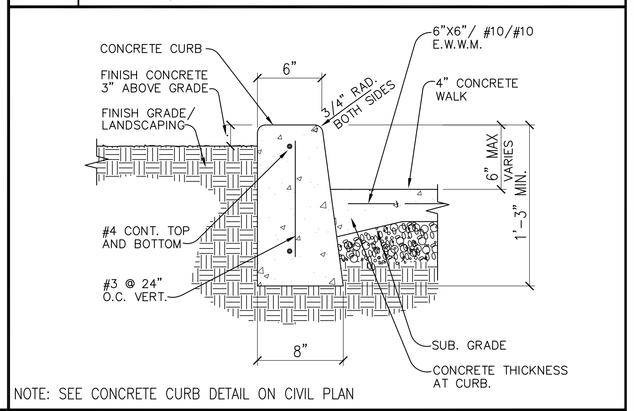

NOTE: SEE CONCRETE CURB DETAIL ON CIVIL PLAN

9 CONCRETE CURB AND PLANTER
SCALE: 1 1/2"=1'-0"

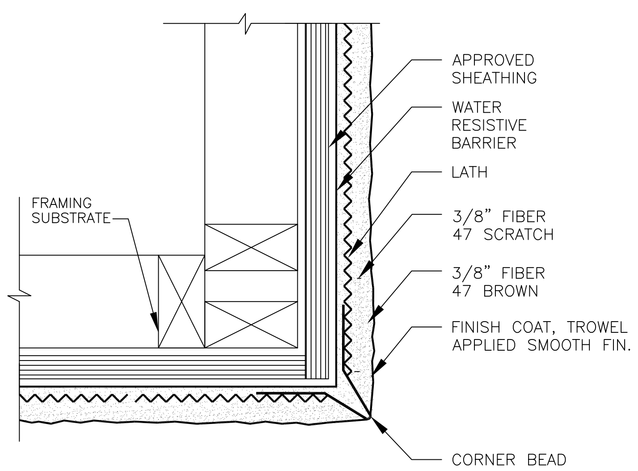

10 EXTERIOR CORNER - CORNER BEAD
SCALE: NONE

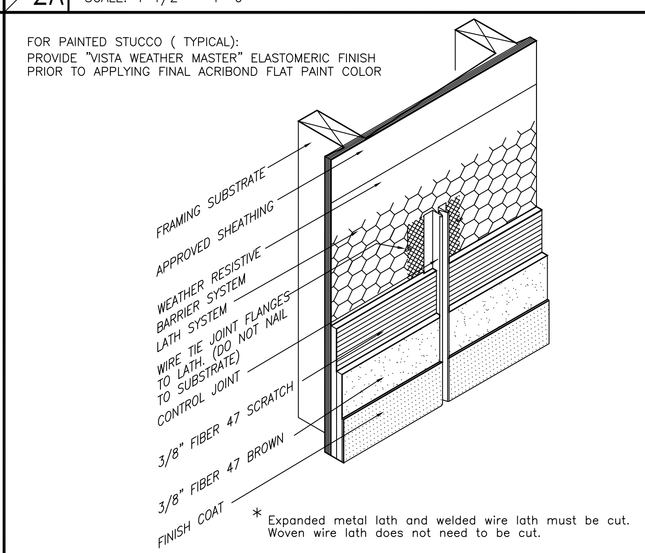

11 CJ 101 CONTROL JOINT
SCALE: NONE

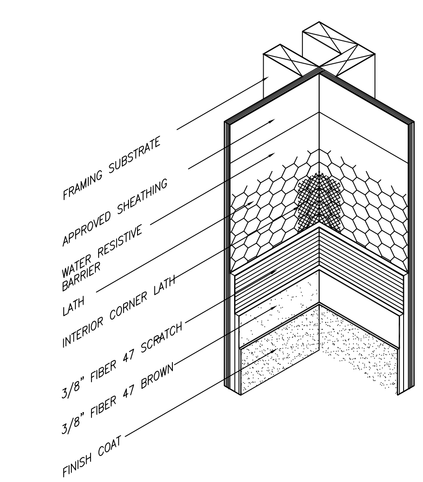

12 INSIDE CORNER WITH LATH
SCALE: NONE

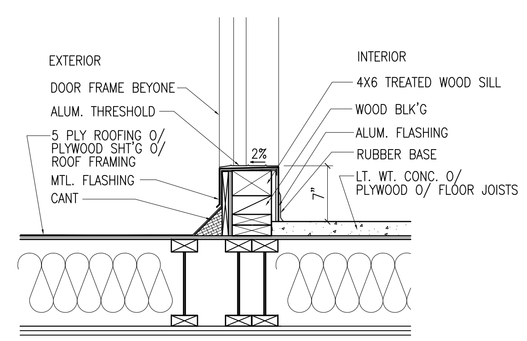

13 DOOR SILL DETAIL
SCALE: 1" = 1'-0"

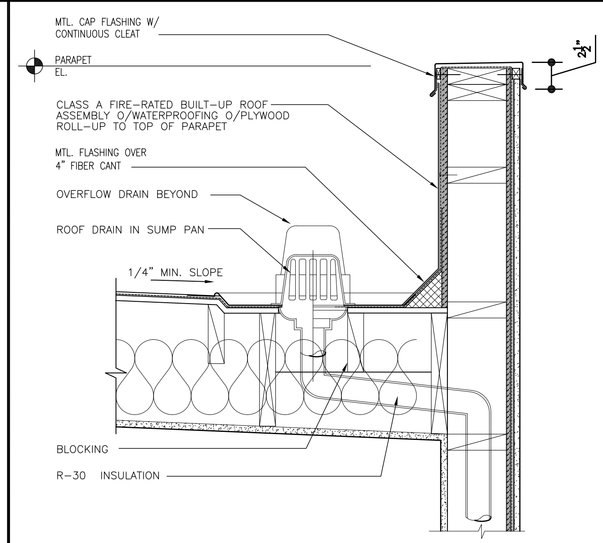

14 TYPICAL ROOF DRAIN AT PARAPET
SCALE: 1 1/2"=1'-0"

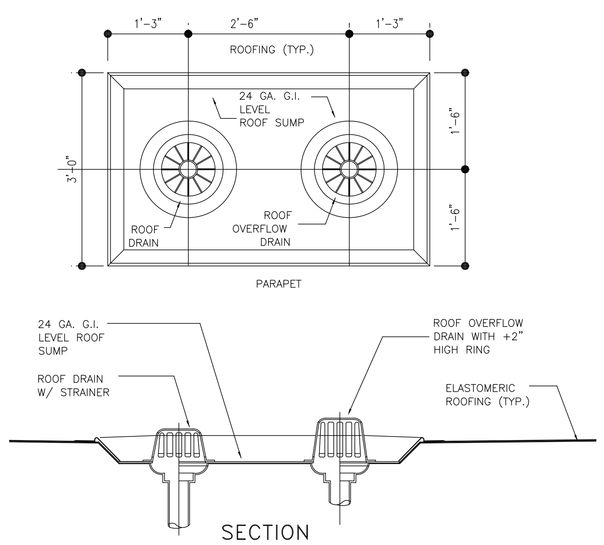

15 TYPICAL ROOF DRAIN
SCALE: 1 1/2"=1'-0"

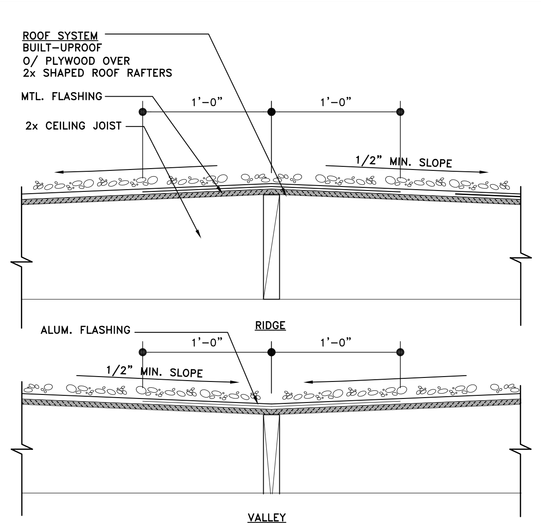

16 ROOF RIDGE & VALLEY
SCALE: 1 1/2"=1'-0"

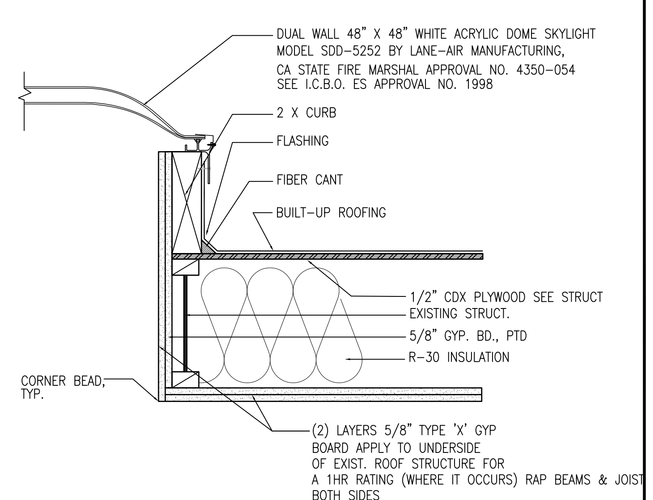

17 SKY LIGHT & CURB
SCALE: 1 1/2" = 1'-0"

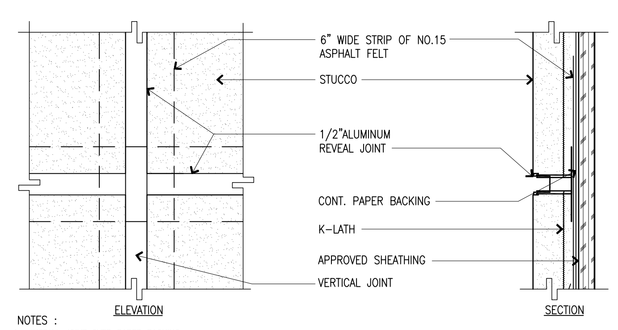

NOTES :
1. INSTALL JOINT OVER PAPER BACKING.
2. INTERRUPT LATH AND INSTALL OVER FLANGE OF JOINT.
3. SEAL ALL INTERSECTIONS AND CONNECTIONS.

18 ALUMINUM REVEAL JOINT
SCALE: 1 1/2"=1'-0"

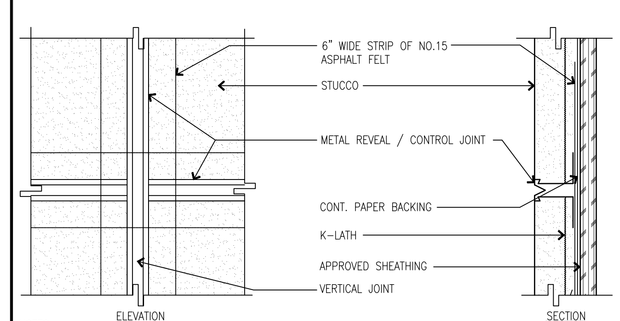

NOTES :
1. INSTALL CONTROL JOINT OVER PAPER BACKING.
2. INTERRUPT LATH AND INSTALL OVER FLANGE OF CONTROL JOINT.
3. INSTALL FEMALE HALF OF JOINT ON TOP WHERE HORIZ. JOINT OCCURS.
4. WIRE-TIE CONTROL JOINT TO LATH.
5. SEAL ALL INTERSECTIONS AND CONNECTIONS.
6. "ZIP STRIP" TO BE REMOVED AFTER APPLICATION OF STUCCO

19 METAL REVEAL / CONTROL JOINT
SCALE: 1 1/2"=1'-0"

FRANCO ARCHITECTS INC.
12345 Ventura Blvd. H
Studio City, CA 91604
Tel 818 754-2030
Fax 818 754-2032
Architecture and Planning

MAGNOLIA SCIENCE ACADEMY
18220 SHERMAN WAY, RESEDA, CA91335

REV	DESCRIPTION	DATE
	PLAN CHECK #1	6/14/2017

LICENSED ARCHITECT
JOHANN D. WANG
C27010
4/30/2019
RENEWAL DATE
STATE OF CALIFORNIA

PROJECT
MAGNOLIA SCIENCE ACADEMY

PROJECT ADDRESS
18220 SHERMAN WAY, RESEDA, CA91335

DRAWING TITLE
SITE & BUILDING DETAILS

DRAWN BY
ISSUE DATE 6/14/2017
JOB NUMBER
DRAWING SCALE AS NOTED
APPROVED BY:
DRAWING NUMBER
D1.0

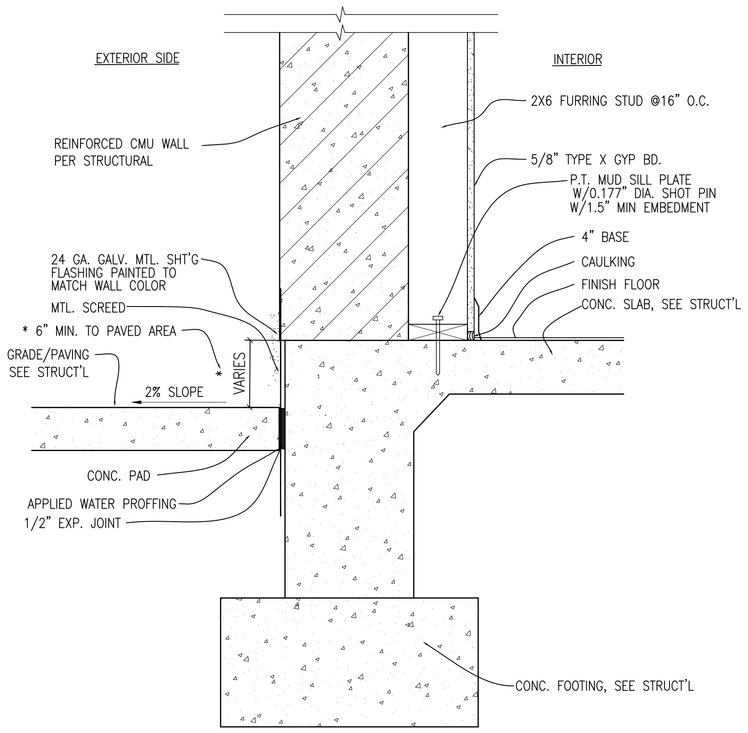

1 2-HR EXTERIOR CONC./CMU WALL W/FURRING STUD
SCALE: 1 1/2"=1'-0"

2 NOT USED
SCALE: NONE

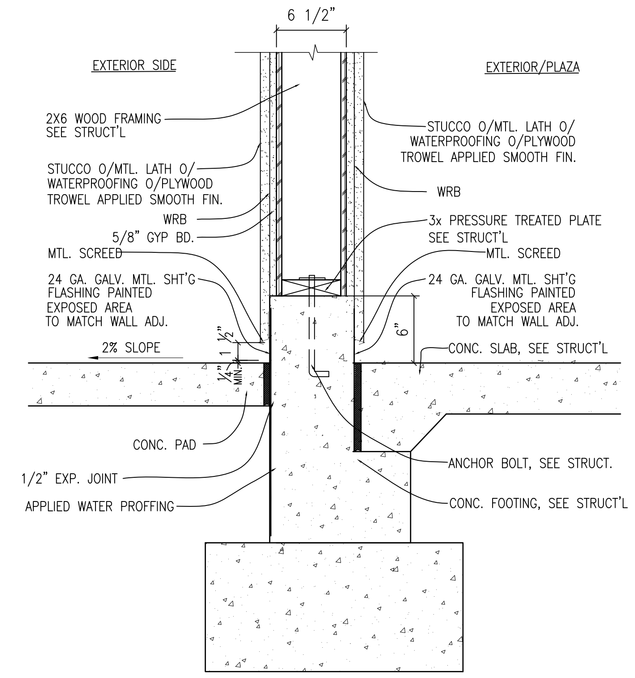

3 2-HR EXTERIOR STUD WALL @ NORTH CANOPY
SCALE: 1 1/2"=1'-0"

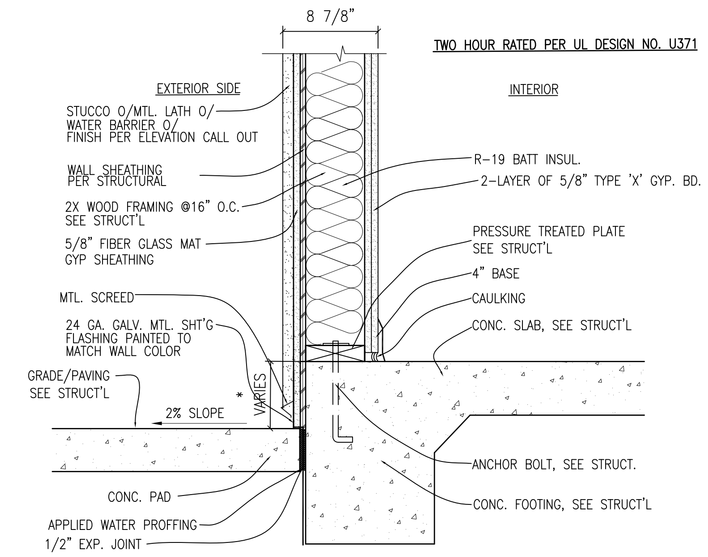

1. PROVIDE RATED FIRE DAMPERS FOR ALL DUCTS PENETRATING RATED WALLS.
2. ALL OPENINGS IN ONE HOUR WALLS SHALL BE 20 MIN. FIRE RATED ASSEMBLY W/CLOSER.
3. USE 1" TYPE S DRYWALL SCREWS 8" O.C. TO VERTICAL EDGES. SEE GA FILE NO. WP 1200.

4/4A 2-HR EXTERIOR STUD WALL
SCALE: 1 1/2"=1'-0"

NOTE: WALL AND FLOOR-CEILING ACCESSIBLY SHALL HAVE STC RATING OF AT LEAST 40.

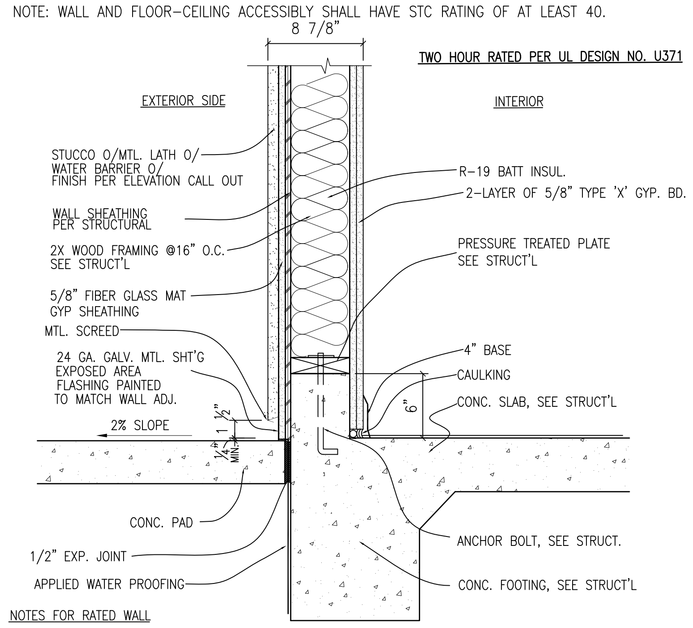

NOTES FOR RATED WALL

1. PROVIDE RATED FIRE DAMPERS FOR

5A: SAME AS 5, EXCEPT PLYWOOD ON BOTH SIDES OF STUD, SEE STRUCTURAL

5/5A 2-HR EXTERIOR STUD WALL@ ENTRANCE
SCALE: 1 1/2"=1'-0"

NOTE: WALL AND FLOOR-CEILING ACCESSIBLY SHALL HAVE STC RATING OF AT LEAST 40.

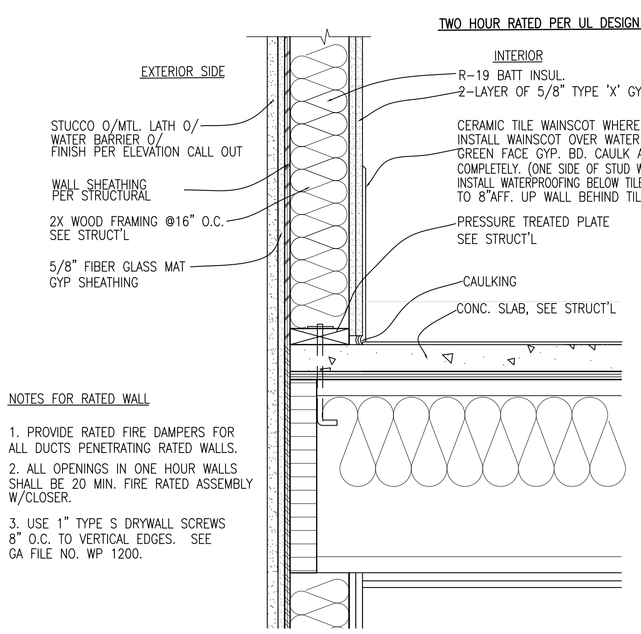

NOTES FOR RATED WALL

1. PROVIDE RATED FIRE DAMPERS FOR ALL DUCTS PENETRATING RATED WALLS.
2. ALL OPENINGS IN ONE HOUR WALLS SHALL BE 20 MIN. FIRE RATED ASSEMBLY W/CLOSER.
3. USE 1" TYPE S DRYWALL SCREWS 8" O.C. TO VERTICAL EDGES. SEE GA FILE NO. WP 1200.

6 2-HR EXTERIOR STUD WALL @ INTERIOR WET AREA
SCALE: 1 1/2"=1'-0"

NOTE: WALL AND FLOOR-CEILING ACCESSIBLY SHALL HAVE STC RATING OF AT LEAST 40.

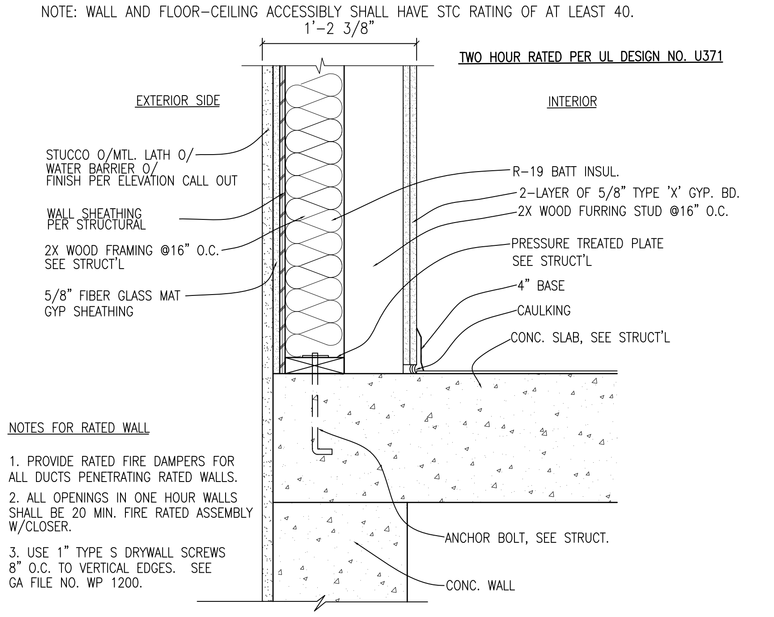

NOTES FOR RATED WALL

1. PROVIDE RATED FIRE DAMPERS FOR ALL DUCTS PENETRATING RATED WALLS.
2. ALL OPENINGS IN ONE HOUR WALLS SHALL BE 20 MIN. FIRE RATED ASSEMBLY W/CLOSER.
3. USE 1" TYPE S DRYWALL SCREWS 8" O.C. TO VERTICAL EDGES. SEE GA FILE NO. WP 1200.

7 2-HR EXTERIOR STUD WALL W/ FURRING STUD
SCALE: 1 1/2"=1'-0"

NOTE: WALL AND FLOOR-CEILING ACCESSIBLY SHALL HAVE STC RATING OF AT LEAST 40.

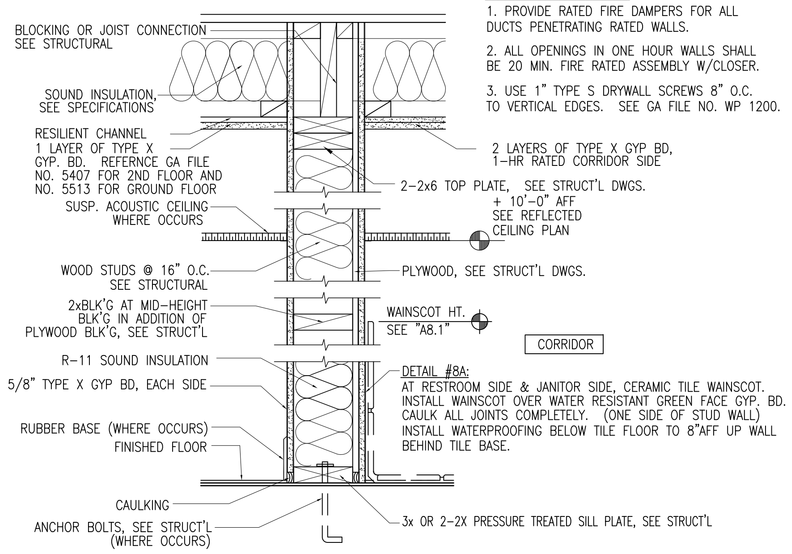

NOTES FOR RATED WALL:
1. PROVIDE RATED FIRE DAMPERS FOR ALL DUCTS PENETRATING RATED WALLS.
2. ALL OPENINGS IN ONE HOUR WALLS SHALL BE 20 MIN. FIRE RATED ASSEMBLY W/CLOSER.
3. USE 1" TYPE S DRYWALL SCREWS 8" O.C. TO VERTICAL EDGES. SEE GA FILE NO. WP 1200.

DETAIL #8A:
AT RESTROOM SIDE & JANITOR SIDE, CERAMIC TILE WAINSCOT. INSTALL WAINSCOT OVER WATER RESISTANT GREEN FACE GYP. BD. CAULK ALL JOINTS COMPLETELY. (ONE SIDE OF STUD WALL) INSTALL WATERPROOFING BELOW TILE FLOOR TO 8"AFF UP WALL BEHIND TILE BASE.

8/8A 1-HR RATED INTERIOR WALL
SCALE: 1 1/2"=1'-0"

NOTE: WALL AND FLOOR-CEILING ACCESSIBLY SHALL HAVE STC RATING OF AT LEAST 40.

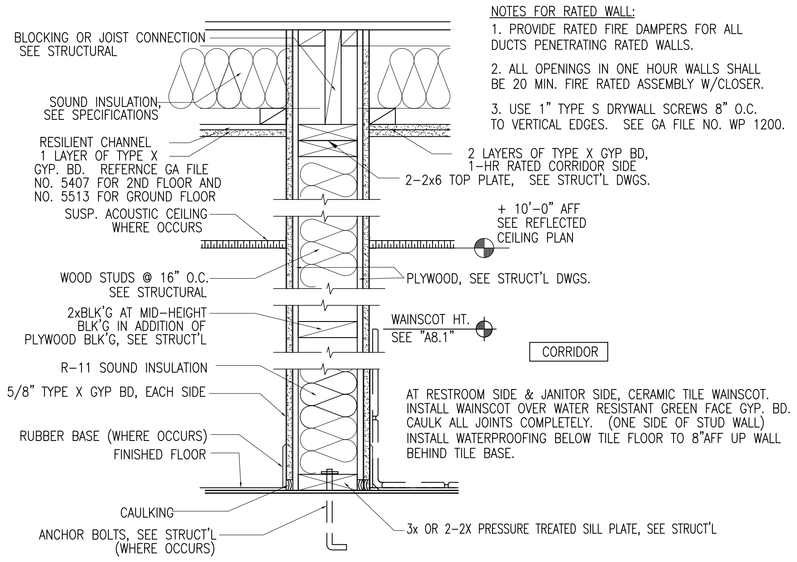

NOTES FOR RATED WALL:
1. PROVIDE RATED FIRE DAMPERS FOR ALL DUCTS PENETRATING RATED WALLS.
2. ALL OPENINGS IN ONE HOUR WALLS SHALL BE 20 MIN. FIRE RATED ASSEMBLY W/CLOSER.
3. USE 1" TYPE S DRYWALL SCREWS 8" O.C. TO VERTICAL EDGES. SEE GA FILE NO. WP 1200.

8B ONE HOUR RATED INTERIOR WALL
SCALE: 1 1/2"=1'-0"

NOTE: WALL AND FLOOR-CEILING ACCESSIBLY SHALL HAVE STC RATING OF AT LEAST 40.

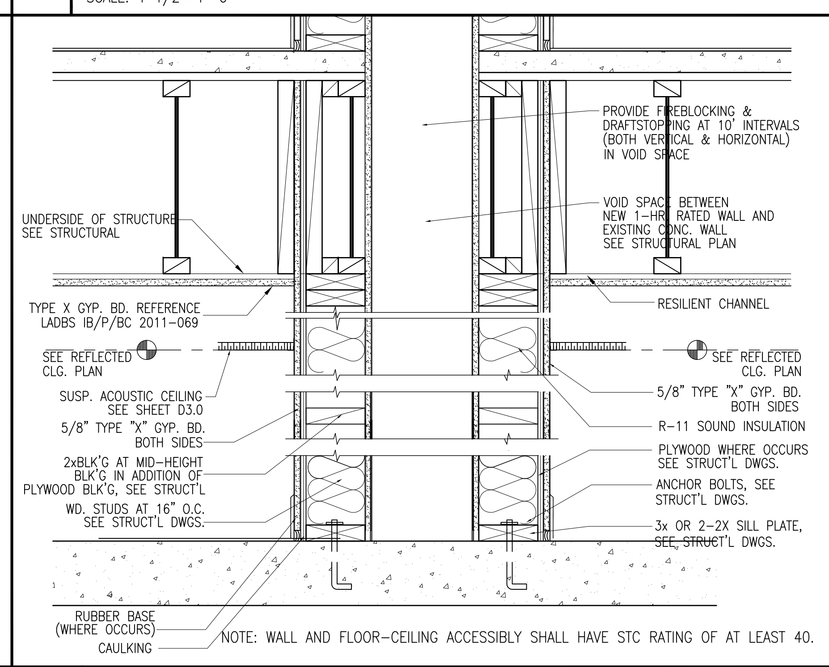

NOTE: WALL AND FLOOR-CEILING ACCESSIBLY SHALL HAVE STC RATING OF AT LEAST 40.

9 ONE HOUR RATED SHAFT WALL
SCALE: 1 1/2"=1'-0"

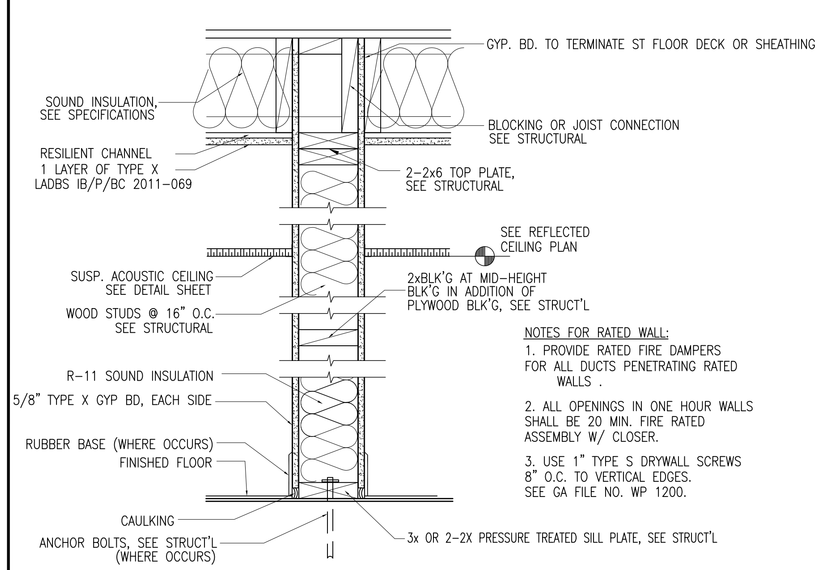

NOTES FOR RATED WALL:
1. PROVIDE RATED FIRE DAMPERS FOR ALL DUCTS PENETRATING RATED WALLS .
2. ALL OPENINGS IN ONE HOUR WALLS SHALL BE 20 MIN. FIRE RATED ASSEMBLY W/ CLOSER.
3. USE 1" TYPE S DRYWALL SCREWS 8" O.C. TO VERTICAL EDGES. SEE GA FILE NO. WP 1200.

10/10A NON-BEARING WALL DETAIL
SCALE: 1 1/2"=1'-0"

NOTE: WALL AND FLOOR-CEILING ACCESSIBLY SHALL HAVE STC RATING OF AT LEAST 40.

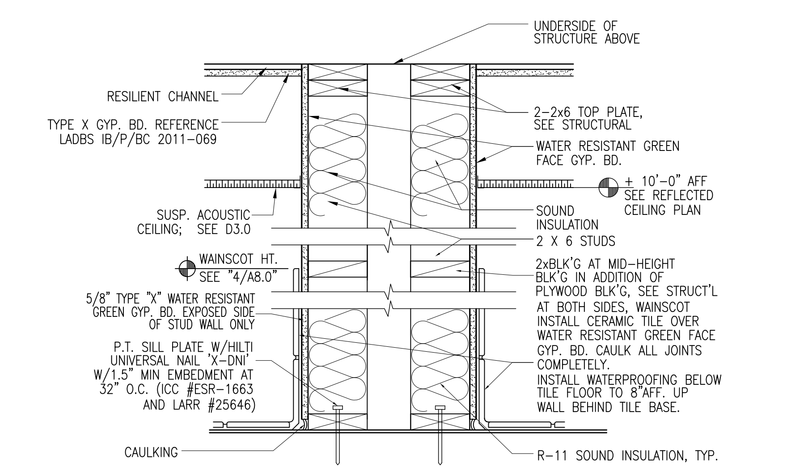

NOTE: WALL AND FLOOR-CEILING ACCESSIBLY SHALL HAVE STC RATING OF AT LEAST 40.

11 WOOD STUD DBL. PLUMBING WALL
SCALE: 1 1/2"=1'-0"

FRANCO ARCHITECTS INC.
12345 Ventura Blvd. H
Studio City, CA 91604
Tel 818 754-2030
Fax 818 754-2032
Architecture and Planning

MAGNOLIA SCIENCE ACADEMY
18220 SHERMAN WAY, RESEDA, CA91335

REV	DESCRIPTION	DATE
	PLAN CHECK #1	6/14/2017

LICENSED ARCHITECT JOHANN D. WANG C27010 4/30/2019 RENEWAL DATE STATE OF CALIFORNIA

PROJECT: MAGNOLIA SCIENCE ACADEMY
PROJECT ADDRESS: 18220 SHERMAN WAY, RESEDA, CA91335
DRAWING TITLE: DETAILS
DRAWN BY:
ISSUE DATE: 6/14/2017
JOB NUMBER:
DRAWING SCALE: AS NOTED
APPROVED BY:
DRAWING NUMBER: D2.0

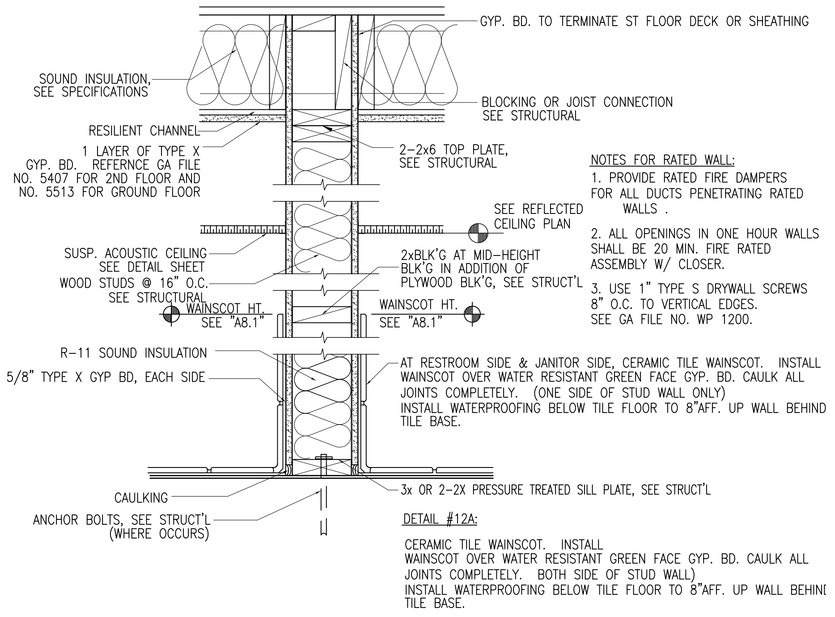

NOTES FOR RATED WALL:

1. PROVIDE RATED FIRE DAMPERS FOR ALL DUCTS PENETRATING RATED WALLS .
2. ALL OPENINGS IN ONE HOUR WALLS SHALL BE 20 MIN. FIRE RATED ASSEMBLY W/ CLOSER.
3. USE 1" TYPE S DRYWALL SCREWS 8" O.C. TO VERTICAL EDGES. SEE GA FILE NO. WP 1200.

DETAIL #12A:

CERAMIC TILE WAINSCOT. INSTALL WAINSCOT OVER WATER RESISTANT GREEN FACE GYP. BD. CAULK ALL JOINTS COMPLETELY. BOTH SIDE OF STUD WALL) INSTALL WATERPROOFING BELOW TILE FLOOR TO 8"AFF. UP WALL BEHIND TILE BASE.

NOTE: WALL AND FLOOR-CEILING ACCESSIBLY SHALL HAVE STC RATING OF AT LEAST 40.

1/1A STUD WALL AT WET AREAS
SCALE: 1 1/2"=1'-0"

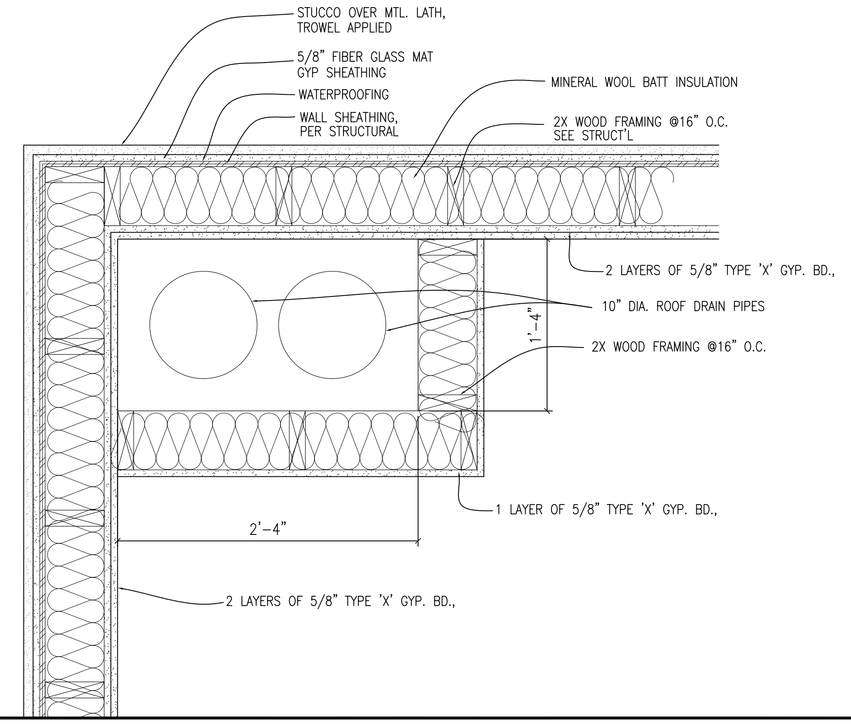

2 FURRED WALL @ ROOF DRAINS
SCALE: 1 1/2"=1'-0"

3 NOT USED
SCALE: NONE

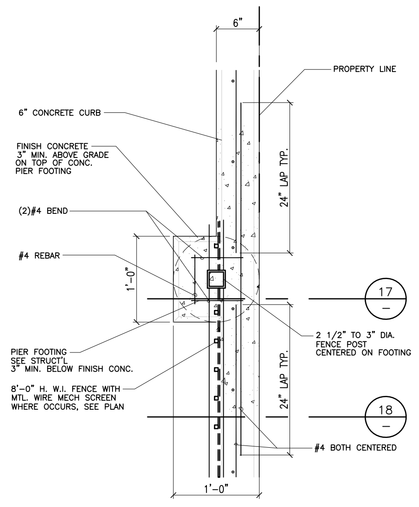

4 WROUGHT IRON FENCE FOOTING DETAIL
SCALE: 1"=1'-0" (STRUCTURAL DETAIL PROVIDED BY B&B STRUCTURAL ENGINEER)

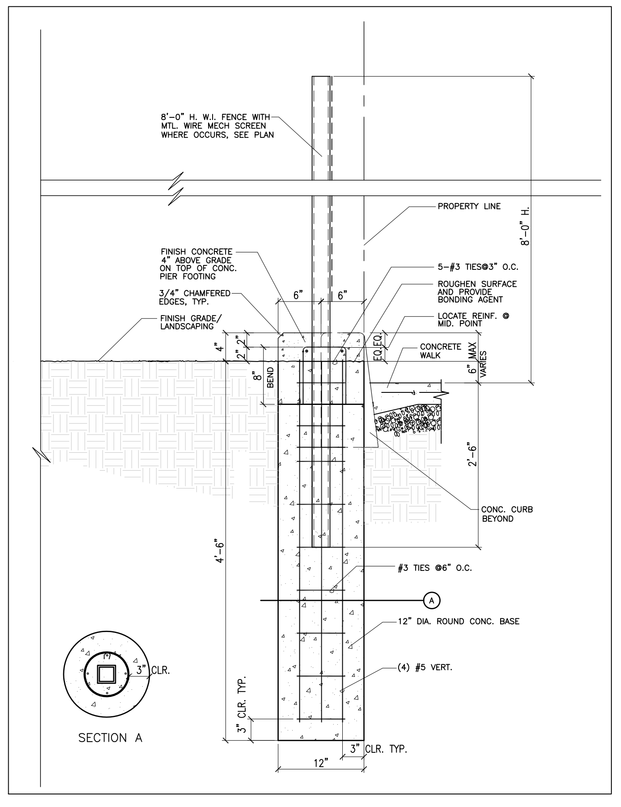

5 WROUGHT IRON FENCE SECTION
SCALE: 1"=1'-0" (STRUCTURAL DETAIL PROVIDED BY B&B STRUCTURAL ENGINEER)

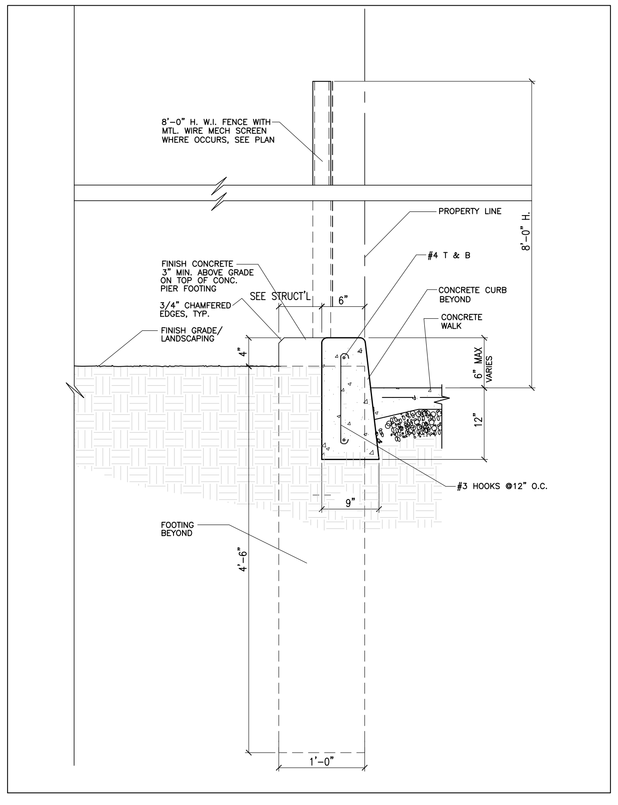

6 WROUGHT IRON FENCE AT CONC. CURB
SCALE: 1"=1'-0"

FRANCO ARCHITECTS INC.
12345 Ventura Blvd. H
Studio City, CA 91604
Tel 818 754-2030
Fax 818 754-2032
Architecture and Planning

MAGNOLIA SCIENCE ACADEMY
18220 SHERMAN WAY, RESEDA, CA91335

REV	DESCRIPTION	DATE
	PLAN CHECK #1	6/14/2017

LICENSED ARCHITECT
JOHANN D. WANG
C27010
4/30/2019
RENEWAL DATE
STATE OF CALIFORNIA

PROJECT
MAGNOLIA SCIENCE ACADEMY

PROJECT ADDRESS
18220 SHERMAN WAY, RESEDA, CA91335

DRAWING TITLE

DRAWN BY
ISSUE DATE 6/14/2017
JOB NUMBER
DRAWING SCALE AS NOTED
APPROVED BY:

DRAWING NUMBER
D3.0

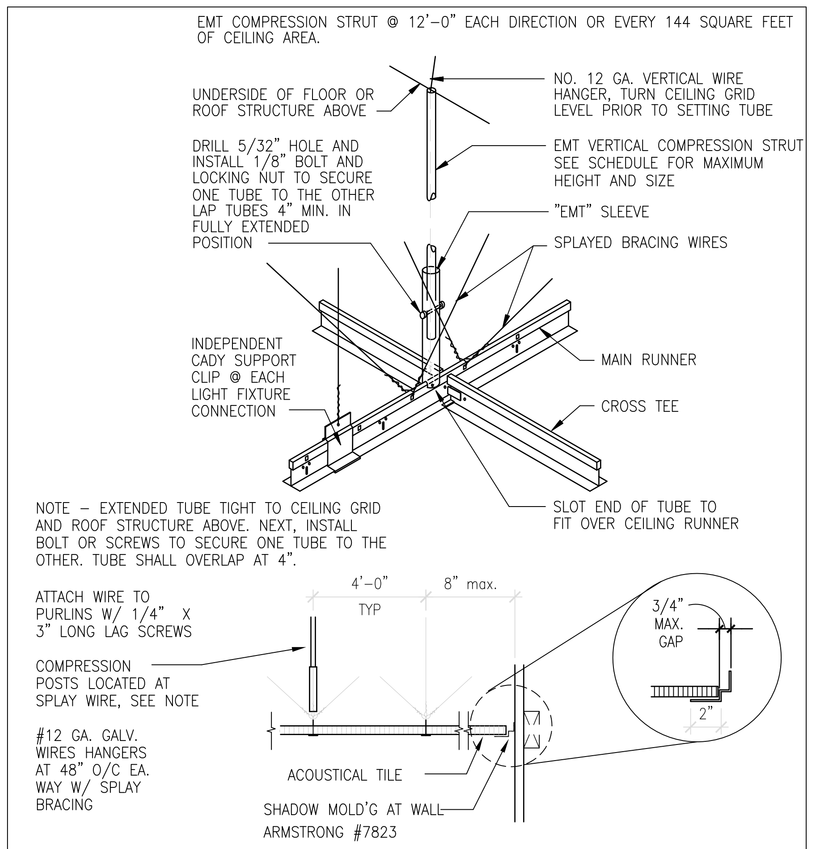

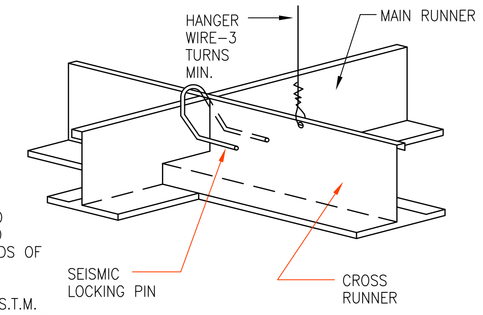

NOTES:

1. WIRE HANGERS MAY BE ATTACHED TO RAFTERS OR SUB–PURUNS PROVIDED ATTACHMENT IS WITHIN 1'–6" OF ENDS OF RAPTERS.
2. INSTALLATION SHALL CONFORM TO A.S.T.M. NO. E580–76 FOR STANDARD RECOMMENDED PRACTICE FOR AREAS REQUIRING SEISMIC RESTRIANT.
3. LATERAL FORCE BRACING SHALL NOT EXCEED 12'–0" O/C BOTH DIRECTIONS WITH FIRST POINT WITHIN 4' FROM EACH WALL.
4. CHICAGO METTALLIC LARR 24299 AND ICC–ESR–2631
5. FOR SEISMIC JOINT CLIP SEE DET. 3/–
6. FOR MORE INFORMATION SEE ARCH. DWG.

EMT STRUT SCHEDULE	
SIZE (DIAMETER)	L (MAX. LENGTH)
3/4"	4'–0"
1"	6'–0"
1 1/4"	8'–0"
1 1/2"	10'–0"

NOTE:
AS ALTERNATE USE METAL STUD 'C362S137–33' AS STRUT TO A MAXIMUM OF 10'–0".

1 SUSP. CEIILING DETAIL (LAT. BRACING)
SCALE: N.T.S.

suspension systems

Armstrong Seismic Joint Clip Installation Details

Armstrong

It's simple to install with these easy steps:

How to install the Seismic Separation Joint Clip.

Step One: Install suspension system completely, in a conventional manner.

Step Two: Decide upon which run(s) of Main Runners to create the seismic separation. **NOTE:** the Seismic Joint Clip allows for cross-tees to move along the axis of the cross-tees. **NOTE:** Divide 2500 SF by the length of the run of mains in feet. The result will be the maximum spacing, in feet, for the separation joint. Round this result down to the nearest 4' increment when mains are installed 4' on center.

Step Three: Attach two adjacent sides of each section of the divided ceiling to the structure. Where these sections touch the wall the attachment may be by riveting to the wall molding or by means of the BERC2 clip with a tight screw. Sections that do not touch walls on two adjacent sides must be braced to structure.

Step Four: Cut XL through the end details of cross-tees inserted into Main Runner designated for the Seismic Separation. **NOTE:** This should be done one intersection at a time or the grid system will fall apart.

Step Five: Assemble the two sides of Joint clip into one unit.

Step Six: Snap completed assembly over the bulb of the Main Runner at the intersection of the cross-tees.

Step Seven: Insert a 1/4" long #10 screw through slot in clip, into the upper XL clip stake hole. Use vertical stamp mark below the horizontal slot to properly position the screw within the clip. Install one screw from each side of the assembled clip to hold the proper shape. Do not allow screw threads to strip out the stake hole.

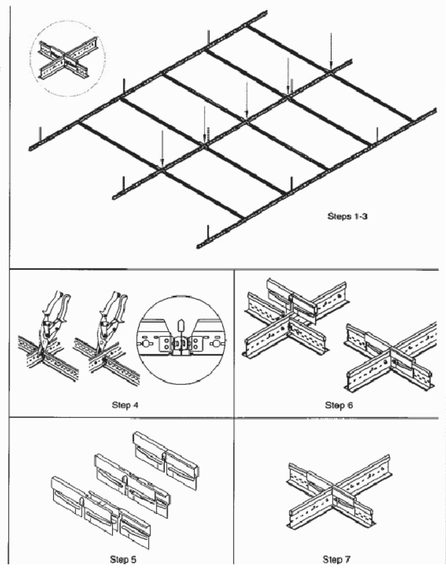

2 SUSP. CEIILING DETAIL (LAT. BRACING)
SCALE: N.T.S.

Armstrong

Armstrong Seismic Joint Clip

The Armstrong Seismic Joint Clip works with Armstrong 15/16" and 9/16" grid systems, including Prelude®, Suprafine® and Silhouette®.

Key Selection Attributes

- Armstrong conducted full-scale testing at the State University of New York, University at Buffalo which provides evidence of performance in IBC Category D, E, and F installations
- SJCG gives architects and designers a clean look and saves contractors time with a reliable installation method.
- Installs in minutes, no need to cut the face of the grid to install clip
- Eliminates the need for additional hanger wires
- Lower material costs than many other common systems
- Maintains integrity of ceiling module
- Not visible from below
- Easier to keep grid system square
- Allows the use of full size panels

Product Description

Materials
A. General: Commercial-quality cold rolled hot dipped galvanized steel, chemically cleansed.
B. Components: Seismic Joint Clip, stamped, unfinished, two piece unit w/slots.

NOTE: Not suitable for use with Vector® panels.

Item #	Description	Dimension	Color/Finish
☐ SJCG	Seismic Joint Clip 2 pcs required/joint	5" x 1-1/2" nominal	Unpainted

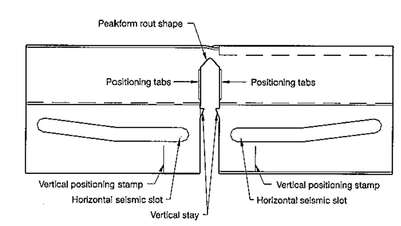

Feature	Benefit
Horizontal Seismic Slot	Allows cross tee to move along its axis. Properly repositions within Main Runner
Vertical Stay	Limits upward movement or dislodgement of clip
Positioning Tabs	Maintains clip position square to the axis of Main Runner
PeakForm Rout Shape	Accomodates shape of Armstrong suspension systems
Vertical Positioning Stamp	Facilitates proper location of fastener within the Horizontal Seismic Slot

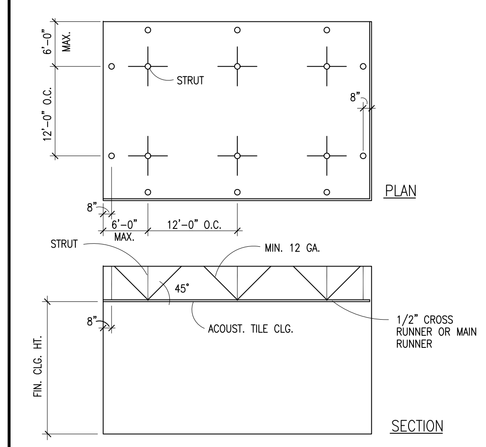

5 SUSPENDED CEILING STRUT LAYOUT
SCALE: N.T.S.

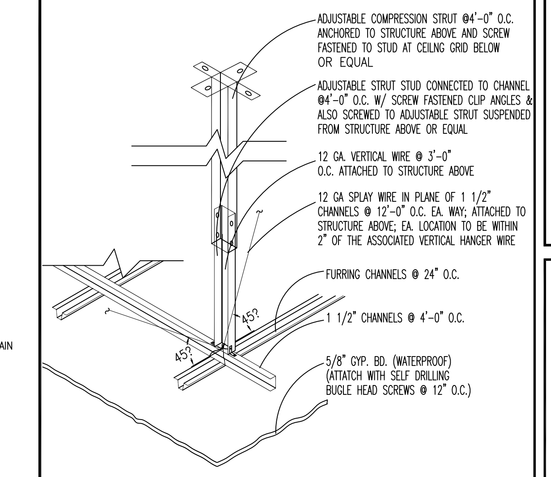

6 SUSPENDED GYP. BD. CEILING
SCALE: N.T.S.

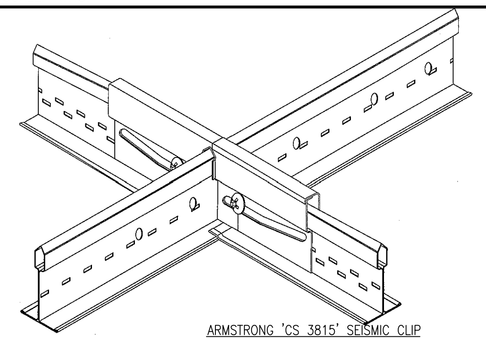

3 SEISMIC JOINT CLIP
SCALE: N.T.S.

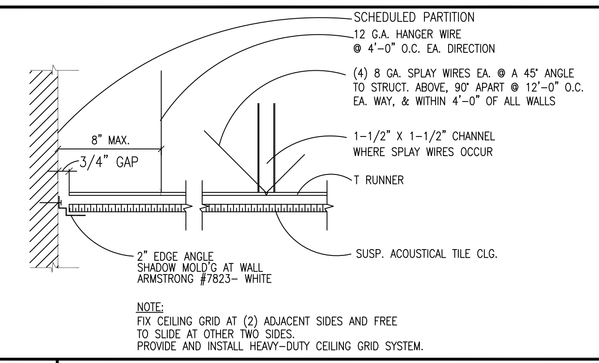

NOTE:
FIX CEILING GRID AT (2) ADJACENT SIDES AND FREE TO SLIDE AT OTHER TWO SIDES.
PROVIDE AND INSTALL HEAVY–DUTY CEILING GRID SYSTEM.

4 SUSPENDED CEILING EDGE TRIM
SCALE: NONE

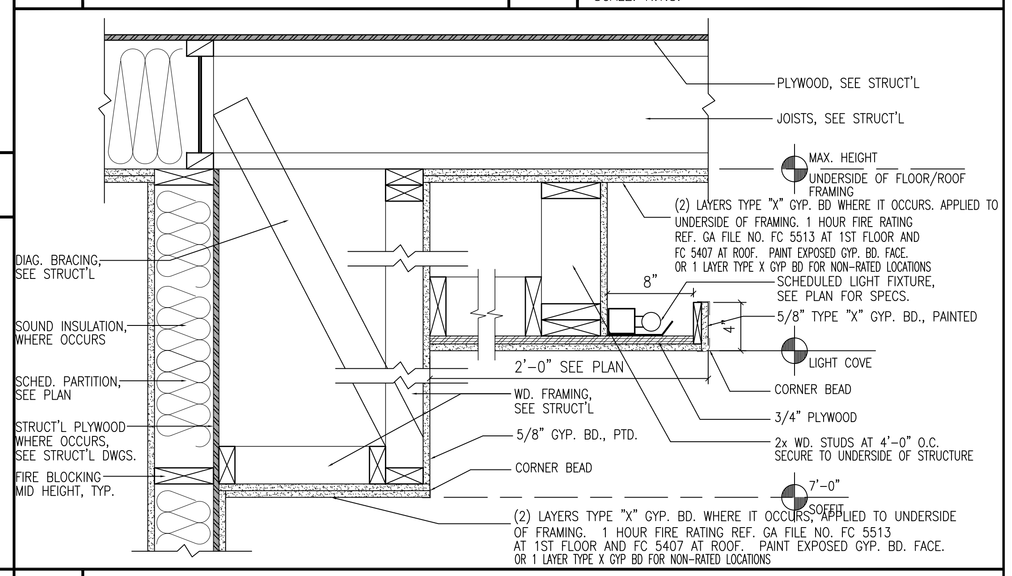

7 SUSPENDED CEILING EDGE TRIM
SCALE: 1 1/2"=1'-0"

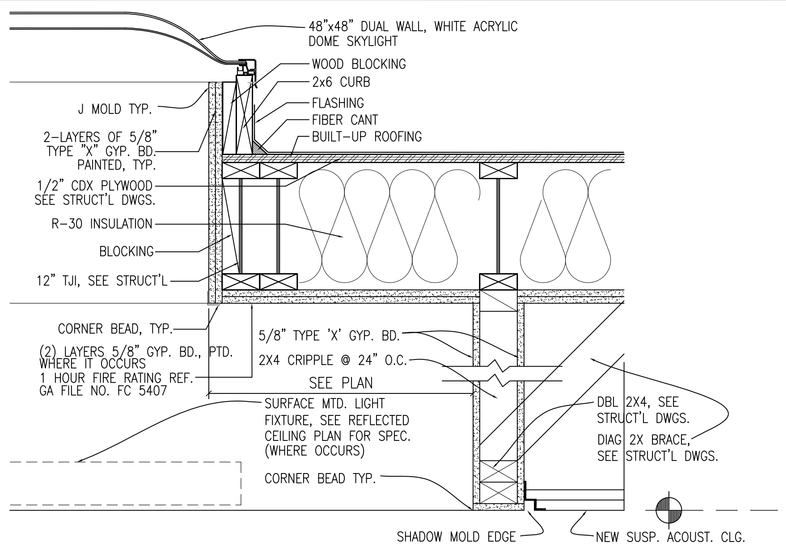

8 GYP. BD. HEADER/SUSP. CLG. TRANSITION
SCALE: 1 1/2" = 1'-0"

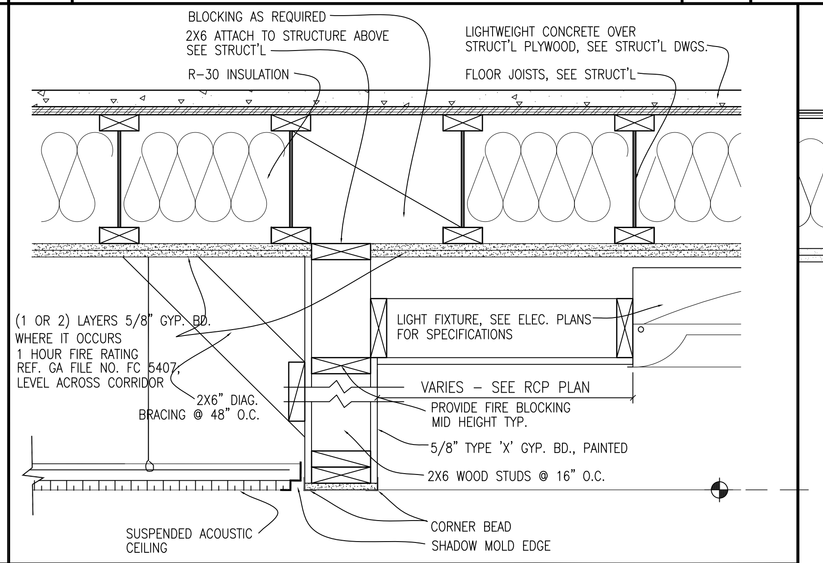

9 GYP. BD. HEADER/SUSP. CLG. TRANSITION W/LIGHT FIXTURE
SCALE: 1 1/2" = 1'-0"

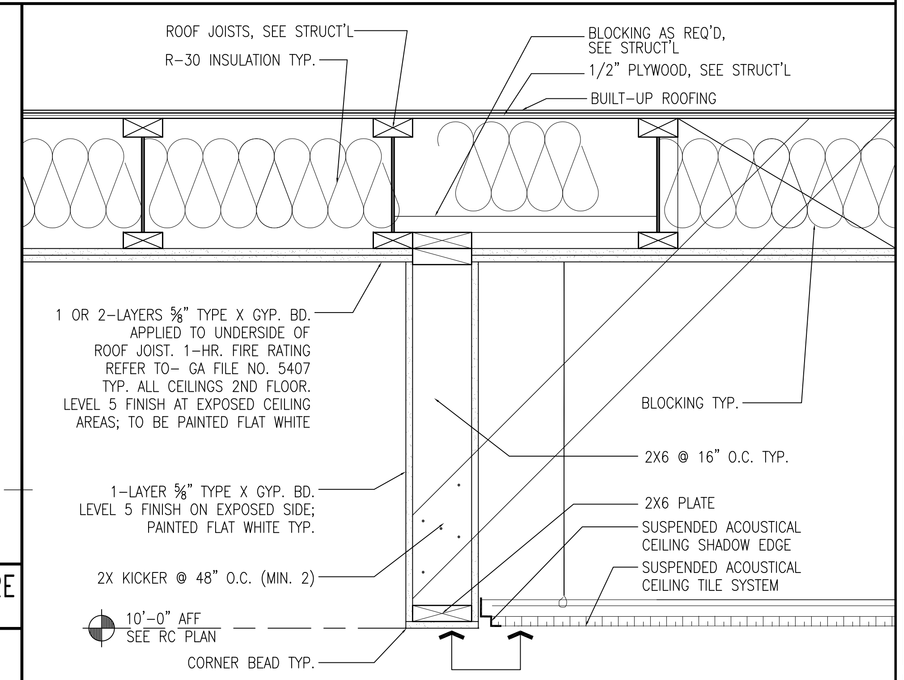

10 GYP. BD. CEILING/SUSP. CLG. TRANSITION
SCALE: 1 1/2" = 1'-0"

FRANCO ARCHITECTS INC.
12345 Ventura Blvd. H
Studio City, CA 91604
Tel 818 754-2030
Fax 818 754-2032
Architecture and Planning

MAGNOLIA SCIENCE ACADEMY
18220 SHERMAN WAY, RESEDA, CA91335

REV	DESCRIPTION	DATE
	PLAN CHECK #1	6/14/2017

LICENSED ARCHITECT
JOHANN D. WANG
C27010
4/30/2019
RENEWAL DATE
STATE OF CALIFORNIA

PROJECT
MAGNOLIA SCIENCE ACADEMY

PROJECT ADDRESS
18220 SHERMAN WAY, RESEDA, CA91335

DRAWING TITLE
DETAILS

DRAWN BY
ISSUE DATE 6/14/2017
JOB NUMBER
DRAWING SCALE AS NOTED
APPROVED BY:

DRAWING NUMBER
D4.0

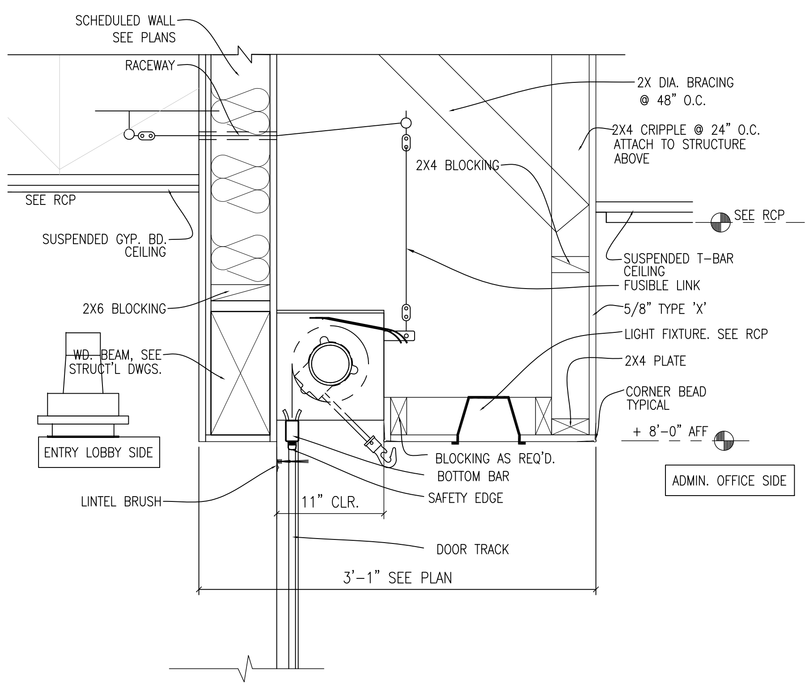

1 FACE MTD. ROLL-UP CNTR. FIRE DOOR
SCALE: 1 1/2"=1'-0"

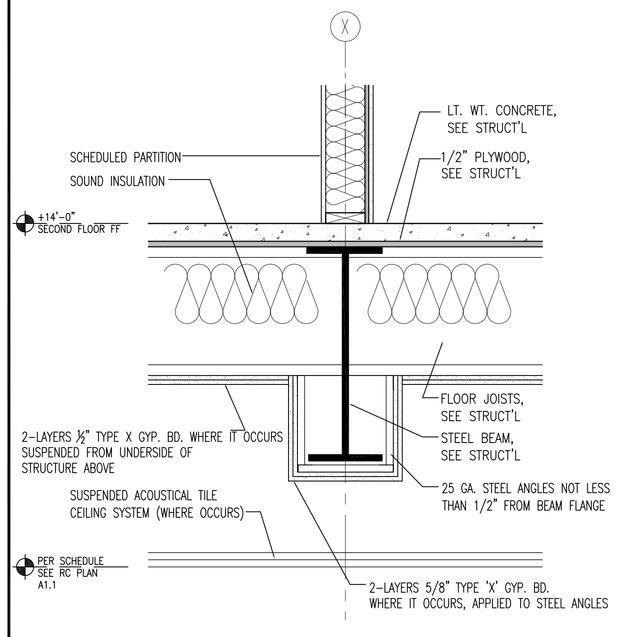

2 FIRE-RATED STEEL BEAM ENCLOSURE (TYP.)
SCALE: 1"=1'-0"

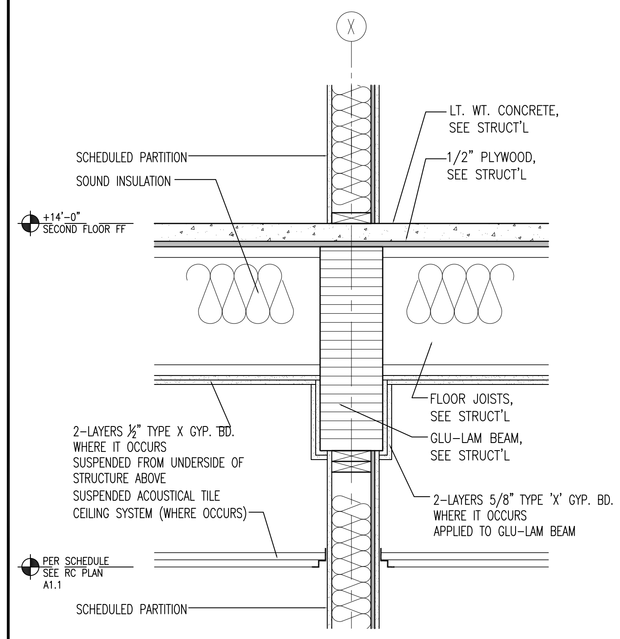

3 FIRE-RATED GLU-LAM BEAM ENCLOSURE (TYP.)
SCALE: 1"=1'-0"

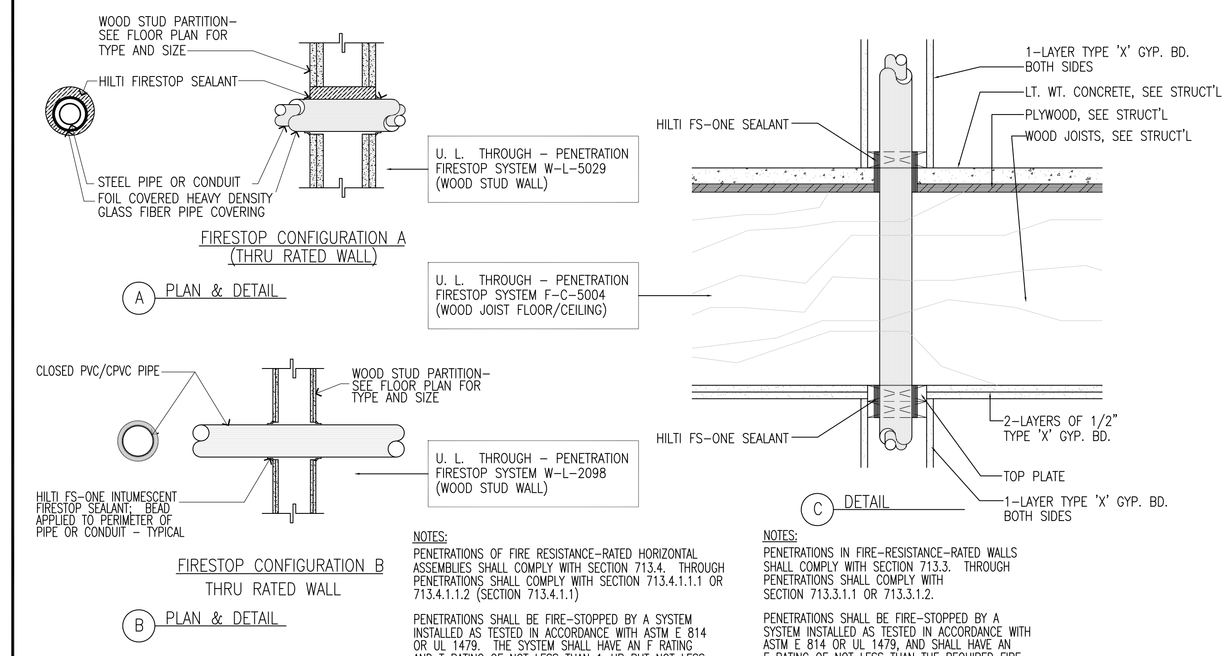

NOTES:
PENETRATIONS OF FIRE RESISTANCE-RATED HORIZONTAL ASSEMBLIES SHALL COMPLY WITH SECTION 713.4. THROUGH PENETRATIONS SHALL COMPLY WITH SECTION 713.4.1.1.1 OR 713.4.1.1.2 (SECTION 713.4.1.1)

PENETRATIONS SHALL BE FIRE-STOPPED BY A SYSTEM INSTALLED AS TESTED IN ACCORDANCE WITH ASTM E 814 OR UL 1479. THE SYSTEM SHALL HAVE AN F RATING AND T RATING OF NOT LESS THAN 1-HR BUT NOT LESS THAN THE REQUIRED RATING OF THE FLOOR PENETRATION. (SECTION 713.4.1.1.2)

NOTES:
PENETRATIONS IN FIRE-RESISTANCE-RATED WALLS SHALL COMPLY WITH SECTION 713.3. THROUGH PENETRATIONS SHALL COMPLY WITH SECTION 713.3.1.1 OR 713.3.1.2.

PENETRATIONS SHALL BE FIRE-STOPPED BY A SYSTEM INSTALLED AS TESTED IN ACCORDANCE WITH ASTM E 814 OR UL 1479, AND SHALL HAVE AN F RATING OF NOT LESS THAN THE REQUIRED FIRE-RESISTANCE-RATING OF THE WALL PENETRATED. (SECTION 713.3.1.2)

4 TYPICAL FIRESTOP DETAILS
SCALE: 1 1/2" = 1'-0"

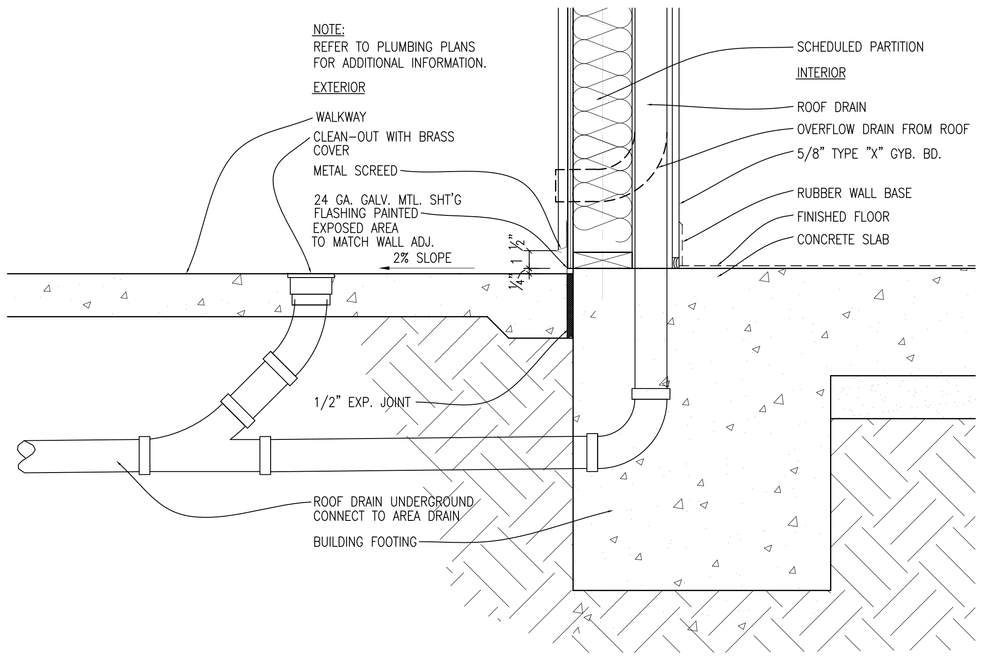

5 ROOF DRAIN/OVERFLOW DRAIN DETAIL
SCALE: 1 1/2"=1'-0"

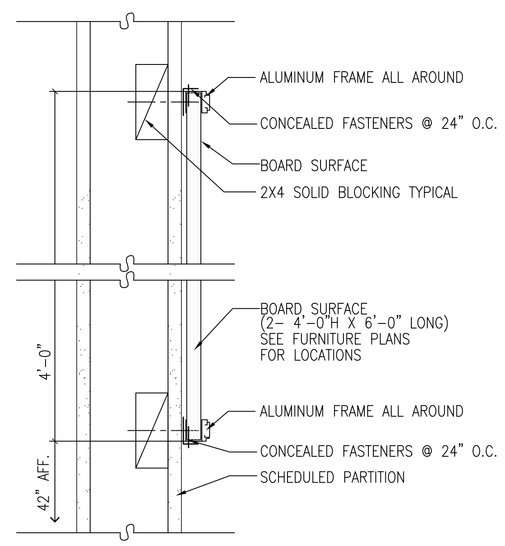

6 WHITEBOARD DETAIL
SCALE: 3" = 1'-0"

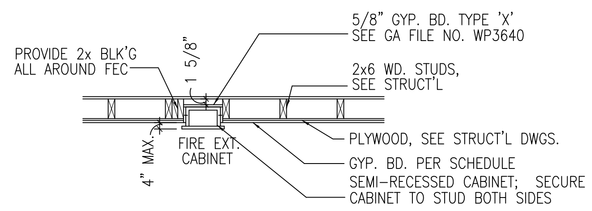

7 FIRE EXTINGUISHER PLAN/SECTION
SCALE: N.T.S.

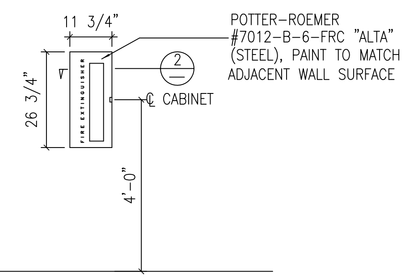

8 FIRE EXTINGUISHER ELEVATION
SCALE: N.T.S.

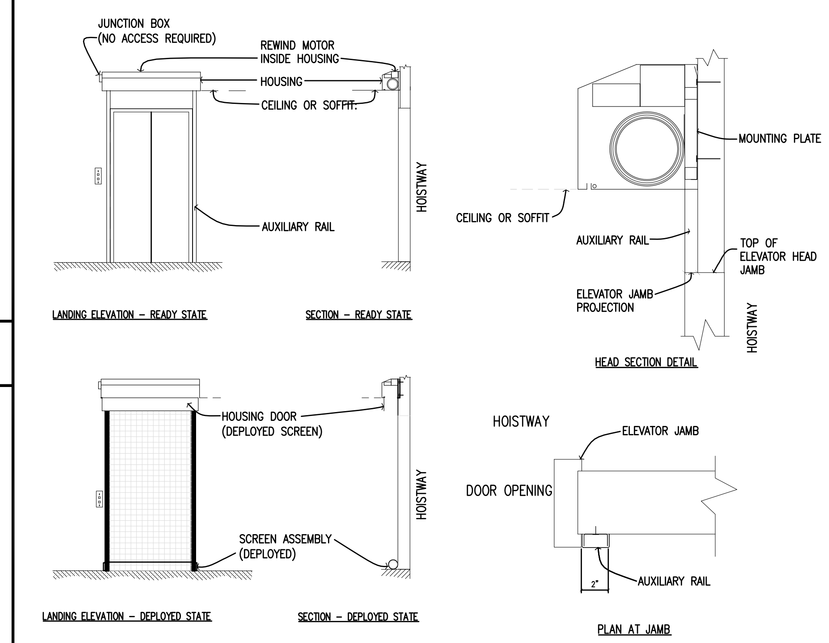

SMOKE GUARD SYSTEM BY SMOKE GUARD, M200, ESR-1136
NOTE: INSTALL SMOKE GUARD AS REQUIRED PER SECTION 708.4.1

9 SMOKE GUARD DETAILS
SCALE: N.T.S.

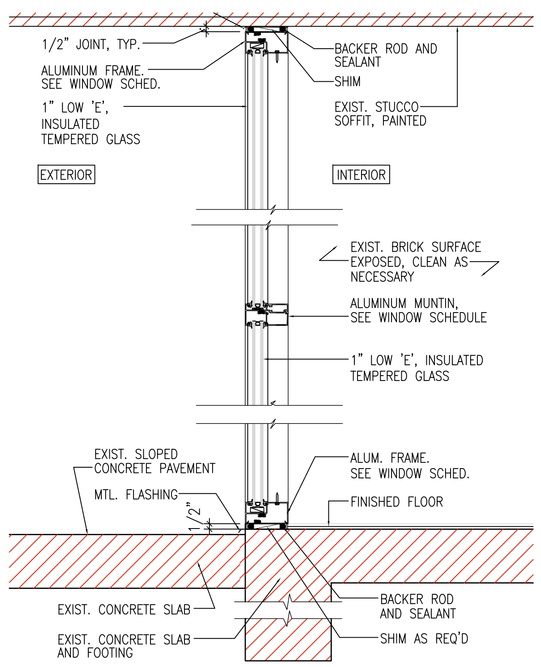

10 SECTION @ STOREFRONT GLASS
SCALE: 1 1/2" = 1'-0"

FRANCO ARCHITECTS INC.
12345 Ventura Blvd. H
Studio City, CA 91604
Tel 818 754-2030
Fax 818 754-2032
Architecture and Planning

MAGNOLIA SCIENCE ACADEMY
18220 SHERMAN WAY, RESEDA, CA91335

REV	DESCRIPTION	DATE
	PLAN CHECK #1	6/14/2017

LICENSED ARCHITECT JOHANN D. WANG C27010 4/30/2019 RENEWAL DATE STATE OF CALIFORNIA

PROJECT
MAGNOLIA SCIENCE ACADEMY

PROJECT ADDRESS
18220 SHERMAN WAY, RESEDA, CA91335

DRAWING TITLE
DETAILS

DRAWN BY
ISSUE DATE 6/14/2017
JOB NUMBER
DRAWING SCALE AS NOTED
APPROVED BY:

DRAWING NUMBER
D5.0

ONLINE CERTIFICATIONS DIRECTORY

Design No. U344
BXUV.U344
Fire-resistance Ratings - ANSI/UL 263

Page Bottom

Design/System/Construction/Assembly Usage Disclaimer

- Authorities Having Jurisdiction should be consulted in all cases as to the particular requirements covering the installation and use of UL Certified products, equipment, system, devices, and materials.
- Authorities Having Jurisdiction should be consulted before construction.
- Fire resistance assemblies and products are developed by the design submitter and have been investigated by UL for compliance with applicable requirements. The published information cannot always address every construction nuance encountered in the field.
- When field issues arise, it is recommended the first contact for assistance be the technical service staff provided by the product manufacturer noted for the design. Users of fire resistance assemblies are advised to consult the general Guide Information for each product category and each group of assemblies. The Guide Information includes specifics concerning alternate materials and alternate methods of construction.
- Only products which bear UL's Mark are considered Certified.

Fire-resistance Ratings - ANSI/UL 263

See General Information for Fire-resistance Ratings - ANSI/UL 263

Design No. U344

October 14, 2013

Bearing Wall Rating — 1 Hr.

Finish Rating — 26 Min.

Load Restricted for Canadian Applications — See Guide BXUV7

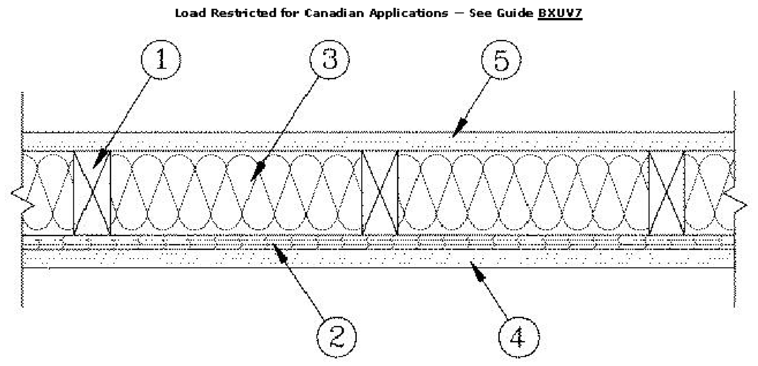

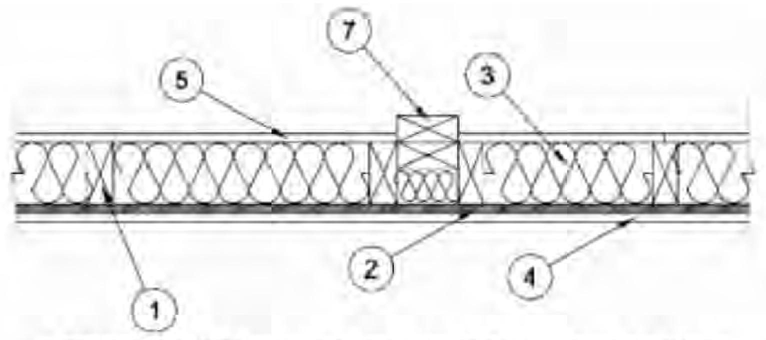

1. **Wood Studs** — Nom 2 by 4 in. spaced 24 in. OC, laterally braced, and effectively fire stopped at top and bottom.

2. **Wood Structural Panel Sheathing** — Nom 15/32 in. thick, 4 ft wide APA Rated Sheathing 32/16. Exposure 1, plywood or oriented strand board (OSB) per PS1, PS2 or APA Standard PRP-108. Installed with long dimension of sheet (strength axis) or face grain of plywood, parallel with studs. Vertical joints centered on studs, and staggered one stud space from wallboard joints. Horizontal joints backed with nom 2 by 4 in. wood backing. Attached to studs on exterior side of wall with 6d cement coated steel box nails spaced 12 in. OC along interior studs and 6 in. OC at perimeter of panels.

3. **Batts and Blankets*** — 3-1/2 in. thick foil-faced glass fiber batts. Supplied in rolls 23 in. wide. Density to be nom 0.70 pcf. Placed in stud cavity and secured to studs with 5/8 in. long steel staples spaced nom 12 in. OC

See Batts and Blankets* (BZJZ) category for names of Classified Companies.

3A. **Fiber, Sprayed*** — As an alternate to Batts and Blankets (Item 3) — Spray applied cellulose material. The fiber is applied with water to completely fill the enclosed cavity in accordance with the application instructions supplied with the product with a nominal dry density of 2.7 lb/ft³. Alternate Application Method: The fiber is applied without water or adhesive at a nominal dry density of 3.5 lb/ft³, in accordance with the application instructions supplied with the product.

U S GREENFIBER L L C — INS735 & INS745 for use with wet or dry application. INS510LD, INS515LD, INS541LD, INS735, INS745, INS765LD, and INS770LD are to be used for dry application only.

3B. **Fiber, Sprayed*** — As an alternate to Item 3 and 3A — Spray applied cellulose material. The fiber is applied with water to completely fill the enclosed cavity in accordance with the application instructions supplied with the product. Nominal dry density of 4.58 lb/ft³.

NU-WOOL CO INC — Cellulose Insulation

3C. **Fiber, Sprayed*** — As an alternate to Batts and Blankets (Item 3) - Spray applied cellulose fiber. The fiber is applied with water to completely fill the enclosed cavity in accordance with the application instructions supplied with the product. The minimum dry density shall be 4.30 lbs/ft³.

INTERNATIONAL CELLULOSE CORP — Celbar-RL

4. **Gypsum Board*** — 5/8 in. thick, 4 ft wide, applied horizontally or vertically. Attached to studs through plywood sheathing with 8d cement coated nails 2-3/8 in. long, 0.113 in. shank diam., 9/32 in. diam head nails spaced 7 in. OC along studs and at perimeter of panels. When used in widths other than 48 in., wallboard is to be installed horizontally. Joints exposed or covered with tape and compound.

When Item 6, **Steel Framing Members***, is used, gypsum panels attached to furring channels with 1 in. long Type S bugle-head steel screws spaced 12 in. OC.

AMERICAN GYPSUM CO — Types AGX-1, M-Glass, AG-C.

CERTAINTEED GYPSUM INC — Type C or Type X (Finished Rating is 23 minutes) Type EGRG, Type GlasRoc.

CERTAINTEED GYPSUM CANADA INC — Type C or Type X (Finished Rating is 23 minutes).

CGC INC — Type AR, C, IP-X2, IPC-AR, SCX, SHX, ULX, WRC, WRX.

GEORGIA-PACIFIC GYPSUM L L C — Types TG-C, Type X, Veneer Plaster Base - Type X, Water Rated - Type X, Sheathing - Type X, Soffit - Type X, GreenGlas Type X.

LAFARGE NORTH AMERICA INC — Types LGFC6, LGFC6A, LGFC-C, LGFC-C/A.

NATIONAL GYPSUM CO — Type FSW-6 (finish rating 20 min).

PABCO BUILDING PRODUCTS L L C, DBA PABCO GYPSUM — Types PG-11, PGS-WRS.

THAI GYPSUM PRODUCTS PCL — Type C or Type X

UNITED STATES GYPSUM CO — Types AR, C, FRX-G, IP-X2, IPC-AR, WRC, SCX, SHX, ULX, USGX or WRX.

USG MEXICO S A DE C V — Type AR, C, IP-X2, IPC-AR, SCX, SHX, ULX, WRC or WRX.

4A. **Gypsum Board*** — (As an alternate to Item 4) - 5/8 in. thick, 4 ft. wide, paper surfaced applied vertically and secured as described in Item 4.

GEORGIA-PACIFIC GYPSUM L L C — Type X ComfortGuard Sound Deadening Gypsum Board (finish rating 27 min).

4B. **Wall and Partition Facings and Accessories*** — (As an alternate to Items 4, 4A) — Nominal 5/8 in. thick, 4 ft wide panels, applied vertically only and secured as described in Item 4.

SERIOUS ENERGY INC — Type QuietRock ES, Type QuietRock QR-527.

5. **Gypsum Board*** — 5/8 in. thick, 4 ft wide applied horizontally or vertically. Attached to studs or blocking at 7 in. OC with 6d cement coated nails, 1-7/8 in. long, 0.0915 in. shank diam and 1/4 in. diam heads. When used in widths other than 48 in., wallboard to be installed horizontally. Joints exposed or covered with tape and compound.

When Item 6-6B, **Steel Framing Members***, is used, gypsum panels attached to furring channels with 1 in. long Type S bugle-head steel screws spaced 12 in. OC.

AMERICAN GYPSUM CO — Types AGX-1, M-Glass, AG-C.

CGC INC — Type AR, C, IP-X1, IP-X2, IPC-AR, SCX, ULX, WRX.

GEORGIA-PACIFIC GYPSUM L L C — Type TG-C, GreenGlass Type X.

LAFARGE NORTH AMERICA INC — Types LGFC6, LGFC6A, LGFC-C, LGFC-C/A.

NATIONAL GYPSUM CO — Type FSW-6 (finish rating 20 min).

PABCO BUILDING PRODUCTS L L C, DBA PABCO GYPSUM — Types PG-11, PGS-WRS.

UNITED STATES GYPSUM CO — Type AR, C, FRX-G, IP-X1, IP-X2, IPC-AR, SCX, ULX, USGX or WRX.

USG MEXICO S A DE C V — Type AR, C, IP-X1, IP-X2, IPC-AR, SCX, ULX, or WRX.

5A. **Gypsum Board*** — As an alternate to Item 5 - (not shown) - 5/8 in. thick gypsum panels, with beveled, square, or tapered edges, applied either horizontally or vertically. Gypsum panels fastened to framing with 1-1/4 in. long Type W coarse thread gypsum panel steel screws spaced a max 8 in. OC, with last screw 1 in. from edge of board. When used in widths of other than 48 in., gypsum boards are to be installed horizontally. Joints exposed or covered with tape and compound.

AMERICAN GYPSUM CO — Types AGX-1, M-Glass, AG-C (Finished Rating is 25 minutes).

CERTAINTEED GYPSUM INC — Type C or Type X (Finished Rating is 23 minutes) Type EGRG, Type GlasRoc.

CERTAINTEED GYPSUM CANADA INC — Type C or Type X (Finished Rating is 23 minutes).

CGC INC — Type AR, C, IP-X2, IPC-AR, SCX, SHX, ULX, WRC or WRX. (Finished Rating is 24 minutes).

THAI GYPSUM PRODUCTS PCL — Type C or Type X

UNITED STATES GYPSUM CO — Type AR, C, FRX-G, IP-X1, IP-X2, IPC-AR, SCX, ULX, USGX or WRX. (Finished Rating is 24 minutes).

USG MEXICO S A DE C V — Type AR, C, IP-X1, IP-X2, IPC-AR, SCX, ULX, or WRX. (Finished Rating is 24 minutes).

5B. **Gypsum Board*** — (As an alternate to Items 5 and 5A) — 5/8 in. thick gypsum panels, with square edges, applied either horizontally or vertically. Gypsum panels fastened to framing with 1-1/4 in. long Type W coarse thread gypsum panel steel screws spaced a max 8 in. OC, with last 2 screws 1 and 4 in. from edge of board or nailed as described in Item 5. When used in widths of other than 48 in., gypsum boards are to be installed horizontally.

GEORGIA-PACIFIC GYPSUM L L C — GreenGlas Type X.

5C. **Gypsum Board*** — (As an alternate to Items 5 through 5B) - 5/8 in. thick, 4 ft. wide, paper surfaced applied vertically and secured as described in Item 5.

GEORGIA-PACIFIC GYPSUM L L C — Type X ComfortGuard Sound Deadening Gypsum Board (finish rating 27 min).

5D. **Wall and Partition Facings and Accessories*** — (As an alternate to Items 5 through 5C) — Nominal 5/8 in. thick, 4 ft wide panels, applied vertically only and secured as described in Item 5.

SERIOUS ENERGY INC — Type QuietRock ES, Type QuietRock QR-527.

6. **Steel Framing Members** — (Optional, Not Shown)* — Furring Channels and Steel Framing Members as described below:

a. **Furring Channels** — Formed of No. 25 MSG galv steel. 2-9/16 in. or 2-23/32 in. wide by 7/8 in. deep, spaced 24 in. OC perpendicular to studs. Channels secured to studs as described in Item b. Ends of adjoining channels are overlapped 6 in. and tied together with double strand of No. 18 SWG galv steel wire near each end of overlap. As an alternate, ends of adjoining channels may be overlapped 6 in. and secured together with two self-tapping #6 framing screws, min. 7/16 in. long at the midpoint of the overlap, with one screw on each flange of the channel. Gypsum board attached to furring channels as described in Items 4 and 5.

b. **Steel Framing Members*** — Used to attach furring channels (Item 6a) to studs . Clips spaced 48 in. OC., and secured to studs with No. 8 x 2-1/2 in. coarse drywall screw through the center grommet. Furring channels are friction fitted into clips. . RSIC-1 clip for use with 2-9/16 in. wide furring channels. RSIC-1 (2.75) clip for use with 2-23/32 in. wide furring channels.

PAC INTERNATIONAL INC — Types RSIC-1, RSIC-1 (2.75).

6A. **Steel Framing Members*** — (Optional, Not Shown) — Furring channels and Steel Framing Members as described below:

a. **Furring Channels** — Formed of No. 25 MSG galv steel. 2-3/8 in. wide by 7/8 in. deep, spaced 24 in. OC perpendicular to studs. Channels secured to studs as described in Item b. Ends of adjoining channels are overlapped 6 in. and tied together with double strand of No. 18 SWG galv steel wire near each end of overlap. As an alternate, ends of adjoining channels may be overlapped 6 in. and secured together with two self-tapping #6 framing screws, min. 7/16 in. long at the midpoint of the overlap, with one screw on each flange of the channel. Gypsum board attached to furring channels as described in Item 5.

b. **Steel Framing Members*** — Used to attach furring channels (Item a) to studs. Clips spaced 48 in. OC. Genie clips secured to studs with No. 8 x 1-1/2 in. coarse drywall screw through the center hole. Furring channels are friction fitted into clips.

PLITEQ INC — Type Genie Clip

6B. **Steel Framing Members** — (Optional, Not Shown)* — Furring channels and resilient sound isolation clip as described below:

a. **Furring Channels** — Formed of No. 25 MSG galv steel. Spaced 24 in. OC perpendicular to studs. Channels secured to studs as described in Item b. Ends of adjoining channels overlapped 6 in. and secured together with four self-tapping No. 8x1/2 Self Drilling screws (2 per side 1 in. and 4 in. from overlap edge). Gypsum board attached to furring channels as described in Item 5. Side joint furring channels shall be attached to studs with RESILMOUNT Sound Isolation Clips - Type A237R located approximately 2 in. from each end of length of channel. Both Gypsum Boards at side joints fastened into channel with screws spaced 8 in. OC, approximately 1/2 in. from joint edge.

b. **Steel Framing Members*** — Resilient sound isolation clip used to attach furring channels (Item 6Ba) to studs. Clips spaced 24 in. OC., and secured to studs with No. 10 x 2-1/2 in. coarse drywall screw through the center hole. Furring channels are friction fitted into clips.

STUDCO BUILDING SYSTEMS — RESILMOUNT Sound Isolation Clips - Type A237R

7. **Non-Bearing Wall Partition Intersection** — (Optional) Two nominal 2 by 4 in. stud or nominal 2 by 6 in. stud nailed together with two 3-1/2 in. long 10d nails spaced a max. 16 in. OC. vertically and fastened to one side of the minimum 2 by 4 in. stud with 3 in. long 10d nails spaced a max 16 in. OC. vertically. Intersection between partition wood studs to be flush with the 2 by 4 in. studs. The wall partition wood studs are to be framed by with a second 2 by 4 in. wood stud fastened with 3 in. long 10d nails spaced a max. 16 in. OC. vertically. Maximum one non-bearing wall partition intersection per stud cavity. Non-bearing wall partition stud depth shall be at a minimum equal to the depth of the bearing wall.

*Bearing the UL Classification Mark

Last Updated on 2013-10-14

Questions? Print this page Terms of Use Page Top

© 2013 UL LLC

When the UL Leaf Mark is on the product, or when the word "Environment" is included in the UL Mark, please search the UL Environment database for additional information regarding this product's certification.

The appearance of a company's name or product in this database does not in itself assure that products so identified have been manufactured under UL's Follow-Up Service. Only those products bearing the UL Mark should be considered to be Certified and covered under UL's Follow-Up Service. Always look for the Mark on the product.

UL permits the reproduction of the material contained in the Online Certification Directory subject to the following conditions: 1. The Guide Information, Assemblies, Constructions, Designs, Systems, and/or Certifications (files) must be presented in their entirety and in a non-misleading manner, without any manipulation of the data (or drawings). 2. The statement "Reprinted from the Online Certifications Directory with permission from UL" must appear adjacent to the extracted material. In addition, the reprinted material must include a copyright notice in the following format: "© 2013 UL LLC".

1 FIRE-RATED WALL DESIGN NO. U344
SCALE: N.T.S.

ONLINE CERTIFICATIONS DIRECTORY

Design No. U305
BXUV.U305
Fire-resistance Ratings - ANSI/UL 263

Page Bottom

Design/System/Construction/Assembly Usage Disclaimer

- Authorities Having Jurisdiction should be consulted in all cases as to the particular requirements covering the installation and use of UL Certified products, equipment, system, devices, and materials.
- Authorities Having Jurisdiction should be consulted before construction.
- Fire resistance assemblies and products are developed by the design submitter and have been investigated by UL for compliance with applicable requirements. The published information cannot always address every construction nuance encountered in the field.
- When field issues arise, it is recommended the first contact for assistance be the technical service staff provided by the product manufacturer noted for the design. Users of fire resistance assemblies are advised to consult the general Guide Information for each product category and each group of assemblies. The Guide Information includes specifics concerning alternate materials and alternate methods of construction.
- Only products which bear UL's Mark are considered Certified.

Fire-resistance Ratings - ANSI/UL 263

See General Information for Fire-resistance Ratings - ANSI/UL 263

Design No. U305

October 24, 2013

Bearing Wall Rating — 1 Hr

Finish Rating — See Items 3, 3A, 3D, 3E, 3F, 3G, 3H, 3J and 3L.

STC Rating - 56 (See Item 9)

Load Restricted for Canadian Applications — See Guide BXUV7

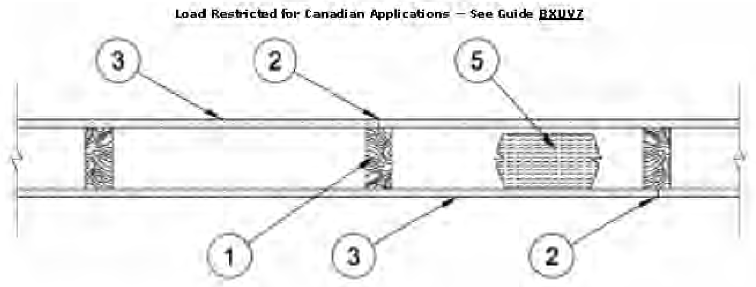

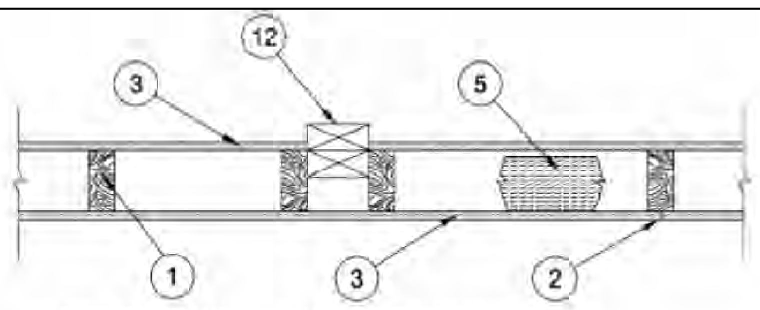

1. **Wood Studs** — Nom 2 by 4 in. spaced 16 in. OC max, effectively firestopped.

2. **Joints and Nail-Heads** — Joints covered with joint compound and paper tape. Joint compound and paper tape may be omitted when square edge boards are used. As an alternate, nom 3/32 in. thick gypsum veneer plaster may be applied to the entire surface of Classified veneer baseboard with the joints reinforced with paper tape. Nailheads exposed or covered with joint compound.

3. **Gypsum Board*** — 5/8 in. thick paper or vinyl surfaced, with beveled, square, or tapered edges, applied either horizontally or vertically. Gypsum panels nailed 7 in. OC with 6d cement coated nails 1-7/8 in. long, 0.0915 in. shank diam and 15/64 in. diam heads. When used in widths other than 48 in., gypsum panels are to be installed horizontally. For an alternate method of attachment of gypsum panels, refer to Item 6, 6A or 6B, **Steel Framing Members***.

When Item 6 ,6B, or 6C **Steel Framing Members***, are used, gypsum panels attached to furring channels with 1 in. long Type S bugle-head steel screws spaced 12 in. OC.

When Item 6A, **Steel Framing Members***, is used, two layers of gypsum panels attached to furring channels. Base layer attached to furring channels with 1 in. long Type S bugle-head steel screws spaced 12 in. OC. Face layer attached to furring channels with 1-5/8 in. long Type S bugle-head steel screws spaced 12 in. OC. All joints in face layers staggered with joints in base layers. One layer of gypsum board attached to opposite side of wood stud without furring channels as described in Item 3.

When Item 7, resilient channels are used, 5/8 in. thick, 4 ft wide gypsum panels applied vertically. Screw attached furring channels with 1 in. long, self-drilling, self-tapping Type S or S-12 steel screws spaced 8 in. OC. vertical joints located midway between studs.

ACADIA DRYWALL SUPPLIES LTD — Type X (finish rating 22 min)

AMERICAN GYPSUM CO — Types AGX-1(finish rating 23 min.), M-Glass (finish rating 23 min.), Type AGX-11 (finish rating 26 min), Type LightRoc (finish rating 22 min) or Type AG-C

BEIJING NEW BUILDING MATERIALS PUBLIC LTD CO — Type DBX-1 (finish rating 24 min).

CERTAINTEED GYPSUM INC — Type 1, Type SF3 (finish rating 20 min) or FRPC, Type C or Type X (finish rating 26 min), Type EGRG or GlasRoc (finish rating 23 min)

CERTAINTEED GYPSUM CANADA INC — Type C, Type X or Type Abuse-Resistant (finish rating 26 min)

CGC INC — Type AR (finish rating 24 min), Type C (finish rating 24 min), Type IP-AR (finish rating 24 min), Type IPC-AR (finish rating 24 min), Type IP-X1 (finish rating 24 min), Type IP-X2 (finish rating 24 min), Type SCX (finish rating 24 min), Type SHX (finish rating 24 min), Type ULX (finish rating 22 min), Type WRC (finish rating 24 min), Type WRX (finish rating 24 min).

GEORGIA-PACIFIC GYPSUM L L C — Type 5 (finish rating 26 min), Type 6 (finish rating 23 min), Type 9 (finish rating 26 min), Type C (finish rating 26 min), Type DGG (finish rating 20 min), Type GPFS1 (finish rating 20 min), Type GPFS2 (finish rating 20 min), Type GPFS6 (finish rating 26 min), Type DS, Type DAP, Type DD (finish rating 20 min), Type DA, Type DAPC, Type LS (finish rating 23 min), Type X, Veneer Plaster Base - Type X, Water Rated - Type X, Sheathing - Type X, Soffit - Type X, Type LWX (finish rating 22 min), Veneer Plaster Base - Type LWX (finish rating 22 min), Water Rated - Type LWX (finish rating 22 min), Sheathing - Type LWX (finish rating 22 min), Soffit - Type LWX (finish rating 22 min).

LAFARGE NORTH AMERICA INC — Type LGFC2 (finish rating 20 min), Type LGFC3 (finish rating 20 min), Type LGFC6 (finish rating 26 min), Type LGFC-C (finish rating 20 min), Type LGFC6A (finish rating 34 min), Type LGFC2A, Type LGFC-C/A, Type LGFC-WD, Type LGLLX (finish rating 21 min).

NATIONAL GYPSUM CO — Type FSK (finish rating 20 min), Type FSK-G (finish rating 20 min), Type FSW (finish rating 20 min), Type FSW-2 (finish rating 24 min), Type FSW-3 (finish rating 20 min), Type FSW-5 (finish rating 22 min), Type FSW-G (finish rating 20 min), Type FSK-C (finish rating 20 min), Type FSW-C (finish rating 20 min), Type FSMR-C, Type FSW-6 (finish rating 20 min), Type FSL (finish rating 24 min).

PABCO BUILDING PRODUCTS L L C, DBA PABCO GYPSUM — Types C, PG-2 (finish rating 20 min), PG-3 (finish rating 20 min), Types PG-3W, PG-5W (finish rating 20 min), Type PG-4 (finish rating 20 min), Type PG-6 (finish rating 23 min), Types PG-3WS, PG-5WS, PGS-WRS (finish rating 20 min), Types PG-5, PG-9 (finish rating 26 min), PG-11 or Type PG-C.

PANEL REY S A — Type GREX, PRX; Types RHX, MDX, ETX (finish rating 22 min)

SIAM GYPSUM INDUSTRY (SARABURI) CO LTD — Type EX-1 (finish rating 26 min)

THAI GYPSUM PRODUCTS PCL — Type C, Type X (finish rating 26 min)

UNITED STATES GYPSUM CO — Type AR (finish rating 24 min), Type C (finish rating 24 min), Type FRX-G (finish rating 29 min), Type IP-AR (finish rating 24 min), Type IPC-AR (finish rating 24 min), Type IP-X1 (finish rating 24 min), Type IP-X2 (finish rating 24 min), Type SHX (finish rating 24 min), Type SCX (finish rating 24 min), Type SGX (finish rating 24 min), Type ULX (finish rating 22 min), Type WRX (finish rating 24 min), Type WRC (finish rating 24 min).

USG MEXICO S A DE C V — Type AR (finish rating 24 min), Type C (finish rating 24 min), Type WRX (finish rating 24 min), Type WRC (finish rating 24 min), Type IP-X1 (finish rating 24 min), Type IP-X2 (finish rating 24 min), Type SHX (finish rating 24 min), SCX (finish rating 24 min), Type IP-AR (finish rating 24 min), Type IPC-AR (finish rating 24 min), Type ULX (finish rating 22 min).

3A. **Gypsum Board*** — (As an alternate to Item 3) — 5/8 in. thick gypsum panels, with beveled, square, or tapered edges, applied either horizontally or vertically. Gypsum panels fastened to framing with 1-1/4 in. long Type W coarse thread gypsum panel steel screws spaced a max 8 in. OC, with last screw 1 in. from edge of board. When used in widths of other than 48 in., gypsum boards are to be installed horizontally.

AMERICAN GYPSUM CO — Types AGX-1 (finish rating 25 min.), M-Glass (finish rating 25 min.), Type AG-C (finish rating 25 min.).

CGC INC — Type AR (finish rating 24 min), Type C (finish rating 24 min), Type IP-AR (finish rating 24 min), Type IPC-AR (finish rating 24 min), Type IP-X1 (finish rating 24 min), Type IP-X2 (finish rating 24 min), Type SCX (finish rating 24 min), Type SHX (finish rating 24 min), Type WRC (finish rating 24 min), Type WRX (finish rating 24 min).

UNITED STATES GYPSUM CO — Type AR (finish rating 24 min), Type SCX (finish rating 24 min), Type SGX (finish rating 24 min), Type C (finish rating 24 min), Type WRX (finish rating 24 min), Type WRC (finish rating 24 min), Type IP-X1 (finish rating 24 min), Type IP-X2 (finish rating 24 min), Type SHX (finish rating 24 min), Type FRX-G (finish rating 24 min), Type IP-AR (finish rating 24 min), Type IPC-AR (finish rating 24 min).

USG MEXICO S A DE C V — Type AR (finish rating 24 min), Type C (finish rating 24 min), Type WRX (finish rating 24 min), Type WRC (finish rating 24 min), Type IP-X1 (finish rating 24 min), Type IP-X2 (finish rating 24 min), Type SHX (finish rating 24 min), Type SCX, Type IP-AR (finish rating 24 min), Type IPC-AR (finish rating 24 min).

3B. **Gypsum Board*** — (As an alternate to Item 3) — Nom 3/4 in. thick, installed with 1-7/8 in. long cement coated nails as described in Item 3 or 1-3/8 in. long Type W coarse thread gypsum panel steel screws as described in Item 3A.

CGC INC — Types AR, IP-AR.

UNITED STATES GYPSUM CO — Types AR, IP-AR.

USG MEXICO S A DE C V — Types AR, IP-AR.

3C. **Gypsum Board*** — (As an alternate to Items 3, 3A and 3B) - 5/8 in. thick, 2 ft wide, tongue and groove edge, applied horizontally to one side of the assembly. Installed with 1-7/8 in. long cement coated nails as described in Item 3 or 1-1/4 in. long Type W coarse thread gypsum panel steel screws as described in Item 3A. Joint covering (Item 2) not required.

CGC INC — Type SHX.

UNITED STATES GYPSUM CO — Type SHX.

USG MEXICO S A DE C V — Type SHX.

3D. **Wall and Partition Facings and Accessories*** — (As an alternate to Items 3, 3A, 3B and 3C, not shown) - Nominal 5/8 in. thick, 4 ft wide panels, applied vertically to studs and bearing plates on one side of the assembly with 1-5/8 in. long Type S screws spaced 12 in. OC at perimeter of panels and 8 in. OC in the field. Horizontal joints of vertically applied panels need not be backed by studs. Panel joints covered with paper tape and two layers of joint compound. Screwheads covered with two layers of joint compound. Batts and Blankets placed in stud cavity as described in Item 5E. Not evaluated for use with Steel Framing Members, Furring Channels or Fiber, Sprayed.

SERIOUS ENERGY INC — Type QuietRock QR-530 (finish rating 23 min).

3E. **Gypsum Board*** — (As an alternate to Items 3, 3A, 3B, 3C, or 3D - not shown) For Direct Application to Studs Only- Nom 5/8 in. thick lead backed gypsum panels with beveled, square or tapered edges, applied vertically. Vertical joints centered over studs and staggered min 1 stud cavity on opposite sides of studs. Wallboard secured to studs with 1-5/8 in. long Type W coarse thread gypsum panel steel screws spaced 8 in. OC at perimeter and in the field. Lead batten strips required behind vertical joints of lead backed gypsum wallboard and optional at remaining stud locations. Lead batten strips, min 1-1/2 in. wide, max 10 ft long with a max thickness of 0.125 in. placed on the face of studs and attached to the stud with two 1 in. long Type S-12 pan head steel screws, one at the top of the strip and one at the bottom of the strip. Lead discs or tabs may be used in lieu of or in addition to the lead batten strips or optional at other locations. Max 3/4 in. diam by max 0.125 in. thick lead discs compression fitted or adhered over steel screw heads or max 1/2 in. by 1-1/4 in. by max 0.125 in. thick lead tabs placed on gypsum boards underneath screw locations prior to the installation of the screws. Lead batten strips to have a purity of 99.9% meeting the Federal specification QQ-L-201f, Grade "C".

RAY-BAR ENGINEERING CORP — Type RB-LBG (finish rating 24 min).

3F. **Gypsum Board*** — (As an alternate to Items 3, 3A, 3B, 3C, 3D, and 3E) — 5/8 in. thick gypsum panels, with square edges, applied either horizontally or vertically. Gypsum panels fastened to framing with 1-1/4 in. long Type W coarse thread gypsum panel steel screws spaced a max 8 in. OC, with last 2 screws 1 and 4 in. from edge of board or nailed 7 in. OC with 6d cement coated nails 1-7/8 in. long, 0.0915 in. shank diam and 15/64 in. diam heads. When used in widths of other than 48 in., gypsum boards are to be installed horizontally.

GEORGIA-PACIFIC GYPSUM L L C — GreenGlass Type X (finish rating 23 min).

3G. **Gypsum Board*** — (As an alternate to Items 3, 3A, 3B, 3C, 3D, 3E and 3F) - 5/8 in. glass-mat faced with square edges, applied either horizontally or vertically. Gypsum panels nailed 7 in. OC around the perimeter and in the field with 6d cement coated nails 1-7/8 in. long, 0.0915 in. shank diam and 15/64 in. diam heads. Nails shall be placed 1 inch and 3 inch from horizontal joints and 7 inch OC thereafter.

UNITED STATES GYPSUM CO — Type USGX (finish rating 22 min.)

3H. **Gypsum Board*** — (As an alternate to Items 3 through 3G) - 5/8 in. thick paper surfaced applied vertically. Gypsum panels nailed 7 in. OC with 6d cement coated nails 1-7/8 in. long, 0.0915 in. shank diam and 15/64 in. diam heads.

GEORGIA-PACIFIC GYPSUM L L C — Type X ComfortGuard Sound Deadening Gypsum Board (finish rating 27 min).

3I. **Gypsum Board*** — (As an alternate to Items 3) - Not to be used with items 6 or 7. 5/8 in. thick paper surfaced applied vertically only. Gypsum panels nailed 7 in. OC with 6d cement coated nails 1-7/8 in. long, 0.0915 in. shank diam and 15/64 in. diam heads.

NATIONAL GYPSUM CO — SoundBreak XP Type X Gypsum Board

3J. **Wall and Partition Facings and Accessories*** — (As an alternate to Items 3 through 3I, not shown) — Nominal 5/8 in. thick, 4 ft wide panels, applied vertically. Panels nailed 7 in. OC with 6d cement coated nails 1-7/8 in. long, 0.0915 in. shank diam and 15/64 in. diam heads. Panel joints covered with paper tape and two layers of joint compound. Nailheads covered with two layers of joint compound.

SERIOUS ENERGY INC — Type QuietRock ES (finish rating 20 min), Type QuietRock QR-527 (finish rating 24 min).

3K. **Gypsum Board*** — (As an alternate to Items 3) - Not to be used with items 6 or 7. 5/8 in. thick paper surfaced applied vertically only. Gypsum panels nailed 7 in. OC with 6d cement coated nails 1-7/8 in. long, 0.0915 in. shank diam and 15/64 in. diam heads.

CERTAINTEED GYPSUM INC — Type SilentFX

3L. **Gypsum Board*** — (As an alternate to Item 3) - 5/8 in. thick gypsum panels, with beveled, square, or tapered edges, applied either horizontally or vertically. Gypsum panels fastened to framing with 1-1/4 in. long Type W coarse thread gypsum panel steel screws spaced a maximum 8 in. OC with the last screw 1 in. from the edge of the board. When used in widths other than 48 in., gypsum panels are to be installed horizontally.

NATIONAL GYPSUM CO — Type FSK (finish rating 20 min), Type FSK-G (finish rating 20 min), Type FSW (finish rating 20 min), Type FSW-2 (finish rating 24 min), Type FSW-3 (finish rating 20 min), Type FSW-5 (finish rating 22 min), Type FSW-G (finish rating 20 min), Type FSK-C (finish rating 20 min), Type FSW-C (finish rating 20 min), Type FSMR-C, Type FSW-6 (finish rating 20 min).

3M. **Gypsum Board*** — (As an alternate to Item 3) For Direct Application to Studs Only- Nom 5/8 in. thick lead backed gypsum panels with beveled, square or tapered edges, applied vertically. Vertical joints centered over studs and staggered min 1 stud cavity on opposite sides of studs. Wallboard secured to studs with 1-5/8 in. long Type W coarse thread gypsum panel steel screws spaced 8 in. OC at perimeter and in the field. Lead batten strips required behind vertical joints of lead backed gypsum wallboard and optional at remaining stud locations. Lead batten strips, min 2 in. wide, max 10 ft long with a max thickness of 0.140 in. placed on the face of studs and attached to the stud with two 1 in. long Type S-8 pan head steel screws, one at the top of the strip and one at the bottom of the strip. Lead discs, max 5/16 in. diam by max 0.140 in. thick. compression fitted or adhered over the screw heads. Lead batten strips to have a purity of 99.9% meeting the Federal specification QQ-L-201f, Grades "A, B, C or D".

MAYCO INDUSTRIES INC — "X-Ray Shielded Gypsum"

3N. **Gypsum Board*** — (As an alternate to Items 3) For Direct Application to Studs Only- For use as the base layer or as the face layer. Nom 5/8 in. thick lead backed gypsum panels with beveled, square or tapered edges, applied vertically. Vertical joints centered over studs and staggered min 1 stud cavity on opposite sides of studs. Wallboard secured to studs with 1-5/8 in. long Type W coarse thread gypsum panel steel screws spaced 8 in. OC at perimeter and in the field when applied as the base layer. When applied as the face layer screw length to be increased to 2-1/2 in. Lead batten strips required behind vertical joints of lead backed gypsum wallboard and optional at remaining stud locations. Lead batten strips, min 2 in. wide, max 8 ft long with a max thickness of 0.14 in. placed on the face of studs and attached to the stud with construction adhesive and two 1 in. long Type S-12 pan head steel screws, one at the top of the strip and one at the bottom of the strip. Lead discs, nominal 3/8 in. diam by max 0.085 in. thick. Compression fitted or adhered over the screw heads. Lead batten strips and discs to have a purity of 99.9% meeting the Federal specification QQ-L-201f, Grade "C". Fasteners for face layer gypsum panels (Items 4, 4A or 4B) when installed over lead backed board to be min 2-1/2 in. Type S-12 bugle head steel screws spaced as described in Item 4.

RADIATION PROTECTION PRODUCTS INC — Type RPP - Lead Lined Drywall

3O. **Gypsum Board*** — (As an alternate to Item 3) — 5/8 in. thick, 4 ft. wide, applied vertically with vertical joints centered over studs and staggered one stud cavity on opposite sides of studs. Secured as described in Item 3.

CERTAINTEED GYPSUM INC — 5/8" Easi-Lite Type X (finish rating 24 min)

CERTAINTEED GYPSUM CANADA INC — 5/8" Easi-Lite Type X (finish rating 24 min)

4. **Steel Corner Fasteners — (Optional)** — For use at wall corners. Channel shaped, 2 in. long by 1 in. high on the back side with two 1/8 in. wide cleats protruding into the 5/8 in. wide channel, fabricated from 24 gauge galv steel. Fasteners applied only to the end or cut edge (not along tapered edges) of the gypsum board, no greater than 2 in. from corner of gypsum board, max spacing 16 in. OC. Nailed to adjacent stud through tab using one No. 6d cement coated nail per fastener. Corners of wall board shall be nailed to top and bottom plate using No. 6d cement coated nails.

5. **Batts and Blankets*** — (Optional - Required when Item 6A is used) Glass fiber or mineral wool insulation. Placed to completely or partially fill the stud cavities. When Item 6A is used, glass fiber or mineral wool insulation shall be placed to completely fill the stud cavities and shall be secured to the studs 24 in. OC with staples, nails or screws.

CERTAINTEED CORP

GUARDIAN FIBERGLASS INC

JOHNS MANVILLE INTERNATIONAL INC

KNAUF INSULATION GMBH

MANSON INSULATION INC

OWENS CORNING HT INC, DIV OF OWENS CORNING — Corning Fiberglas Corp.

ROCK WOOL MANUFACTURING CO — Delta Board.

ROCKWOOL MALAYSIA SDN BHD — Acoustical Fire Batts

ROXUL INC — Acoustical Fire Batts

THERMAFIBER INC — Type SAFB.

5A. **Fiber, Sprayed*** — (Not shown - Not for use with Item 6A) As an alternate to Batts and Blankets (Item 5) — Spray applied cellulose material. The fiber is applied with water to completely fill the enclosed cavity in accordance with the application instructions supplied with the product with a nominal dry density of 2.7 lb/ft³. Alternate Application Method: The fiber is applied without water or adhesive at a nominal dry density of 3.5 lb/ft³, in accordance with the application instructions supplied with the product. When Item 6B is used, Fiber, Sprayed shall be INS735, INS745, INS765LD or INS770LD.

U S GREENFIBER L L C — INS735 & INS745 for use with wet or dry application. INS510LD, INS515LD, INS541LD, INS735, INS745, INS765LD, and INS770LD are to be used for dry application only.

5B. **Fiber, Sprayed*** — (Not shown - Not for use with Item 6A) As an alternate to Batts and Blankets (Item 5) and Item 5A - Spray applied cellulose insulation material. The fiber is applied with water to interior surfaces in accordance with the application instructions supplied with the product. Applied to completely fill the enclosed cavity. Minimum dry density of 4.3 pounds per cubic ft.

NU-WOOL CO INC — Cellulose Insulation

5C. **Batts and Blankets*** — Required for use with resilient channels, Item 7, 3 in. thick mineral wool batts, placed to fill interior of wall, attached to the 4 in. face of the studs with staples placed 24 in. OC.

THERMAFIBER INC — Type SAFB

5D. **Glass Fiber Insulation** — (As an alternate to Item 5C) — 3 in. thick glass fiber batts bearing the UL Classification Marking as to Surface Burning and/or Fire Resistance, placed to fill the interior of the wall, attached to the 4 in. face of the studs with staples placed 24 in. OC. See **Batts and Blankets** (BKNV or BZJZ) Categories for names of Classified companies.

5E. **Batts and Blankets*** — (Required for use with Wall and Partition Facings and Accessories, Item 3D) — Glass fiber insulation, nom 3-1/2 in. thick, min. density of 0.80 pcf, with a flame spread of 25 or less and a smoke developed of 50 or less, friction-fitted to completely fill the stud cavities. See Batts and Blankets Category (BKNV) for names of manufacturers.

5F. **Fiber, Sprayed*** — (Optional, Not Shown - Not for use with Item 6, 6A or 6B). As an alternate to Batts and Blankets (Item 5) and Item 5A - Spray applied granulated mineral fiber material. The fiber is applied with water to completely fill the enclosed cavity in accordance with the application instructions supplied with the product. See **Fiber, Sprayed** (CCAZ).

AMERROCK PRODUCTS L P — Rockwool

5G. **Fiber, Sprayed*** — (Optional, Not Shown - Not for use with Items6, 6A or 6B). As an alternate to Batts and Blankets (Item 5) and Item 5A - Brown Colored Spray applied cellulose fiber. The fiber is applied with water to completely fill the enclosed stud cavity in accordance with the application instructions supplied with the product. The minimum dry density shall be 4.30 lbs/ft³.

INTERNATIONAL CELLULOSE CORP — Celbar-RL

6. **Steel Framing Members (Optional, Not Shown)*** — Furring channels and Steel Framing Members as described below:

a. **Furring Channels** — Formed of No. 25 MSG galv steel. 2-9/16 in. or 2-23/32 in. wide by 7/8 in. deep, spaced 24 in. OC perpendicular to studs. Channels secured to studs as described in Item b. Ends of adjoining channels are overlapped 6 in. and tied together with double strand of No. 18 SWG galv steel wire near each end of overlap. As an alternate, ends of adjoining channels may be overlapped 6 in. and secured together with two self-tapping #6 framing screws, min. 7/16 in. long at the midpoint of the overlap, with one screw on each flange of the channel. Gypsum board attached to furring channels as described in Item 3. b. Steel Framing Members* — Used to attach furring channels (Item 6a) to studs. Clips spaced 48 in. OC. RSIC-1 and RSIC-1 (2.75) clips secured to studs with No. 8 x 2-1/2 in. coarse drywall screw through the center grommet. RSIC-V and RSIC-V (2.75) clips secured to studs with No. 8 x 1-1/2 in. coarse drywall screw through the center hole. Furring channels are friction fitted into clips. RSIC-1 and RSIC-V clips for use with 2-9/16 in. wide furring channels. RSIC-1 (2.75) and RSIC-V (2.75) clips for use with 2-23/32 in. wide furring channels.

b. **Steel Framing Members*** — Used to attach furring channels (Item 6a) to studs. Clips spaced 48 in. OC. RSIC-1 clips secured to studs with No. 8 x 2-1/2 in. coarse drywall screw through the center grommet. RSIC-V clips secured to studs with No. 8 x 1-1/2 in. coarse drywall screw through the center hole. Furring channels are friction fitted into clips.

PAC INTERNATIONAL INC — Types RSIC-1, RSIC-V, RSIC-1 (2.75), RSIC-V (2.75).

6A. **Steel Framing Members (Optional, Not Shown)*** — Furring channels and Steel Framing Members on one side of studs as described below:

a. **Furring Channels** — Formed of No. 25 MSG galv steel, spaced 24 in. OC perpendicular to studs. Channels secured to studs as described in Item b. Ends of adjoining channels are overlapped 6 in. and tied together with double strand of No. 18 SWG galv steel wire near each end of overlap. Batts and Blankets placed in stud cavity as described in Item 5. Two layers of gypsum board attached to furring channels as described in Item 3.

b. **Steel Framing Members*** — used to attach furring channels (Item 6Aa) to one side of studs only. Clips spaced 48 in. OC., and secured to studs with two No. 8 x 2-1/2 in. coarse drywall screws, one through the hole at each end of the clip. Furring channels are friction fitted into clips.

KINETICS NOISE CONTROL INC — Type Isomax.

6B. **Steel Framing Members** — (Optional, Not Shown)* — Furring channels and Steel Framing Members as described below:

a. **Furring Channels** — Formed of No. 25 MSG galv steel, 2-3/8 in. wide by 7/8 in. deep, spaced 24 in. OC perpendicular to studs. Channels secured to studs as described in Item b. Ends of adjoining channels are overlapped 6 in. and tied together with double strand of No. 18 SWG galv steel wire near each end of overlap. As an alternate, ends of adjoining channels may be overlapped 6 in. and secured together with two self-tapping #6 framing screws, min. 7/16 in. long at the midpoint of the overlap, with one screw on each flange of the channel. Gypsum board attached to furring channels as described in Item 3.

b. **Steel Framing Members*** — Used to attach furring channels (Item 6Ba) to studs. Clips spaced 48 in. OC. Genie clips secured to studs with No. 8 x 1-1/2 in. coarse drywall screw through the center hole. Furring channels are friction fitted into clips.

PLITEQ INC — Type Genie Clip

6C. **Steel Framing Members** — (Optional, Not Shown)* — Furring channels and resilient sound isolation clip as described below:

a. **Furring Channels** — Formed of No. 25 MSG galv steel. Spaced 24 in. OC perpendicular to studs. Channels secured to studs as described in Item b. Ends of adjoining channels overlapped 6 in. and secured together with four self-tapping No. 8x1/2 Self Drilling screws (2 per side 1 in. and 4 in. from overlap edge). Gypsum board attached to furring channels as described in Item 3. Side joint furring channels shall be attached to studs with RESILMOUNT Sound Isolation Clips located approximately 2 in. from each end of length of channel. Both Gypsum Boards at side joints fastened into channel with screws spaced 8 in. OC, approximately 1/2 in. from joint edge.

b. **Steel Framing Members*** — Resilient sound isolation clip used to attach furring channels (Item 6Ca) to studs. Clips spaced 16 in. OC., and secured to studs with No. 10 x 2-1/2 in. coarse drywall screw through the center hole. Furring channels are friction fitted into clips.

STUDCO BUILDING SYSTEMS — RESILMOUNT Sound Isolation Clips - Type A237 or A237R

7. **Furring Channel** — Optional - Not Shown - For use on one side of the wall - Resilient channels, 25 MSG galv steel, spaced vertically 24 in. OC, flange portion screw attached to one side of studs with 1-1/4 in. long diamond shaped point, double lead Phillips head steel screws. When resilient channels are used, insulation, Items 5C or 5D is required.

7A. **Steel Framing Members*** — Optional - Not Shown - Used as an alternate method to attach resilient channels (Item 7) to one side of studs only. Clips attached at each intersection of the resilient channel and the wood studs (Item 1). Resilient channels are friction fitted into clips, and then clips are secured to the wood stud with min. 1-3/4 in. long diamond shaped point, double lead Phillips head steel screws through the center hole of the clip and the resilient channel flange.

8. **Caulking and Sealants** — (not shown, optional) A bead of acoustical sealant applied around the partition perimeter for sound control.

9. **STC Rating** — The STC Rating of the wall assembly is 56 when it is constructed as described by Items 1 through 6, except:

A. Item 2, above - Nailheads Shall be covered with joint compound.

B. Item 2, above - Joints As described, shall be covered with fiber tape and joint compound.

C. Item 5, above - Batts and Blankets* The cavities formed by the studs shall be friction fit with R-19 unfaced fiberglass insulation batts measuring 6-1/4 in. thick and 15-1/4 in. wide.

D. Item 6, above - Steel Framing Members* Type RSIC-1 clips shall be used to attach gypsum board to studs on either side of the wall assembly.

E. Item 8, above - Caulking and Sealants (not shown) A bead of acoustical sealant shall be applied around the partition perimeter for sound control.

F. Steel Corner Fasteners (Item 4), Fiber, Sprayed (Items 5A and 5B) and Steel Framing Members (Item 6A), not evaluated as alternatives for obtaining STC rating.

10. **Wall and Partition Facings and Accessories*** — (Optional, Not shown) — Nominal 1/2 in. thick, 4 ft wide panels, for optional use as an additional layer on one or both sides of the assembly. Panels attached in accordance with manufacturer's recommendations. When the QR-510 panel is installed between the wood framing and the UL Classified gypsum board, the required UL Classified gypsum board layer(s) is/are to be installed as indicated as to fastener type and spacing, except that the required fastener length shall be increased by a minimum of 1/2 in. Not evaluated or intended as a substitute for the required layer(s) of UL Classified Gypsum Board.

SERIOUS ENERGY INC — Type QuietRock QR-510.

11. **Cementitious Backer Units*** — (Optional Item Not Shown - For Use On Face Of 1 Hr Systems With All Standard Items Required) - 7/16 in., 1/2 in., 5/8 in., 3/4 in. or 1 in. thick, min. 32 in. wide.- Applied vertically or horizontally with vertical joints centered over studs. Fastened to studs and runners with cement board screws of adequate length to penetrate stud by a minimum of 3/8 in. for steel framing members, and a minimum of 3/4 in. for wood framing members spaced a max of 8 in. OC. When 4 ft. wide boards are used, horizontal joints need not be backed by framing.

NATIONAL GYPSUM CO — Type DuraBacker, PermaBase, DuraBacker Plus, or PermaBase Plus

12. **Non-Bearing Wall Partition Intersection** — (Optional) —Two nominal 2 by 4 in. studs or nominal 2 by 6 in. studs nailed together with two 3 in. long 10d nails spaced a max. 16 in. OC. vertically and fastened to one side of the minimum 2 by 4 in. stud with 3 in. long 10d nails spaced a max. 16 in. OC. vertically. Intersection between partition wood studs to be flush with the 2 by 4 in. studs. The wall partition wood studs are to be framed by with a second 2 by 4 in. wood stud fastened with 3 in. long 10d nails spaced a max. 16 in. OC. vertically. Maximum one non-bearing wall partition intersection per stud cavity. Non-bearing wall partition stud depth shall be at a minimum equal to the depth of the bearing wall.

13. **Mesh Netting** — (Not shown) - Any thin, woven or non-woven fibrous netting material attached with staples to the outer face of one row of studs to facilitate the installation of the sprayed fiber from the opposite row.

14. **Mineral and Fiber Board*** — (Optional, Not shown) — For optional use as an additional layer on one side of wall. Nom 1/2 in. thick, 4 ft wide with long dimension parallel and centered over studs. Attached to framing with 2 in. long Type W steel screws, spaced 12 in. OC. The required UL Classified gypsum board layer(s) is/are to be installed as indicated as to fastener type and spacing, except that the required fastener length shall be increased by a minimum of 1/2 in. Not evaluated or intended as a substitute for the required layer(s) of UL Classified Gypsum Board.

HOMASOTE CO — Homasote Type 440-32

14A. **Mineral and Fiber Board*** — (Optional, Not shown) — For use with Items 14B-14E) — For optional use as an additional layer on one side of wall. Nom 1/2 in. thick, 4 ft wide with long dimension parallel and centered over studs. Attached to framing with minimum 1-3/8 in. long ring shanked nails or 1-1/4 in. long Type W steel screws, spaced 12 in. OC along board edges and 24 in. OC in field of board along intermediate framing. Not evaluated or intended as a substitute for the required layer(s) of UL Classified Gypsum Board.

HOMASOTE CO — Homasote Type 440-32

14B. **Glass Fiber Insulation** — (For use with Item 14A) — 3-1/2 in. thick glass fiber batts bearing the UL Classification Marking as to Surface Burning and/or Fire Resistance, placed to fill the interior of the wall. See Batts and Blankets (BKNV or BZJZ) categories for names of Classified companies.

14C. **Batts and Blankets*** — (As an alternate to Item 14B. For use with Item 14A), 3 in. thick mineral wool batts, placed to fill interior of wall, attached to the 3-1/2 in. face of the studs with staples placed 24 in. OC.

THERMAFIBER INC — Type SAFB

14D. **Adhesive** — (For use with Item 14A) - Construction grade adhesive applied in vertical, serpentine, nominal 3/8 in. wide beads down the length of both vertical edges of Mineral and Fiber Board (Item 14A).

14E. **Gypsum Board*** — (For use with Item 14A) - 5/8 in. thick, 4 ft wide, applied vertically over Mineral and Fiber Board (Item 14A) with vertical joints located anywhere over stud cavities. Secured to mineral and fiber boards with 1-1/2 in. Type G Screws spaced 8 in. OC along edges of each vertical joint and 12 in. OC in intermediate field of the Mineral and Fiber Board (Item 14A). Secured to outermost studs and bearing plates with 2 in. long Type S screws spaced 8 in. OC. Gypsum Board joints covered with paper tape and joint compound. Screw heads covered with joint compound. Finish Rating 30 Min.

AMERICAN GYPSUM CO — Type AG-C

CERTAINTEED GYPSUM INC — Type FRPC, Type C

CERTAINTEED GYPSUM CANADA INC — Type C

CGC INC — Types C, IP-X2, IPC-AR

GEORGIA-PACIFIC GYPSUM L L C — Types 5, DAPC, TG-C

LAFARGE NORTH AMERICA INC — Types LGFC-C, LGFC-C/A

NATIONAL GYPSUM CO — Types FSK-C, FSW-C

PABCO BUILDING PRODUCTS L L C, DBA PABCO GYPSUM — Type PG-C.

PANEL REY S A — Type PRC

THAI GYPSUM PRODUCTS PCL — Type C

UNITED STATES GYPSUM CO — Types C, IP-X2, IPC-AR

USG MEXICO S A DE C V — Types C, IP-X2, IPC-AR

*Bearing the UL Classification Mark

Last Updated on 2013-10-24

Questions? Print this page Terms of Use Page Top

© 2013 UL LLC

When the UL Leaf Mark is on the product, or when the word "Environment" is included in the UL Mark, please search the UL Environment database for additional information regarding this product's certification.

The appearance of a company's name or product in this database does not in itself assure that products so identified have been manufactured under UL's Follow-Up Service. Only those products bearing the UL Mark should be considered to be Certified and covered under UL's Follow-Up Service. Always look for the Mark on the product.

UL permits the reproduction of the material contained in the Online Certification Directory subject to the following conditions: 1. The Guide Information, Assemblies, Constructions, Designs, Systems, and/or Certifications (files) must be presented in their entirety and in a non-misleading manner, without any manipulation of the data (or drawings). 2. The statement "Reprinted from the Online Certifications Directory with permission from UL" must appear adjacent to the extracted material. In addition, the reprinted material must include a copyright notice in the following format: "© 2013 UL LLC".

2 FIRE-RATED WALL DESIGN NO. U305
SCALE: N.T.S.

FRANCO ARCHITECTS INC.
12345 Ventura Blvd. H
Studio City, CA 91604
Architecture and Planning
Tel 818 754-2030
Fax 818 754-2032

MAGNOLIA SCIENCE ACADEMY
18220 SHERMAN WAY, RESEDA, CA91335

REV	DESCRIPTION	DATE
	PLAN CHECK #1	6/14/2017

LICENSED ARCHITECT
JOHANN D. WANG
C27010
4/30/2019 RENEWAL DATE
STATE OF CALIFORNIA

PROJECT: MAGNOLIA SCIENCE ACADEMY
PROJECT ADDRESS: 18220 SHERMAN WAY, RESEDA, CA91335
DRAWING TITLE: DETAILS
DRAWN BY:
ISSUE DATE: 6/14/2017
JOB NUMBER:
DRAWING SCALE: AS NOTED
APPROVED BY:
DRAWING NUMBER: D6.0

CLASSIFIED
Underwriters Laboratories, Inc.
to UL 1479

WL 2098

System No. W-L-2098

F Ratings — 1 and 2 Hr (See Item 1)
T Ratings — 1 and 2 Hr (See Item 1)
L Rating At Ambient — Less Than 1 CFM/Sq Ft
L Rating At 400 F — 4 CFM/Sq Ft

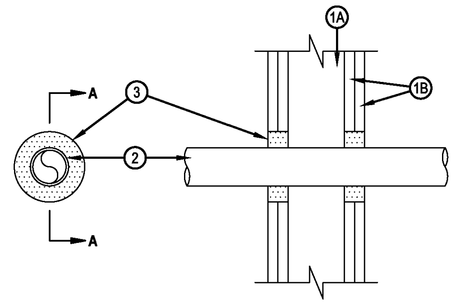

SECTION A-A

1. Wall Assembly — The fire-rated gypsum wallboard/stud wall assembly shall be constructed of the materials and in the manner specified in the individual U300 or U400 Series Wall and Partition Designs in the UL Fire Resistance Directory and shall include the following construction features:
   A. Studs — Wall framing may consist of either wood studs or steel channel studs. Wood studs to consist of nom 2 by 4 in. lumber spaced 16 in. OC. Steel studs to be min 2-1/2 in. wide and spaced max 24 in. OC.
   B. Gypsum Board* — 5/8 in. thick, 4 ft wide with square or tapered edges. The gypsum wallboard type, thickness, number of layers, fastener type and sheet orientation shall be as specified in the individual Wall and Partition Design. Max diam of opening is 4-3/8 in.
   The hourly F and T Ratings of the firestop system are equal to the hourly fire rating of the wall assembly in which it is installed.
2. Through Penetrants — One nonmetallic pipe installed within the firestop system. Pipe to be rigidly supported on both sides of floor or wall assembly. The space between pipe and periphery of opening shall be min 3/4 in. to max 1-1/4 in. Pipe to be rigidly supported on both sides of the floor or wall assembly. The following types and sizes of nonmetallic pipes may be used:
   A. Polyvinyl Chloride (PVC) Pipe — Nom 2 in. diam (or smaller) Schedule 40 PVC pipe for use in closed (process or supply) piping system.
   B. Chlorinated Polyvinyl Chloride (CPVC) Pipe — Nom 2 in. diam (or smaller) SDR17 CPVC pipe for use in closed (process or supply) piping systems.
3. Fill, Void or Cavity Materials* — Sealant — Installed to completely fill the annular space between the pipes and gypsum wallboard on both sides of wall.
   HILTI CONSTRUCTION CHEMICALS, DIV OF HILTI INC — FS-One Sealant

*Bearing the UL Classification Mark

HILTI
Hilti Firestop Systems

Reproduced by HILTI, Inc. Courtesy of Underwriters Laboratories, Inc.
January 09, 2003

1 FIRE STOP DESIGN NO. W-L-2098
SCALE: N.T.S.

CLASSIFIED
c UL us
Classified by
Underwriters Laboratories, Inc.
to UL 1479 and CAN/ULC-S115

FC 1009

System No. F-C-1009

F Rating - 1 and 2 Hr (See Item 1)
T Rating - 1 Hr and 2 Hr (See Item 1)
L Rating At Ambient - Less Than 1 CFM/
L Rating At 400 F - 4 CFM/sq ft

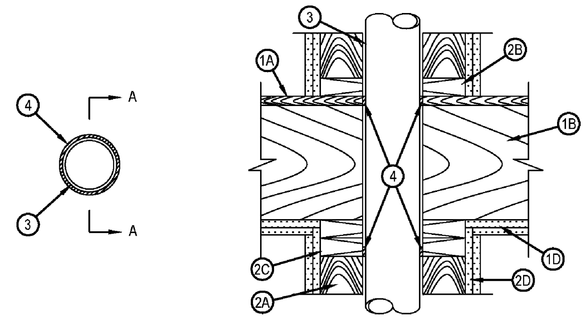

SECTION A-A

1. Floor-Ceiling Assembly — The 1 or 2 hr fire-rated solid or trussed lumber joist floor-ceiling assembly shall be constructed of the materials and in the manner specified in the individual L500 Series Floor-Ceiling Designs in the UL Fire Resistance Directory. The F Rating of the firestop system is equal to the rating of the floor-ceiling assembly. The general construction features of the floor-ceiling assembly are summarized below:
   A. Flooring System — Lumber or plywood subfloor with finish floor of lumber, plywood or Floor Topping Mixture* as specified in the individual Floor-Ceiling Design. Diam of opening to be max 1 in. larger than diam of pipe. As an alternate, the opening may be square-cut with a max dimension 1 in. greater than the diam of the pipe.
   B. Wood Joists* — Nom 10 in. deep (or deeper) lumber, steel or combination lumber and steel joists, trusses or Structural Wood Members* with bridging as required and with ends firestopped.
   C. Furring Channels — (Not Shown) —(As required.) Resilient galvanized steel furring installed in accordance with the manner specified in the individual L500 Series Designs in the Fire Resistance Directory.
   D. Gypsum Board* — Thickness, type, number of layers and fasteners shall be as specified in the individual Floor-Ceiling Design. Diam of opening to be max 1 in. larger than diam of pipe.

HILTI
Hilti Firestop Systems

Reproduced by HILTI, Inc. Courtesy of Underwriters Laboratories, Inc.
September 18, 2007

Page: 1 of 2

CLASSIFIED
c UL us
Classified by
Underwriters Laboratories, Inc.
to UL 1479 and CAN/ULC-S115

FC 1009

System No. F-C-1009

F Rating - 1 and 2 Hr (See Item 1)
T Rating - 1 Hr and 2 Hr (See Item 1)
L Rating At Ambient - Less Than 1 CFM/sq ft
L Rating At 400 F - 4 CFM/sq ft

2. Chase Wall — (Optional) - The through penetrant (Item 3) may be routed through a 1 or 2 hr fire-rated single, double or staggered wood stud/gypsum board chase wall having a fire rating consistent with that of the floor-ceiling assembly. Depth of chase wall to be min 1 in. greater than the diameter of the through penetrant. The chase wall shall be constructed of the materials and in the manner specified in the individual U300 Series Wall and Partition Designs in the UL Fire Resistance Directory and shall include the following construction features:
   A. Studs — Nom 2 by 4 in., 2 by 6 in. or double nom 2 by 4 in. lumber studs. Nom 2 by 4 in. studs are allowed for through-penetrants (Item 3) not exceeding nom 2 in. diam.
   B. Sole Plate — Nom 2 by 4 in., 2 by 6 in. or parallel 2 by 4 in. lumber plates, tightly butted. Diam of opening is to be max 1 in. larger than diam of pipe. As an alternate, the opening may be square-cut with a max dimension 1 in. greater than the diam of the pipe. Plates may be discontinuous over opening, terminating at two opposing edges of opening. Max length of discontinuity to be 1 in. greater than diam of through penetrant.
   C. Top Plate — The double top plate shall consist of two nom 2 by 4 in., 2 by 6 in. or two sets of parallel 2 by 4 in. lumber plates, tightly butted. Diam of opening is to be max 1 in. larger than diam of pipe. As an alternate, the opening may be square-cut with a max dimension 1 in. greater than the diam of the pipe. Plates may be discontinuous over opening, terminating at two opposing edges of opening. Max length of discontinuity to be 1 in. greater than diam of through penetrant.
   D. Steel Plate — When lumber plates are discontinuous, nom 1-1/2 in. wide No. 20 gauge (or heavier) galv steel plates shall be installed to connect each discontinuous lumber plate and to provide a form for the fill material. Steel plates sized to lap 2 in. onto each discontinuous lumber plate and secured to lumber plates with steel screws or nails.
   E. Gypsum Board* — Thickness, type, number of layers and fasteners shall be as specified in individual Wall and Partition Design.
3. Through Penetrants — One metallic pipe, conduit or tubing to be installed within the firestop system. Pipe, conduit or tubing to be rigidly supported on both sides of floor assembly. The annular space within the firestop system shall be min 0 in. (point contact) to max 1 in.. The following types and sizes of metallic pipes or conduits may be used:
   A. Steel Pipe — Nom 4 in. diam (or smaller) Schedule 10 (or heavier) steel pipe.
   B. Iron Pipe — Nom 4 in. diam (or smaller) cast or ductile iron pipe.
   C. Conduit — Nom 4 in. diam (or smaller) steel electrical metallic tubing or steel conduit.
   D. Copper Tubing — Nom 4 in. diam (or smaller) Type L (or heavier) copper tubing.
   E. Copper Pipe — Nom 4 in. diam (or smaller) Regular (or heavier) copper pipe.
4. Fill, Void or Cavity Material* — Sealant — Min 3/4 in. thickness of fill material applied within the annulus, flush with the top surface of the floor or the sole plate. Min 5/8 in. thickness of fill material applied within the annulus, flush with bottom surface of ceiling or lower top plate.
   HILTI CONSTRUCTION CHEMICALS, DIV OF
   HILTI INC — CP601S, CP606 or FS-One Sealant. (Note: L Ratings apply only when FS-ONE Sealant is used.)

*Bearing the UL Classification Mark

HILTI
Hilti Firestop Systems

Reproduced by HILTI, Inc. Courtesy of Underwriters Laboratories, Inc.
September 18, 2007

Page: 2 of 2

2 FIRE STOP DESIGN NO. F-C-1009
SCALE: N.T.S.

FRANCO ARCHITECTS INC.
12345 Ventura Blvd. H
Studio City, CA 91604
Tel 818 754-2030
Fax 818 754-2032
Architecture and Planning

MAGNOLIA SCIENCE ACADEMY
18220 SHERMAN WAY, RESEDA, CA91335

REV	DESCRIPTION	DATE
	PLAN CHECK #1	6/14/2017

LICENSED ARCHITECT
JOHANN D. WANG
C27010
4/30/2019
RENEWAL DATE
STATE OF CALIFORNIA

PROJECT
MAGNOLIA SCIENCE ACADEMY

PROJECT ADDRESS
18220 SHERMAN WAY,
RESEDA, CA91335

DRAWING TITLE
DETAILS

DRAWN BY
ISSUE DATE 6/14/2017
JOB NUMBER
DRAWING SCALE AS NOTED
APPROVED BY:

DRAWING NUMBER
D6.1

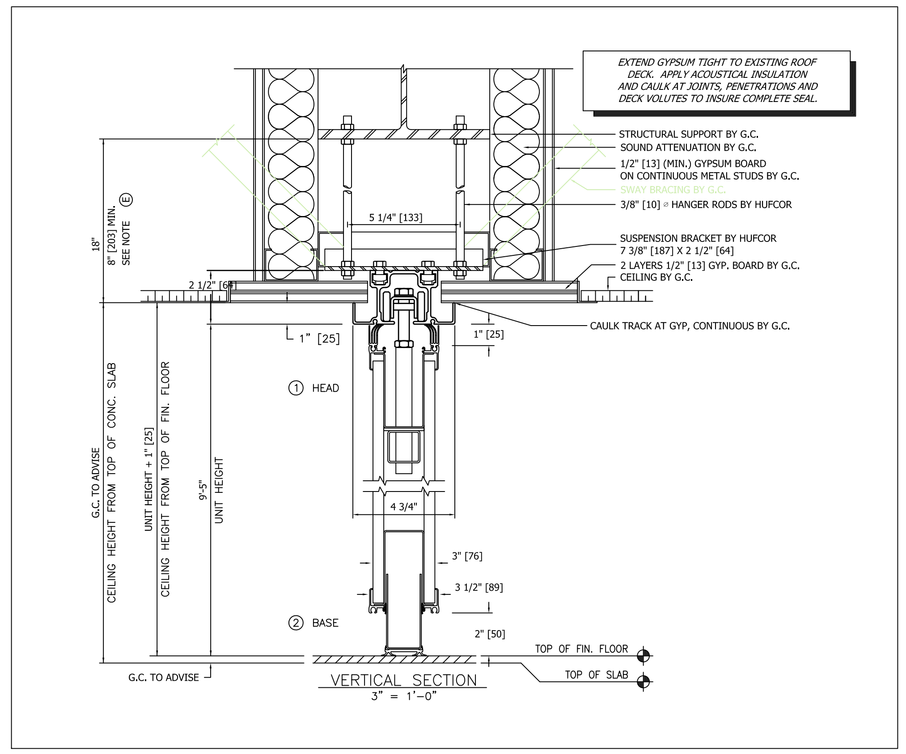

1 FOLDING WALL SECTION
SCALE: 3"=1'-0"

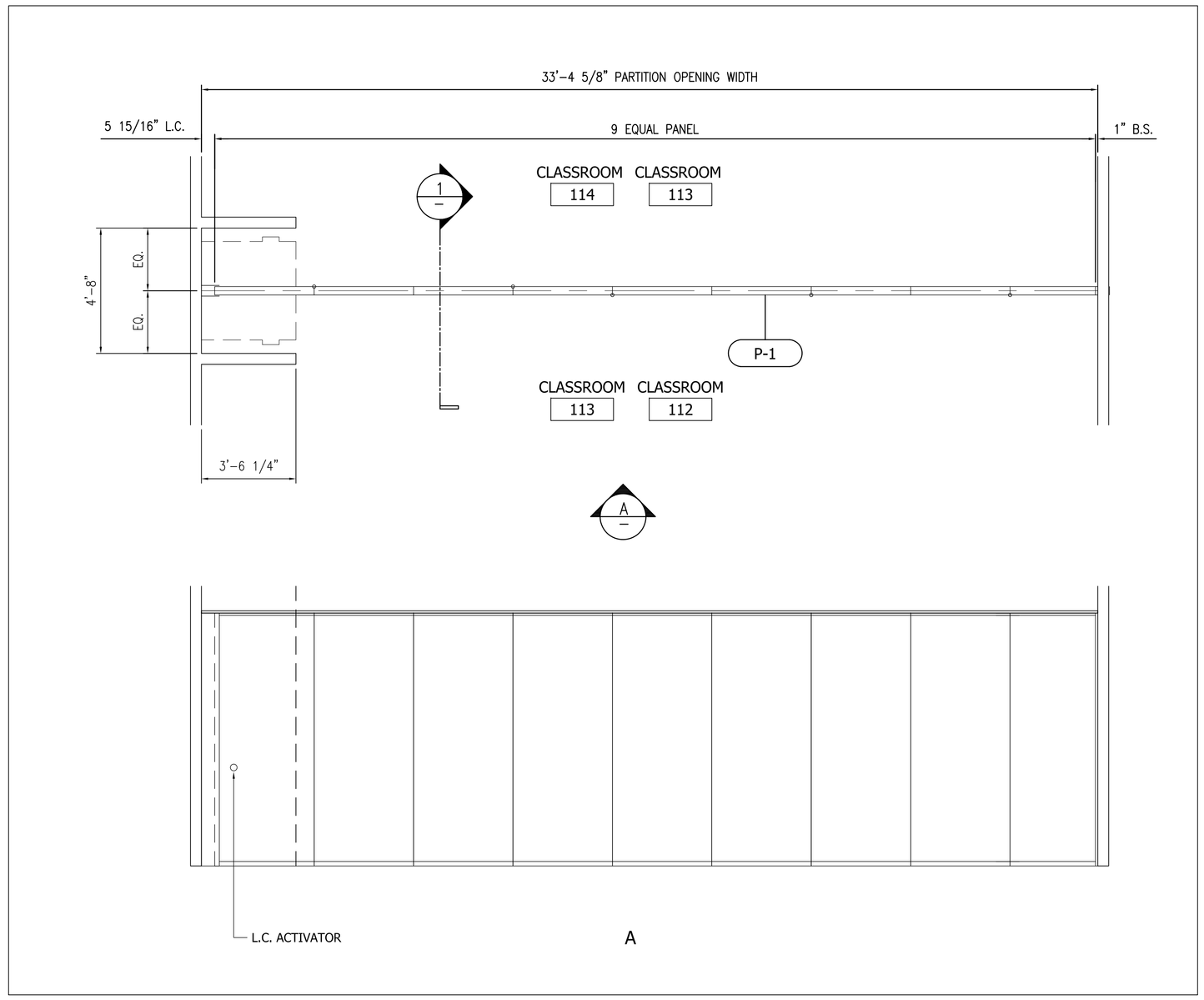

2 FOLDING WALL PLAN AND ELEVATION
SCALE: 3/8"=1'-0"

FRANCO ARCHITECTS INC.
12345 Ventura Blvd. H
Studio City, CA 91604
Tel 818 754-2030
Fax 818 754-2032
Architecture and Planning

MAGNOLIA SCIENCE ACADEMY
18220 SHERMAN WAY, RESEDA, CA91335

REV	DESCRIPTION	DATE
	PLAN CHECK #1	6/14/2017

LICENSED ARCHITECT
JOHANN D. WANG
C27010
4/30/2019
RENEWAL DATE
STATE OF CALIFORNIA

PROJECT
MAGNOLIA SCIENCE ACADEMY

PROJECT ADDRESS
18220 SHERMAN WAY, RESEDA, CA91335

DRAWING TITLE
FOLDING WALL DETAILS

DRAWN BY
ISSUE DATE 6/14/2017
JOB NUMBER
DRAWING SCALE AS NOTED
APPROVED BY:

DRAWING NUMBER
D7.0

1 SPECIAL WALL CONDITIONS AND OPTIONS

NOTES:
1. POST TENSION ROD – EMBED 6" MIN INTO FOOTING. THICKEN FOOTING AS REQUIRED FOR COVER PER DETAIL 6.
2. END OF WALL.
3. RODS AT 12" EITHER SIDE OF A CONTROL JOINT OR END OF WALL.
4. POST-TENSIONED ROD SPACING PER SCHEDULE BUT NOT TO EXCEED 4'-8" ON EITHER SIDE OF THE CONTROL JOINT OR END OF WALL.
5. END OR CORNER OF WALL MAY START WITH #4 VERTICAL REBAR, GROUT SOLID THEN SPACE FIRST POST-TENSION ROD PER SCHEDULE. REBAR MAY SUBSTITUTE FOR POST-TENSION ROD AT CORNER OR END OF WALL.
6. 8'-0" TALL MAX x 16" MASONRY PIER WITH 4 #4 VERTICAL AND 1 #2 TIE AT 16" O.C. – NO VENEER ALLOWED.
7. 8'-0" TALL MAX x 24" SQUARE MASONRY PIER WITH 4 #4 VERTICAL AND 1 #2 TIE AT 16" O.C. – NO VENEER ALLOWED.
8. LINE OF FOOTING BELOW. FOOTING AT PROTO II WALL PER PLANS AND SCHEDULES. SPREAD FOOTING AT PIER SHALL BE 12" THICK AND 15" WIDER ALL AROUND PIER.
9. RUN HORIZONTAL JOINT REINFORCING THROUGH PIER, STOP AT FACE OF PIER AT CONTRACTORS OPTION OR AT CONTROL JOINT.
10. ALL VERTICAL MASONRY PIER REINFORCING SHALL HAVE 6" HOOKS AT BOTTOM AND EXTEND A MINIMUM OF 8" INTO FOOTING.
11. TYPICAL POST-TENSION ROD SPACING PER SCHEDULE.
12. PROTO II WALL.
13. AT SLOPE USE 12" THICK X 32" SQUARE SETTING PAD WITH 13" DIA. X 5'-8" MIN PIER BELOW. ADJUST PIER DEPTH PER DETAIL 9, NOTE 7.

NOTE:
• AT CONTRACTORS OPTION, THE WALL EXPANSION JOINT MAY OCCUR AT THE FACE OF THE PIERS AS SPECIFIED IN GENERAL NOTE 14.

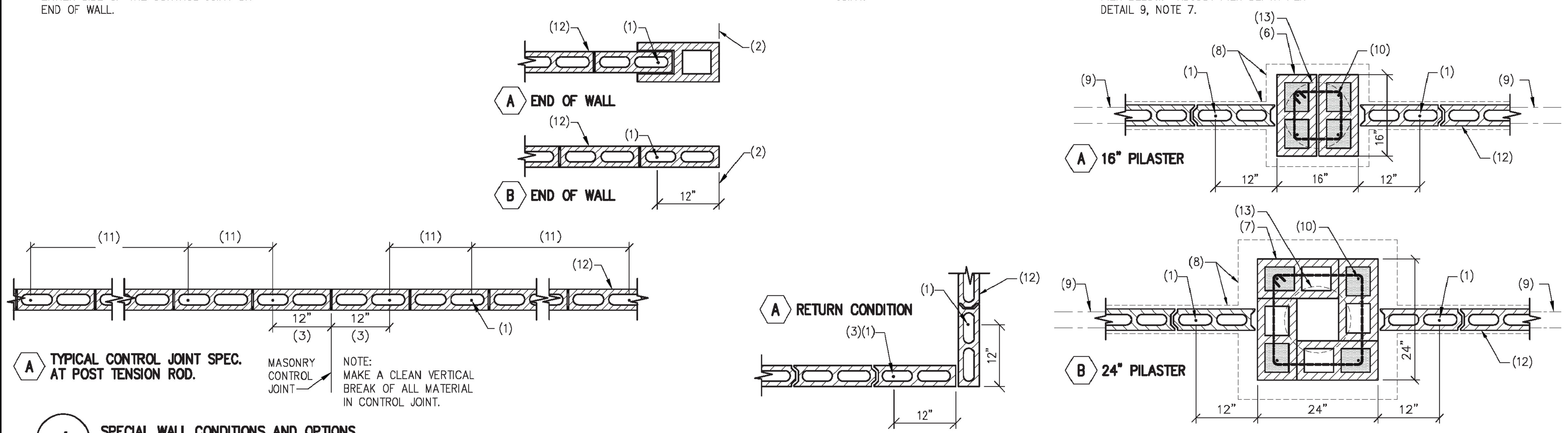

NO SCALE

9 5'-0" TO DAYLIGHT DETAIL FOR FOOTINGS

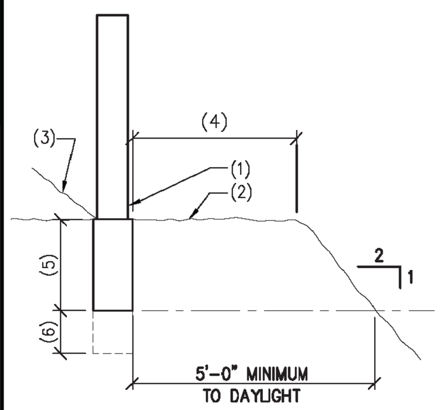

NOTES:
1. FENCE WALL – DETAIL NOT SHOWN FOR CLARITY.
2. FINISHED GRADE.
3. NO SLOPING ADJACENT GRADE ALLOWED.
4. FACE OF FOOTING TO TOP OF SLOPE.
5. SEE SCHEDULE FOR WALLS UP TO 6'-0" HIGH.
6. SEE SCHEDULE FOR WALLS ABOVE 6'-0" HIGH.

NOTE:
THIS DETAIL DESCRIBES THE MINIMUM DISTANCE REQUIREMENTS FOR THE LOWEST FOOTING EDGE TO FINISHED GRADE.

(5) SCHEDULE FOR WALLS UP TO 6'-0"

FACE OF FOOTING TO TOP OF SLOPE.	MIN. DEPTH OF TRENCH FOOTING
12" OR MORE	2'-6"
6" TO 11"	2'-11"
3" TO 5"	3'-1"

(6) SCHEDULE FOR WALLS ABOVE 6'-0" UP TO 9'-4"

FACE OF FOOTING TO TOP OF SLOPE.	ADDED DEPTH OF TRENCH FOOTING
36" OR MORE	3"
30"	6"
24"	9"
12"	15"
6"	18"
3"	20"

NO SCALE

7 TYPICAL STEP IN CONCRETE FOOTING

NOTES:
1. LAP PER G.S.N. (24" MIN) – TYP.
2. TOP OF WALL FOOTING.
3. RETURN TO FOOTING THICKNESS AS SHOWN ON PLAN.

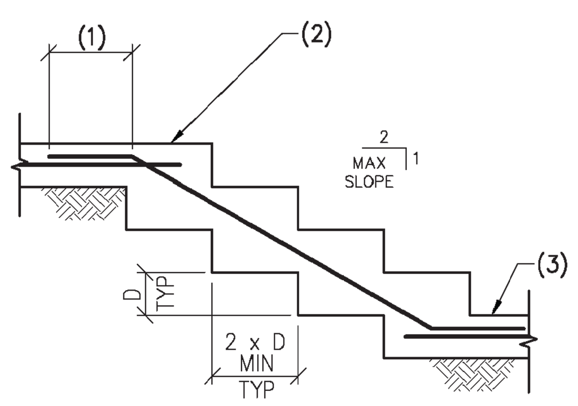

NOTE:
D = 2'-0" MAXIMUM.
FOR ADDITIONAL INFORMATION, SEE PLANS AND DETAILS.

NO SCALE

4 DETAIL NOT USED

NO SCALE

10 PROTO II WALL – 7'-4" TO 9'-4" HIGH

(INCLUDES MINOR RETAINING AND FREESTANDING CONDITIONS) NO SCALE

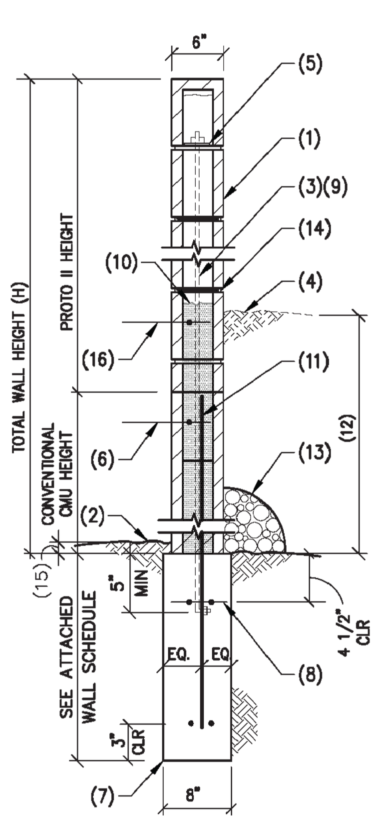

NOTES:
1. 6" PROTO II WALL.
2. FINISHED GRADE.
3. PROTO II ROD FULL HEIGHT AND EMBEDDED INTO FOOTING AS SHOWN. PT RODS TO OCCUR WITHIN ± 8" OF CONVENTIONAL REINFORCING. ONLY SOLID GROUT CELLS WITH PT RODS OR CONVENTIONAL REINFORCING WITHIN CONVENTIONAL CMU HEIGHT.
4. HIGH SOIL AT RETAINAGE WHERE OCCURS (MAX 4:1 SLOPE).
5. SEE DETAIL 5 NOTE 3 FOR BEARING PLATE SIZE.
6. 1 #4 CONTINUOUS IN 8" DEEP SOLID GROUTED BOND BEAM.
7. CONTINUOUS TRENCH FOOTING – SEE SCHEDULE.
8. 2 #4 CONT. TOP AND BOTTOM.
9. SEE PROTO II WALL SCHEDULE FOR ROD SPACING.
10. GROUT CELLS SOLID UP TO 3" ABOVE VERTICAL REINFORCING OR RETAINING HEIGHT AT RETAINING CONDITION WHICH EVER IS GREATER.
11. VERTICAL WALL REINFORCING – SEE SCHEDULE.
12. 3'-0" MAX RETAINING WHERE OCCURS.
13. AT RETAINING CONDITIONS PROVIDE DRAINAGE PER SOILS REPORT.
14. LADDER WIRE REINFORCING SEE DETAIL 8.
15. 2" SOIL MIN OVER FOOTING.
16. #4 CONTINUOUS IN 8" DEEP BOND BEAM AT TOP OF SOIL AT RETAINING CONDITIONS AS OCCURS. NO BOND BEAM IS REQUIRED AT TOP OF CMU PER NOTE 6 IN THIS CASE.

NOTE:
A. NO SURCHARGES WITHIN 6'-0" OF WALL ARE ALLOWED. SURCHARGES INCLUDE, BUT ARE NOT LIMITED TO, HOUSE FOUNDATIONS, DRIVEWAYS, FENCE WALLS WITHIN 6'-0" OF FACE OF WALL AND SOIL BACKFILL OVER 4:1 SLOPE.
B. CONVENTIONAL MASONRY STEM REQUIRES SPECIAL INSPECTION PER GENERAL NOTE 19.
C. MORTAR SHALL NOT BE USED IN LIEU OF GROUT IN THIS DETAIL ONLY.

8 HORIZONTAL JOINT REINFORCING

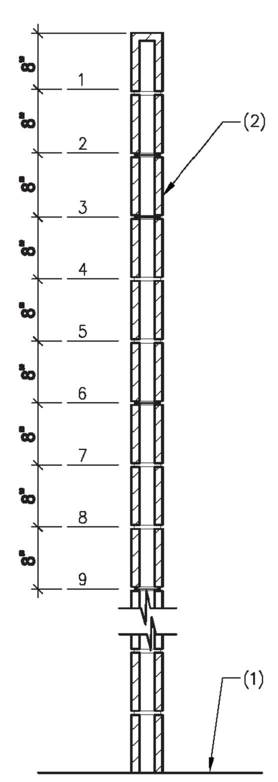

NOTES:
1. TOP OF FOOTING.
2. PROTO II WALL – VERTICAL POST TENSIONED ROD NOT SHOWN FOR CLARITY.
3. 8" HIGH COURSES ARE SHOWN IN DETAIL. OTHER BLOCK SIZES MAY BE USED AS REQUIRED BY THE FENCE WALL DESIGN.

HORIZONTAL JOINT REINFORCING (REF. GENERAL NOTE #12).
1. HORIZONTAL JOINT REINFORCING SHALL BE PLACED AT THE MORTAR JOINTS #2 & #3 BELOW THE PLATE WASHER AND 2'-0" O.C. THEREAFTER UNTIL THE TOP OF FOOTING IS REACHED. (e.g. A NOMINAL 6'-0" HIGH WALL WOULD HAVE JOINT REINFORCING IN A TOTAL OF THREE COURSES).

NO SCALE

5 TOP OF FENCE DETAIL

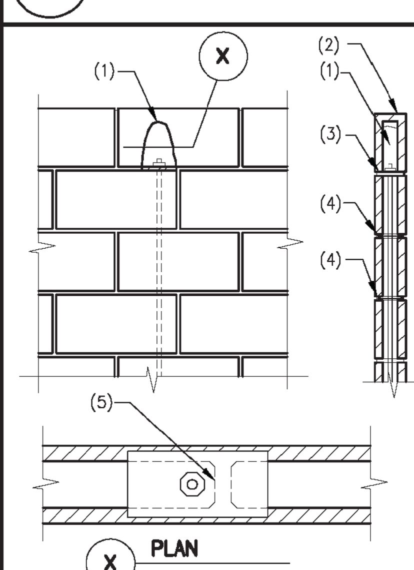

NOTES:
1. FILL CAP BLOCK WITH MORTAR. IMMEDIATELY "FLIP" ONTO ROD. COMPLETELY COVER NUT, ROD AND PLATE WITH MORTAR
2. CAP BLOCK OF SUFFICIENT SIZE TO COVER PLATE AND ROD.
3. STEEL PLATE SIZES:
A. 6" PROTO II: 1/4" x 4 1/2" x 6"
B. 6" SLUMP PROTO II: 1/4" x 4" x 6"
STEEL PLATES TO BE PLACED AT THE EDGE OF THE CELL SO THAT THE PLATE BEARS FULLY ON THREE SIDES EXCEPT AT 8" PROTO II WHERE THE STEEL PLATE SHOULD BEAR ON ALL FOUR SIDES.
4. CONTINUOUS HORIZONTAL JOINT REINFORCING PER GENERAL NOTE #12.
5. CENTER WEB BELOW.

NO SCALE

6 FOOTING ELEVATION AT POST TENSIONED ROD

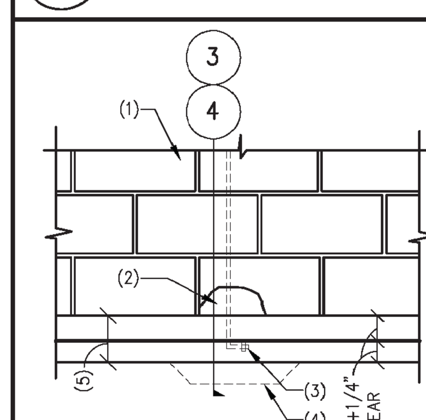

NOTES:
1. PROTO II WALL.
2. 3" MORTAR COVER AROUND COUPLER AND/OR POST TENSIONED ROD FOR CORROSION PROTECTION.
3. 7/16" DIA FULL HEIGHT POST TENSIONED RODS WITH 3" HOOKS. ROLL THREADS AT TOP OF WALL AFTER NUT ATTACHMENT. NO VOIDS OR JUNCTION OF POST TENSION ROD AND REINF. BARS ALLOWED. PROVIDE CONSOLIDATION OF CONCRETE VIA VIBRATION, RODDING OR OTHER APPROPRIATE MEANS.
4. THICKEN FOOTING TO PROVIDE 3" MIN. COVER AS REQUIRED AROUND ANCHOR BOLT.
5. SEE SCHEDULE AND OTHER DETAILS.

NO SCALE

GENERAL NOTES

1. SOIL SHALL BE FIRM AND COMPACTED PRIOR TO PLACEMENT OF CONCRETE. PRIOR TO FOUNDATION EXCAVATION, CONTRACTOR SHALL VERIFY VIA SOILS REPORT THAT SITE SOILS CONDITIONS MEET OR EXCEED AN ALLOWABLE PASSIVE BEARING PRESSURE OF 200 PSF/FT STARTING AT THE TOP OF GRADE(I.E. NO TOP SOILS ARE NEGLECTED FOR PASSIVE) AND A MINIMUM ALLOWABLE BEARING PRESSURE OF 1000 PSF.
2. THESE DESIGNS ARE TO BE USED FOR RETAINING EARTH (4:1 MAX BACKFILL) AS MEASURED FROM LOW SOIL TO HIGH SOIL ONLY PER DETAIL 10. NO SURCHARGES WITHIN 6'-0" OF WALL ARE ALLOWED.
3. FOOTINGS TO BE LEVEL. IF GROUND SLOPES THE FOOTING SHALL BE STEPPED. EACH STEP SHOULD BE PROPER HEIGHT TO FIT BLOCK TYPE USED. ALL EXCAVATIONS SHOULD BE CLEAN AND CONTAIN NO LOOSE EARTH OR FOREIGN MATTER.
4. THE PROTO-II WALL IS DESIGNED FOR WIND AND SEISMIC FORCES AS REQUIRED AND APPROVED BY THE LOCAL JURISDICTION. SEE SCHEDULES FOR EXPOSURE, WIND FORCES, POST TENSIONED ROD SPACING, FOOTING SIZES, ETC. CONTRACTOR IS RESPONSIBLE TO VERIFY REQUIREMENTS WITH BUILDING DEPARTMENT AND OWNER. ALL WORK IS TO BE PERFORMED IN ACCORDANCE WITH THE APPROVED SITE PLAN SOILS REPORT AND/OR APPLICABLE CODE REQUIREMENTS.
5. SOIL SHALL BE WELL DRAINED FOR FOOTINGS AND FOUNDATIONS. USE CONCRETE WITH A MIN. STRENGTH OF 2,500 PSI – TYPE II CEMENT (TYPE V WHERE REQUIRED BY OWNER, SOILS ENGINEER OR JURISDICTION). CONCRETE SHALL BE A MIN. OF 48 HOURS OLD PRIOR TO FINAL TENSIONING.
6. LAP REINFORCING STEEL: LAP = 26" FOR #4 BARS 40" FOR #5 BARS IN MASONRY. 32"/39" LAP IN CONCRETE FOR #4 OR #5 BAR RESPECTIVELY.
7. CONCRETE MASONRY UNITS SHALL COMPLY WITH ASTM C-90 AND BE 2,000 PSI MIN. (f'M DESIGN CRITERIA FOR BLOCK IS BASED ON 2000 PSI). BLOCK SHALL BE A MIN OF 7 DAYS OLD PRIOR TO ROD TENSIONING. STANDARD HEAD AND BED JOINT BLOCKS WITH MORTAR MAY BE USED OR INTERLOCKING BLOCKS MAY BE USED.
8. MORTAR SHALL BE TYPE S, 2000 PSI MIN. MORTAR MAY BE USED AS GROUT IN 8" HIGH LIFTS, EXCEPT 8. AT DETAIL 10 WHERE GROUT MUST BE USED. MORTAR MUST BE A MIN. OF 4 HOURS OLD PRIOR TO INITIAL TENSIONING AND 24 HOURS OLD PRIOR TO FINAL TENSIONING. GROUT SHALL BE 2000 PSI PER THE LATEST EDITION OF ACI 530. MECHANICALLY VIBRATE GROUT IMMEDIATELY AFTER PLACEMENT.
9. FIRST MASONRY COURSE MAY BE SET IN FRESH CONCRETE FOOTING.
10. REINFORCING REBAR SHALL CONFORM TO ASTM A615; Fy = 40,000 PSI.
11. PROTO-II HARDWARE IS DEFINED AS: TENSION RODS, BEARING PLATES, COUPLERS, NUTS, ALL THREADS, DIRECT TENSION INDICATORS (A DIRECT TENSION INDICATOR (DTI) IS A COMPRESSIBLE WASHER) AND PLASTIC SADDLES. ALL OF THIS HARDWARE SHALL BE SUPPLIED BY ONLY AN APPROVED PROTO-II LICENSEE TO THE CERTIFIED INSTALLER. POST TENSION RODS SHALL BE 7/16" DIAMETER WITH 1/2" ROLL THREADS CONFORMING TO ASTM A641 (FY = 60000 PSI) AND HAVE STEEL CHEMISTRY SO THAT BENDING AND THREADING CAN BE ACCOMPLISHED WITHOUT DAMAGE TO THE POST TENSION ROD. AREA OF POST TENSION ROD = .1503 SQUARE INCHES. BEARING PLATES ARE 1/4" THICK (Fy=50 KSI) SEE DETAIL 5 FOR WIDTHS. 1/2" COUPLERS PER ASTM A563 GRADE A, AND THE COUPLER MUST FULLY ENGAGE THE UPPER AND LOWER ROD. FULLY ENGAGED IS DEFINED AS 1/2" MIN INTO COUPLER. 1/2" NUTS ARE TO BE GRADE 8, PER ASTM A325. 1/2" ALL THREADS PER ASTM A307, GRADE 60. DIRECT TENSION INDICATOR (DTI – COMPRESSIBLE WASHER) IS MANUFACTURED PER ASTM F959. PLASTIC REBAR SADDLES ARE NON-STRUCTURAL.
12. HORIZONTAL JOINT REINFORCING SHALL BE 9 GAGE DIAMETER WIRE AND PLACED PER DETAIL 8 AND CONFORM TO ASTM A82 LADDER TYPE, 9 GAGE DIAMETER. LAP JOINT REINFORCING ONE FULL CROSS SQUARE (6" MINIMUM LAP).
13. IN LIEU OF FULL HEIGHT RODS, CONTRACTOR MAY USE SHORTER RODS, 1/2" COUPLERS AND STRAIGHT RODS THREADED BOTH ENDS FOR ADDITIONAL LIFTS. MIN. OF 3" "L" HOOK, WITH 1/2" NUT AT END OF TENSION ROD.
14. VERTICAL CONTROL JOINTS TO BE PLACED AT MAX. 36' O.C. IN ALL NON-STUCCOED WALLS AND 20' ON CENTER IN STUCCOED WALLS WITH CLEAN VERTICAL BREAK OF ALL MATERIALS. SEE DETAIL 1 FOR ROD SPACING AT CONTROL JOINTS AND WALL ENDS.
15. NO COUPLERS MAY OCCUR DIRECTLY BELOW AND IN CONTACT WITH THE BEARING PLATE.
16. TENSION RODS MAY BE STABBED INTO WET CONCRETE OR TIED IN PLACE AT CONTRACTOR OPTION; SEE DETAIL 6, NOTE NO. 3. AT CONTRACTOR OPTION, VERTICAL REBAR MAY BE STABBED DOWN INTO THE DIP, SEE DETAILS 3 AND 4.
17. A PROTO-II DTI (COMPRESSIBLE WASHER) SHALL BE INSTALLED AT EVERY TENSION ROD BETWEEN THE BEARING PLATE AND NUT W/ THE DTI "TABS" FACING UP AGAINST THE BOTTOM OF THE NUT. THE SPECIAL DEPUTY INSPECTION REQUIRED AT TIME OF FINAL TENSIONING BY A DEPUTY INSPECTOR SHALL VERIFY FINAL TENSIONING TO 6,000 POUNDS BY 1 OF 2 METHODS; METHOD 1; VISUAL INSPECTION OF DIRECT TENSION INDICATOR (DTI), TABS FACING UP AND COLLAPSED AGAINST NUT WITH NO LIGHT LEAKAGE BETWEEN THE PROTO-II DTI AND BOTTOM OF NUT; METHOD 2: USE OF A CALIBRATED TORQUE WRENCH TORQUED TO 55 FT-LBS. (DTI MUST STILL BE PLACED WITH METHOD 2. NO VISUAL INSPECTION OF DTI REQUIRED WHEN USING METHOD 2). INSPECTOR SHALL OBSERVE THE USE OF THREAD LUBRICANT, THE POSITION OF PLATE ON BLOCK, AND INTEGRITY OF MORTAR JOINTS. AND PROVIDE A SIGNED REPORT TO ALL APPROPRIATE PARTIES. MASONRY DESIGN IS BASED ON THIS SPECIAL INSPECTION.
18. POST TENSION ROD SPACING IS INDEPENDENT OF DIP OR PIER SPACING. POST TENSION ROD SPACING TOLERANCE IS ±8" BUT THE NUMBER OF RODS FOR A GIVEN LENGTH OF WALL MUST REMAIN THE SAME.
19. ALL CONVENTIONALLY REINFORCED MASONRY AND PILASTERS REQUIRE SPECIAL INSPECTION. SPECIAL INSPECTION INCLUDES A PRE-GROUT INSPECTION. THE PRE-GROUT INSPECTION INCLUDES VERIFICATION OF THE LOCATION OF STRUCTURAL ELEMENTS, GRADE OF REINFORCEMENT AND OVERALL WORKMANSHIP AND QUALITY OF MATERIALS BEING USED, FOR CONFORMANCE WITH CONSTRUCTION DOCUMENTS.
20. END ZONES FOR WIND DESIGNS ARE EXCLUDED. I.E. Cf = 1.3.

2 DTI INDICATOR (DIRECT TENSION INDICATOR)

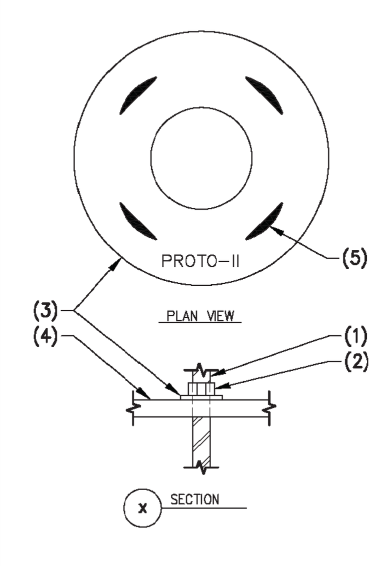

NOTES:
1. POST TENSION ROD.
2. NUT.
3. COMPRESSED DTI INDICATOR – NO LIGHT PASSES BETWEEN BOTTOM OF NUT AND DTI WHEN PROPERLY TENSIONED.
4. TOP PLATE.
5. COLLAPSIBLE TABS.
6. MINIMUM TENSION TO BE 6,000 LBS LOAD AND CONFIRMED BY ONE OF TWO METHODS PER NOTE "C" BELOW.

A. PROTO-II DTI TO BE USED AT EACH TENSION ROD, TABS FACING UP AGAINST BOTTOM OF 1/2" NUT AND TABS COLLAPSED TO ACHIEVE TENSION.
B. DTI IS ONE OF TWO APPROVED METHODS OF TENSIONING. OTHER OPTION OF TENSIONING IS TORQUE TO 55 FT-LBS USING A CALIBRATED TORQUE WRENCH DTI MUST STILL BE PLACED ON ROD IF USING TORQUE WRENCH METHOD. SEE GENERAL NOTE 17.
C. SPECIAL DEPUTY INSPECTOR WILL PERFORM A VISUAL INSPECTION WHEN USING THE DTI METHOD TO CONFIRM THE DTI IS COLLAPSED WITH NO LIGHT LEAKS BETWEEN THE TABS AND BOTTOM OF NUT. IF USING TORQUED WRENCH METHOD, DEPUTY INSPECTOR WILL CONFIRM WALL IS TORQUED TO 55 FT-LBS AND VISUAL INSPECTION OF DTI IS NOT REQUIRED.
D. INSTALLER MUST HAVE SPECIAL DEPUTY INSPECTION PERFORMED BY ONE OF THESE TWO METHODS, BY A SPECIAL DEPUTY INSPECTOR. INSPECTOR TO PROVIDE A COMPLETED REPORT TO LISTED PARTIES.

NO SCALE

3 TYPICAL WALL SECTION AT DIP FOOTING AND TRENCH FOOTING

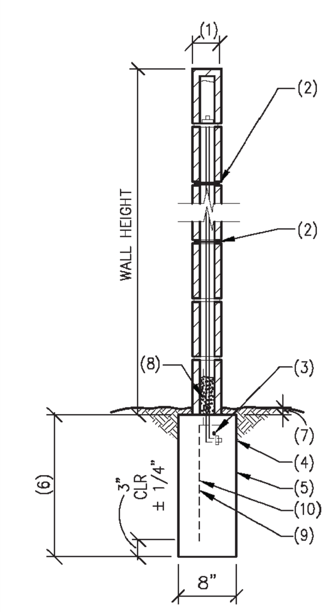

NOTES:
1. 6" NOMINAL (5 5/8" ACTUAL)
2. HORIZONTAL JOINT REINF – SEE GENERAL NOTE #12.
3. #4 CONTINUOUS AT 4" & 6" PROTO II
#5 CONTINUOUS AT 8" PROTO II.
4. CONCRETE SETTING PAD. NO VOIDS OR HONEYCOMBING OF CONCRETE AT JUNCTION OF POST TENSION ROD AND REINF. BARS ALLOWED. PROVIDE CONSOLIDATION OF CONCRETE VIA VIBRATION, RODDING OR OTHER APPROPRIATE MEANS.
5. LINE OF CONTINUOUS TRENCH FOOTING.
6. DEPTH OF CONTINUOUS TRENCH FOOTING.
7. 2" SOIL MIN OVER FOOTING.
8. 3" MORTAR COVER AROUND COUPLER AND/OR POST TENSIONED ROD FOR CORROSION PROTECTION AT FIRST COURSE.
9. • FOR 6'-8" HIGH FENCE WITH TRENCHES, USE #4 VERTICAL WITH STANDARD HOOK AT 48" O.C. – CENTER BAR IN FOOTING.
• FOR 6'-8" HIGH FENCE WITH DIP/PIER, USE 1 #4 WITH STANDARD HOOK CENTERED IN EACH DIP/PIER.
• TURN REINFORCING INTO FOOTING AS REQUIRED TO PROVED 3" CLEAR COVER.
• NO VERTICAL REINFORCING REQUIRED IN FOOTINGS FOR WALLS 6'-0" AND UNDER.
10. A CONTRACTOR OPTION IS TO STAB THE #4 VERTICAL REBAR DOWN INTO THE DIP, PIER OR CONTINUOUS TRENCH FOOTING AND EXTEND IT +/-8" INTO THE FIRST COURSE OF BLOCK.

NO SCALE

PROTO II FENCE WALL SCHEDULE – PER 2014 COUNTY OF LOS ANGELES BUILDING CODE, 2013 CBC AND 2012 IBC

EXPLANATION OF WIND LOAD DESIGNATIONS:

ASCE 7-10
qz = 0.00256 x Kz x Kzt x Kd x V^2 (EQ. 29.3-1)
Kz = 0.57 EXP B, 0.85 EXP C (TABLE 29.3-1)
Kzt = 1.0 FOR H ≤ 15'-0" (SECTION 26.8.2)
Kd = 0.85 (SIMILAR TO SOLID SIGN, TABLE 26.6-1)
V = VELOCITY 3 SECOND WIND GUST

RISK CATEGORY = I (MINOR STRUCTURES)
F = qz x G x Cf x Af (EQN 29.4-1)
G = 0.85 (RIGID STRUCTURE SEC 26.9)
*Cf = 1.3 x 1.1 (FOR S/H = 1 AND B/S ≥ 10)
As = ASSUME 1 SQUARE FOOT.

• 1.1 MULTIPLIER USED TO ADJUST FOR OBLIQUE ADJUSTMENT FACTOR PER FIGURE 29.4-1 FOOTNOTE 3.

EXPLANATION OF SEISMIC LOAD DESIGNATIONS:

Ss = 2.0 (ASSUMED)
S1 = 0.749 (ASSUMED)
SOIL SITE CLASS = D (ASSUMED)
RISK CATEGORY = I (TABLE 1.5-1)
R = 3 (TABLE 15.4-2)

Fa = 1.0 (TABLE 11.4-1)
Sms = 2 (EQ. 11.4-1)
Sds = 1.33 (EQ. 11.4-3)
Cs = 0.44 (EQ. 12.8.2)

WALL / FOOTING SCHEDULES

FENCE WALLS 6'-8" AND UNDER (SEE DETAIL 3)

WIND FORCE	WALL HEIGHT	6" PROTO II POST TENSION ROD SPACING ON CENTER	CONTINUOUS TRENCH FOOTING DEPTH * SEE DETAIL 3 FOR SECTION
17.6 PSF	3'-4"	8'-0"	19"
100 MPH	4'-0"	8'-0"	21"
EXP C	4'-8"	8'-0"	23"
"FOR SITE /	5'-4"	8'-0"	25"
PERIMETER	6'-0"	6'-0"	26"
FENCING"	6'-8"	6'-0"	33"

FENCE WALLS OVER 6'-8" & MINOR RETAINING WALLS WITH FENCES (SEE DETAIL 10)

	TOTAL WALL HEIGHT	6" CONVENTIONAL CMU HEIGHT	CENTERED VERTICAL REBAR	6" PROTO II HEIGHT	PT ROD SPACING	FENCE WALL TRENCH FOOTING DEPTH (NO RETAINING)	RETAINING WITH FENCE ABOVE TRENCH FOOTING DEPTH
THIS SHEET IS FOR USE WITH ALL LOCATIONS THAT REQUIRE PLAN CHECK, PERMITS & INSPECTIONS BY THE COUNTY OF LOS ANGELES.	7'-4"	2'-0"	#5 AT 32" O.C	5'-4"	6'-0"	36"	41"
	8'-0"	2'-0"	#5 AT 24" O.C	6'-0"	6'-0"	38"	42"
	8'-8"	2'-8"	#5 AT 16" O.C	6'-0"	6'-0"	39"	44"
	9'-4"	3'-4"	#5 AT 8" O.C	6'-0"	6'-0"	41"	45"

* TRENCH FOOTING DEPTH ADJUSTMENT (AT CONTRACTOR'S OPTION):

AT THE CONTRACTOR'S OPTION, UP TO ONE COURSE OF MASONRY MAY BE BURIED BELOW GRADE. THE BURIED BLOCK MAY BE USED AS PART OF THE TRENCH DEPTH PROVIDED THE SOIL WITHIN 5'-0" OF EACH SIDE OF THE BLOCK IS COMPACTED TO 90 PERCENT OR PER SOILS RECOMMENDATIONS. THE OVERALL WALL HEIGHT IS DEFINED AS SHOWN IN DETAIL 3, FROM THE TOP OF THE FOOTING TO THE TOP OF THE WALL REGARDLESS OF WHETHER A COURSE IS BURIED.

PROTO-II™ STANDARD PLAN
COUNTY OF LOS ANGELES
(THIS PRODUCT DATA SHEET IS FOR USE AT ALL LOCATIONS THAT REQUIRED PLAN CHECK, PERMITS AND INSPECTIONS BY COUNTY OF LOS ANGELES.)

SPECIAL NOTES – COUNTY OF LOS ANGELES

1. BEARING PLATES TO BE 6" LONG AND BEAR ON THREE SIDES OF BLOCK.
2. DEPUTY INSPECTOR TO VERIFY RODS AND COUPLERS ARE EITHER GALVANIZED OR COATED WITH ZINC BASE PAINT.
3. FOR LIQUEFIABLE OR COLLAPSIBLE SOILS, APPROVAL BY GEOTECHNICAL AND MATERIAL ENGINEERING DIVISION (OF L.A. COUNTY) SHALL BE REQUIRED.
4. FOR PROJECTS IN COUNTY OF LOS ANGELES THAT DO NOT REQUIRED PLAN CHECK, PERMITS OR INSPECTIONS, CONTACT PROTO II FOR APPROPRIATE ENGINEERING.

COUNTY OF LOS ANGELES
STANDARD PLAN # 26093-14

NOTE:
TO UTILIZE STANDARD PLAN 26093-14 A COMPLETE SITE SPECIFIC SOILS REPORT W/BORINGS WILL BE REQUIRED FOR EVERY PROJECT. THIS SOILS REPORT WILL BE SUBMITTED AND REVIEWED BY THE PROTO-II STRUCTURAL ENGINEER, WHO WILL INCORPORATE IT AS A PART OF THE WALL DESIGN. THE PROTO-II ENGINEER WILL VERIFY THAT THIS PLAN IS IN COMPLIANCE WITH ALL SOILS PARAMETERS. IF NOT IN COMPLIANCE WITH ANY VARIABLE, THEN THE PLAN WILL BE MODIFIED TO COMPLY WITH THE SITE SPECIFIC CONDITIONS, AND THIS REVISED PLAN WILL BE REVIEWED BY THE BUILDING DEPARTMENT.

SOIL DESIGN PARAMETERS

	PROTO-II DESIGN ASSUMPTIONS	SITE SPECIFIC DESIGN PARAMETERS
PASSIVE PRESSURE (PCF)	200	-
ACTIVE PRESSURE (PCF)	35	-
BEARING PRESSURE (PSF)	1000	-

BUILDING AND SAFETY DIVISION
Department of Public Works
APPROVED
UNDER LOS ANGELES COUNTY CODE
TITLES 26, 30 AND 31
CLLEE
PUBLIC WORKS
03/11/2014 4:48:14 PM
This set of plans and specifications must be kept at the job site at all times. It is unlawful to make any changes, modifications or alterations to these plans or specifications without the prior written permission of the Building Official. The stamping of this set of plans and specifications SHALL NOT, under any circumstances, be deemed to permit or to be an approval of any work or activity that violates any provisions of any County Ordinance or State Law.

STANDARD PLAN APPROVAL

CARUSO TURLEY SCOTT INC.
consulting structural engineers
1215 W. Rio Salado Pkwy
Suite 200
Tempe, Arizona 85281
(480) 774-1700
(480) 774-1701 FAX
www.ctsaz.com

REGISTERED PROFESSIONAL ENGINEER
C.J. ATKINSON
S 4055
3/7/14
STRUCTURAL
STATE OF CALIFORNIA

PROTO II FENCE WALL
PROTO II STANDARD PLAN, COUNTY OF LOS ANGELES
(THIS PRODUCT DATA SHEET IS FOR USE AT ALL LOCATIONS THAT REQUIRE PLAN CHECK, PERMITS AND INSPECTIONS BY THE COUNTY OF LOS ANGELES)

PROTO-II™ WALL SYSTEMS
WWW.PROTO2.COM
41800 CASCADES COURT
TEMECULA, CA 92591
ATTN: GARY OTTO
PH# (951) 694-3793
FAX# (951) 694-8741
U.S. PATENTED 5,794,921
U.S. PATENTED 6,431,797
U.S. PATENTED 6,632,048
U.S. PATENTED 7,188,453
U.S. PATENTED 7,454,870
U.S. PATENTED 7,461,487
4", 6", AND 8" THICK POST-TENSIONED MASONRY WALLS
(MAY ONLY BE INSTALLED BY APPROVED AND CERTIFIED INSTALLERS)

TRACKING NUMBERS: 13-115-8600
JOB NUMBER: 14-115-8800
DRAWN: NCR | ENGINEER: JAD
CHECKED: MRF | SCALE: AS NOTED
DATE: 01.29.2014
SHEET: 1 OF 1

FRANCO ARCHITECTS INC.
12345 Ventura Blvd. H
Studio City, CA 91604
Architecture and Planning
Tel 818 754-2030
Fax 818 754-2032

MAGNOLIA SCIENCE ACADEMY
18220 SHERMAN WAY, RESEDA, CA91335

REV	DESCRIPTION	DATE
	PLAN CHECK #1	6/14/2017

LICENSED ARCHITECT
JOHANN D. WANG
C27010
4/30/2019
RENEWAL DATE
STATE OF CALIFORNIA

PROJECT: MAGNOLIA SCIENCE ACADEMY
PROJECT ADDRESS: 18220 SHERMAN WAY, RESEDA, CA91335
DRAWING TITLE: PROTO WALL DETAILS LADBS
DRAWN BY:
ISSUE DATE: 6/14/2017
JOB NUMBER:
DRAWING SCALE: AS NOTED
APPROVED BY:
DRAWING NUMBER: D8.0